No. 60072
2nd Edition

# JVC Service Manual

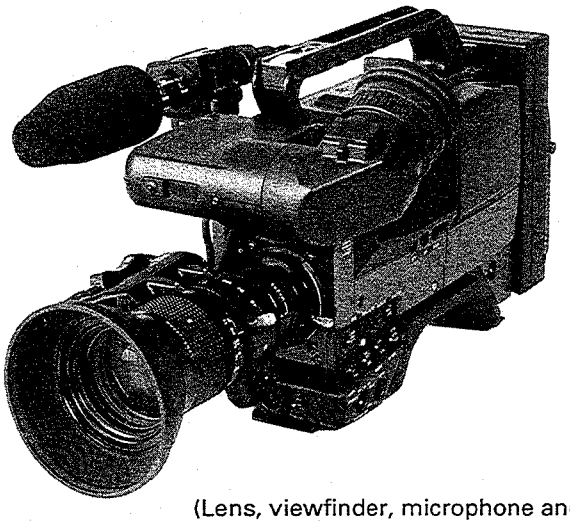

(Lens, viewfinder, microphone and camera adapter are optional)

MODEL **KY-27**

# TABLE OF CONTENTS


| Section | Title | Page |
|---|---|---|
| ■ | Important Safety Precautions | |
| ■ | Instructions | |
| 1. | NEW CIRCUITRY AND NEW TECHNOLOGY | 1 - 1 |
| 2. | SERVICE CAUTIONS AND DISASSEMBLY | 2 - 1 |
| 3. | ADJUSTMENT PROCEDURE | 3 - 1 |
| 4. | REPACKINGS | 4 - 1 |
| 5. | EXPLODED VIEWS AND PARTS LISTS | 5 - 1 |
| 6. | CHARTS AND DIAGRAMS | 6 - 1 |
| 7. | ELECTRICAL PARTS LIST | 7 - 1 |



COPYRIGHT © 1992 VICTOR COMPANY OF JAPAN, LTD.



Printed in Japan

# Important Safety Precautions

Prior to shipment from the factory, JVC products are strictly inspected to conform with the recognized product safety and electrical codes of the countries in which they are to be sold. However, in order to maintain such compliance, it is equally important to implement the following precautions when a set is being serviced.

## ● Precautions during Servicing

1. Locations requiring special caution are denoted by labels and inscriptions on the cabinet, chassis and certain parts of the product. When performing service, be sure to read and comply with these and other cautionary notices appearing in the operation and service manuals.

2. Parts identified by the ⚠ symbol and shaded (▒) parts are critical for safety.
   Replace only with specified part numbers.
   **Note: Parts in this category also include those specified to comply with X-ray emission standards for products using cathode ray tubes and those specified for compliance with various regulations regarding spurious radiation emission.**

3. Fuse replacement caution notice.
   Caution for continued protection against fire hazard.
   Replace only with same type and rated fuse(s) as specified.

4. Use specified internal wiring. Note especially:
   1) Wires covered with PVC tubing
   2) Double insulated wires
   3) High voltage leads

5. Use specified insulating materials for hazardous live parts. Note especially:
   1) Insulation Tape
   2) PVC tubing
   3) Spacers
   4) Insulation sheets for transistors
   5) Barrier

6. When replacing AC primary side components (transformers, power cords, noise blocking capacitors, etc.) wrap ends of wires securely about the terminals before soldering.

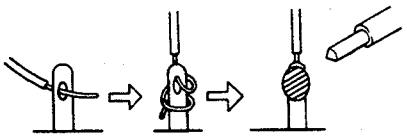

Fig. 1

7. Observe that wires do not contact heat producing parts (heat-sinks, oxide metal film resistors, fusible resistors, etc.)

8. Check that replaced wires do not contact sharp edged or pointed parts.

9. When a power cord has been replaced, check that 10–15 kg of force in any direction will not loosen it.

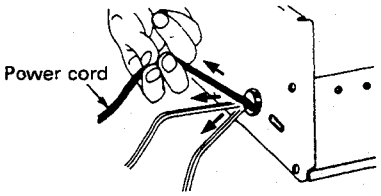


Fig. 2

10. Also check areas surrounding repaired locations.

11. Products using cathode ray tubes (CRTs)
    In regard to such products, the cathode ray tubes themselves, the high voltage circuits, and related circuits are specified for compliance with recognized codes pertaining to X-ray emission. Consequently, when servicing these products, replace the cathode ray tubes and other parts with only the specified parts. Under no circumstances attempt to modify these circuits. Unauthorized modification can increase the high voltage value and cause X-ray emission from the cathode ray tube.

12. Crimp type wire connector
    In such cases as when replacing the power transformer in sets where the connections between the power cord and power transformer primary lead wires are performed using crimp type connectors, if replacing the connectors is unavoidable, in order to prevent safety hazards, perform carefully and precisely according to the following steps.
    1) **Connector part number** : E03830-001
    2) **Required tool** : Connector crimping tool of the proper type which will not damage insulated parts.
    3) **Replacement procedure**
       (1) Remove the old connector by cutting the wires at a point close to the connector.
       Important : Do not reuse a connector (discard it).

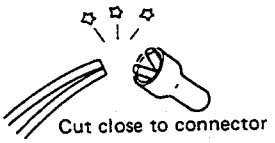


Fig. 3

(2) Strip about 15 mm of the insulation from the ends of the wires. If the wires are stranded, twist the strands to avoid frayed conductors.

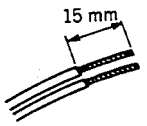


Fig. 4

(3) Align the lengths of the wires to be connected. Insert the wires fully into the connector.

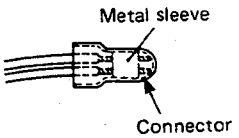


Fig. 5

(4) As shown in Fig. 6, use the crimping tool to crimp the metal sleeve at the center position. Be sure to crimp fully to the complete closure of the tool.

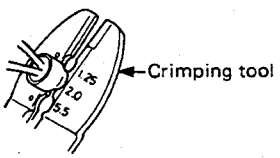


Fig. 6

(5) Check the four points noted in Fig. 7.

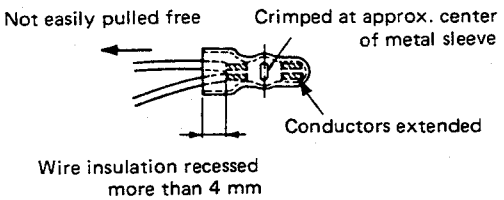


Fig. 7

## ● Safety Check after Servicing

Examine the area surrounding the repaired location for damage or deterioration. Observe that screws, parts and wires have been returned to original positions, Afterwards, perform the following tests and confirm the specified values in order to verify compliance with safety standards.

**1. Insulation resistance test**

Confirm the specified insulation resistance or greater between power cord plug prongs and externally exposed parts of the set (RF terminals, antenna terminals, video and audio input and output terminals, microphone jacks, earphone jacks, etc.). See table 1 below.

**2. Dielectric strength test**

Confirm specified dielectric strength or greater between power cord plug prongs and exposed accessible parts of the set (RF terminals, antenna terminals, video and audio input and output terminals, microphone jacks, earphone jacks, etc.). See table 1 below.

**3. Clearance distance**

When replacing primary circuit components, confirm specified clearance distance (d), (d') between soldered terminals, and between terminals and surrounding metallic parts. See table 1 below.

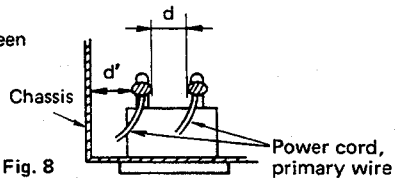


Fig. 8

**4. Leakage current test**

Confirm specified or lower leakage current between earth ground/power cord plug prongs and externally exposed accessible parts (RF terminals, antenna terminals, video and audio input and output terminals, microphone jacks, earphone jacks, etc.).

**Measuring Method:** (Power ON)

Insert load Z between earth ground/power cord plug prongs and externally exposed accessible parts. Use an AC voltmeter to measure across both terminals of load Z. See figure 9 and following table 2.

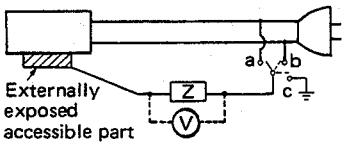


Fig. 9

**5. Grounding (Class I model only)**

Confirm specified or lower grounding impedance between earth pin in AC inlet and externally exposed accessible parts (Video in, Video out, Audio in, Audio out or Fixing screw etc.).

**Measuring Method:**

Connect milli ohm meter between earth pin in AC inlet and exposed accessible parts. See figure 10 and grounding specifications.

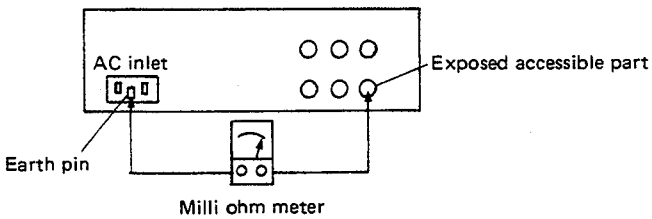


Fig. 10

**Grounding Specifications**

| Region | Grounding Impedance (Z) |
|---|---|
| USA & Canada | Z ≦ 0.1 ohm |
| Europe & Australia | Z ≦ 0.5 ohm |

| AC Line Voltage | Region | Insulation Resistance (R) | Dielectric Strength | Clearance Distance (d), (d') |
|---|---|---|---|---|
| 100 V | Japan | R ≧ 1 MΩ/500 V DC | AC 1 kV 1 minute | d, d' ≧ 3 mm |
| 100 to 240 V | | | AC 1.5 kV 1 minute | d, d' ≧ 4 mm |
| 110 to 130 V | USA & Canada | – | AC 900 V 1 minute | d, d' ≧ 3.2 mm |
| 110 to 130 V<br>200 to 240 V | Europe & Australia | R ≧ 10 MΩ /500 V DC | AC 3 kV 1 minute (Class II)<br>AC 1.5 kV 1 minute (Class I) | d ≧ 4 mm<br>d' ≧ 8 mm (Power cord)<br>d' ≧ 6 mm (Primary wire) |

**Table 1** Specifications for each region

| AC Line Voltage | Region | Load Z | Leakage Current (i) | a, b, c |
|---|---|---|---|---|
| 100 V | Japan | 1 kΩ | i ≦ 1 mA rms | Exposed accessible parts |
| 110 to 130 V | USA & Canada | 0.15 μF, 1.5 kΩ | i ≦ 0.5 mA rms | Exposed accessible parts |
| 110 to 130 V<br>220 to 240 V | Europe & Australia | 2 kΩ | i ≦ 0.7 mA peak<br>i ≦ 2 mA dc | Antenna earth terminals |
| | | 50 kΩ | i ≦ 0.7 mA peak<br>i ≦ 2 mA dc | Other terminals |

**Table 2** Leakage current specifications for each region

**Note:** These tables are unofficial and for reference only. Be sure to confirm the precise values for your particular country and locality.

# JVC Instructions

## THREE CCD COLOR VIDEO CAMERA

# KY-27

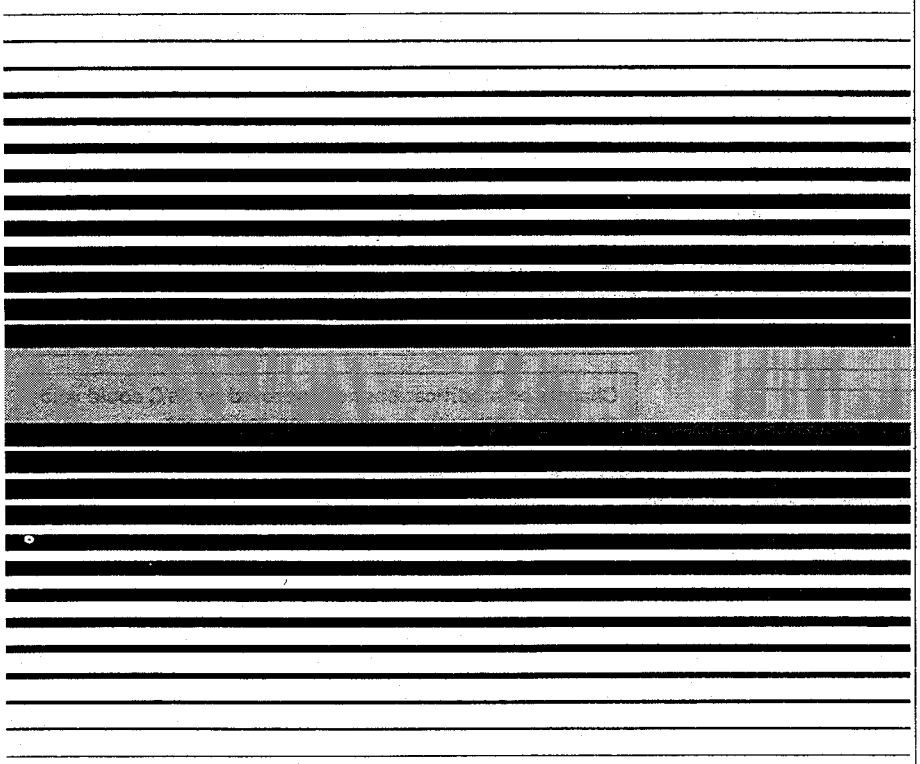

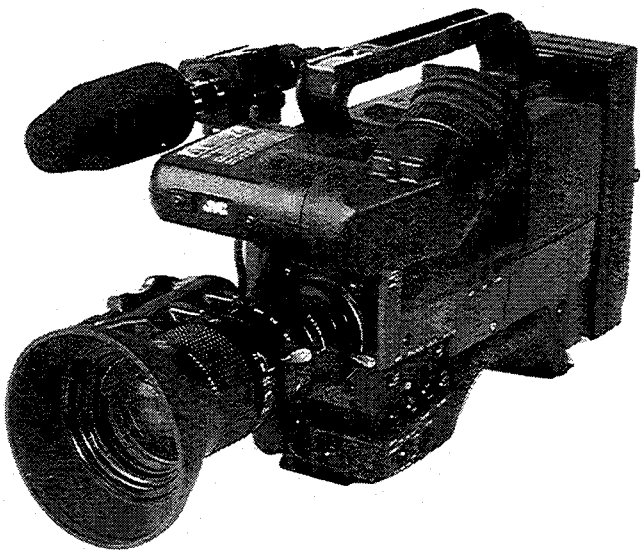

Photo shows the KY-27CH video camera with an optional camera adapter (KA-27), viewfinder (VF-P115), and lens (A14×10 BRM12)

**1.1 QUICK USE GUIDE**


| | Diagram# | Page |
|---|---|---|
| CONTENTS | | 3 |
| INDEX | | 5 |
| BASIC OPERATION | | 32, 35 |
| VTR OPERATION | | |
| Docked | | 62 |
| Portable | | 66 |
| FEATURES | | 12, 13 |
| WARNINGS | | 26, 27 |
| TROUBLESHOOTING | | 41 |
| INSTALLATION, ATTACHMENT | | 71 |
| CONTROLS | | 16 |
| APERTURE PRIORITY/ALC | 9 | 18, 51, 58 |
| AUDIO LEVEL INDICATION | 10 | 18, 28 |
| BARS/CAMERA | 11 | 18, 61 |
| BACK FOCUS | Lens 4 | 30, 37 |
| BLACK BALANCE | 19 | 20, 46, 47 |
| CAMERA SETUP | 13, 14 | 18, 19, 57–59 |
| FILTER TURRET | 16 | 20, 45 |
| FULL AUTO SHOOTING | 6 | 17, 55 |
| FULL TIME AUTO WHITE | 12 | 18, 44, 57 |
| GAIN | 9 | 18, 51, 58 |
| GENLOCK PHASE | 27, 32 | 22, 68 |
| IRIS | | |
| Detection Mode | 13, 14 | 18, 20, 53, 57 |
| Manual/Auto | Lens 6 | 30, 54 |
| Override | 5 | 17, 54 |
| LENS | | 30, 37, 45, 59, 60, 74 |
| LOLUX GAIN | 7 | 17, 52 |
| MIC STEREO/MONO | 26 | 22, 36, 75 |
| MIC CAMERA/ADAPTER | 41 | 24, 36, 75 |
| OPERATE | 2 | 17, 35, 62–65 |
| OUTPUT SIGNALS | 26, 42–45 | 22–24, 36, 66, 68, 69 |
| POWER | 1, 2 | 34, 64 |
| RESET ACCUM. REC TIME | 13 | 18, 57 |
| RESET TO DEFAULT | | |
| CAMERA SETUP/FUNCTIONS | | 59 |
| RETURN VIDEO | 25 | 22, 65 |
| SAFETY ZONES | 10 | 18, 19, 59 |
| SET, UP, DOWN | 13, 14 | 18, 19, 48, 49, 57, 59 |
| SHUTTER | 8 | 17, 48, 49 |
| STATUS DISPLAY | 10 | 18, 28 |
| VARIABLE SCAN | 8 | 17, 49 |
| VIDEO LEVEL INDICATION | 20 | 20, 59 |
| VTR TRIGGERS | 4, Lens 10 | 17, 30, 70 |
| WHITE BALANCE | 19 | 20, 38, 44 |
| WHITE BALANCE MEMORIES | 12 | 18, 44, 57 |
| ZEBRA | 20 | 20, 59 |
| ZOOM, Auto, Manual | Lens 8, 12 | 30, 31 |
| CAMERA/COMPUTER CONTROL | | 68–70 |
| GENLOCK | | 68 |
| TRIPOD BASE | | 40 |


**For Customer Use:**
Enter below the Serial No. which is located on the top frame. Retain this information for future reference.

Model No. KY-27

Serial No.

The lightning flash with arrowhead symbol, within an equilateral triangle is intended to alert the user to the presence of uninsulated "dangerous voltage" within the product's enclosure that may be of sufficient magnitude to constitute a risk of electric shock to persons.

The exclamation point within an equilateral triangle is intended to alert the user to the presence of important operating and maintenance (servicing) instructions in the literature accompanying the appliance.

**Due to design modifications, data given in this instruction book are subject to possible change without prior notice.**

**WARNING:**
**TO PREVENT FIRE OR SHOCK HAZARD, DO NOT EXPOSE THIS UNIT TO RAIN OR MOISTURE.**

**AVERTISSEMENT:**
**POUR EVITER LES RISQUES D'INCENDIE OU D'ELECTROCUTION, NE PAS EXPOSER L'APPAREIL A L'HUMIDITE OU A LA PLUIE.**

## POWER SYSTEM

This color video camera should be used with 12 V DC only.

**CAUTION:**

To prevent electric shocks and fire hazards, do NOT use other than specified power source.

## Système d'alimentation

Cette caméra vidéo couleur ne doit étre utilisée que sur tension continue de 12 V.

**Attention:**

Pour éviter tout risque d'incendie ou d'électrocution, n'utilisez aucune autre source d'alimentation.

## Information for Canada

This product complies with D.O.C. limits (C.R.C., C. 1374) pertaining to class B digital apparatus.

## Renseignement pour Canada

Ce produit est conforme aux normes du M.D.C. (C.R.C., ch. 1374) s'appliquant aux appareils numériques de classe B.

**Changes or modifications not approved by JVC could void the user's authority to operate the equipment.**

# GUIDES 1

There are three guides to help you find important information as quickly as possible.

Section 1.1 is the **Quick Use Guide** for the cover for the most important information in an emergency. The feature number in the camera diagrams and the topic page are listed.

Section 1.2 is a detailed **Table of Contents.**

Section 1.3 is an **Alphabetical Index** to speed the search of detailed topics.

# CONTENTS 1.2


**SAFETY** ..... 2

**CHAPTER 1 GUIDES** ..... 3

**1. 1 QUICK USE GUIDE** ..... 1

**1. 2 CONTENTS** ..... 3

**1. 3 INDEX (Alphabetical)** ..... 6

**CHAPTER 2 GENERAL FEATURES AND FUNCTIONS** ..... 8

**2. 1 INTRODUCTION** ..... 8

**2. 2 PRECAUTIONS** ..... 9
- 2. 2. 1 Safety ..... 9
- 2. 2. 2 Installation ..... 9
- 2. 2. 3 Handling Precautions ..... 9
- 2. 2. 4 Protection and Performance of the CCDs. .. 10
- 2. 2. 5 Electromagnetic Environment ..... 11
- 2. 2. 6 Camcorder Use ..... 11

**2. 3 KY-27 FEATURES** ..... 12
- 2. 3. 1 High Performance Features ..... 12
- 2. 3. 2 Advanced Applications Features ..... 13
- 2. 3. 3 Standard Features ..... 15
- 2. 3. 4 Additionally ..... 15

**2. 4 CAMERA DIAGRAMS: CONTROLS, CONNECTORS, INDICATORS** .. 16
- 2. 4. 1 Switches for Camera Control and Setup .... 17
- 2. 4. 2 Switches and Control of Camera Input and Output, Accessory Mounts ..... 22
- 2. 4. 3 (Optional) KA-27 Camera Adapter ..... 24
- 2. 4. 4 Optional Viewfinder VF-P115 ..... 26
- 2. 4. 5 Viewfinder Warning Indications ..... 26
  - 2. 4. 5. 1 Viewfinder Warning Lights ..... 26
  - 2. 4. 5. 2 Viewfinder Warning Messages ..... 27
- 2. 4. 6 Status Indications (On Screen) ..... 28
- 2. 4. 7 Lens ..... 31

**CHAPTER 3 BASIC OPERATION** ..... 32

**3. 1 Power Supply** ..... 32
- 3. 1. 1 Typical Battery Power Usage ..... 32
- 3. 1. 2 Battery Care ..... 32
- 3. 1. 3 The Standard Battery Holder for NB-G1 and NP-1B Type Battries ..... 33
- 3. 1. 4 Other Battery Holders ..... 33
- 3. 1. 5 AC Power Adapter AA-P250 and Cable ..... 34
- 3. 1. 6 Power From a Portable VTR ..... 34
- 3. 1. 7 Power From Optional Remote Control Unit ..... 34

**3. 2 Every Day Before Shooting (Basic Operation)** ..... 35
- 3. 2. 1 Initial Set-up Preparations ..... 35
- 3. 2. 2 Viewfinder Adjustment ..... 37
- 3. 2. 3 Back focus Adjustment ..... 37
- 3. 2. 4 Lens Operation ..... 37
- 3. 2. 5 Normal Auto White/Black Balance ..... 38
- 3. 2. 6 Zebra Pattern (Video levels) ..... 39
- 3. 2. 7 Check Audio ..... 39
- 3. 2. 8 Full Auto Shooting Operation ..... 39

# 1.2 CONTENTS


3. 2. 9 Mount Camera On Tripod ..... 40
3. 2. 10 Starting the VTR ..... 40

**3. 3 TROUBLE SHOOTING** ..... 41

**CHAPTER 4 ADVANCED OPERATION** ..... 43

**4. 1 SELECTING ADVANCED FUNCTIONS FOR DIFFERENT SHOOTING CONDITIONS** ..... 43

**4. 2 WHITE BALANCE ADJUSTMENT** ..... 44
4. 2. 1 Summary Discussion and color temperature ..... 44
4. 2. 2 White Balance Features ..... 44
4. 2. 3 Basic Operation ..... 46
4. 2. 4 Error Messages ..... 47

**4. 3 ELECTRONIC SHUTTER PRIORITY** ..... 48
4. 3. 1 Summary ..... 48
4. 3. 2 Basic Operation ..... 48
4. 3. 3 When To Use ..... 48

**4. 4 VARIABLE SCAN** ..... 49
4. 4. 1 Summary ..... 49
4. 4. 2 Basic Operation ..... 49
4. 4. 3 Range of Frequencies covered ..... 49
4. 4. 4 This chart is for some popular computers .. 50
4. 4. 5 Special Application High Shutter Speeds... 50

**4. 5 GAIN** ..... 51
4. 5. 1 Summary ..... 51
4. 5. 2 Operation ..... 51
4. 5. 3 ALC ..... 51
4. 5. 4 GAIN, Fstop and Shutter Speed Range ..... 52

**4. 6 LOLUX** ..... 52

**4. 7 IRIS** ..... 53
4. 7. 1 Multizone Design ..... 53
4. 7. 2 Exposure Detection modes ..... 53
4. 7. 3 Iris Over/Normal/Under ..... 54
4. 7. 4 IRIS Operation ..... 54

**4. 8 FULL AUTO SHOOTING** ..... 55

**4. 9 ACCUMULATED RECORD TIME** ..... 56

**4. 10 CAMERA SET-UP** ..... 57
4. 10. 1 Adjusting Camera Set-up ..... 57
4. 10. 2 Contour Correction ..... 58
4. 10. 3 Reference Black Level ..... 58
4. 10. 4 Iris Detect ..... 58
4. 10. 5 Gain (Sensitivity) Assignment ..... 58
4. 10. 6 Full Time Auto White ..... 59
4. 10. 7 Safety Zone Type ..... 59
4. 10. 8 Rec Time ..... 59
4. 10. 9 Lens Tigger ..... 59
4. 10. 10 System Reset ..... 59

**4. 11 ZEBRA PATTERN (VIDEO LEVELS)** ..... 60

**4. 12 LENS CLOSE-UP MACRO FUNCTION** ..... 60

**4. 13 COLOR BARS, ADJUSTING EXTERNAL MONITOR** ..... 61

**CHAPTER 5 OPERATION WITH OTHER EQUIPMENT** ..... 62

**5. 1 OPERATING PROCEDURE WHEN DOCKED WITH (PROFESSIONAL S-VHS) OR OTHER VTR** ..... 62
5. 1. 1 Basic Recording Operation ..... 62
5. 1. 2 Power Save Operation ..... 64
5. 1. 3 Safely Ending a Recording Session and Ejecting ..... 64
5. 1. 4 Monitoring EE Picture ..... 65
5. 1. 5 Monitor Sound Levels and Signal During Recording or Playback ..... 65

**5. 2 OPERATION WITH EXTERNAL VTR** ..... 66
5. 2. 1 Use of KA-27 Summary ..... 66
5. 2. 2 KA-27 Typical Switch Settings ..... 66
5. 2. 3 KA-27 Input and Output Connections ..... 67
5. 2. 4 VTR Cable Chart ..... 67

**5. 3 GENLOCK OPERATION** ..... 68

**5. 4 REMOTE CONTROL UNITS** ..... 68
5. 4. 1 KA-27 Settings and Connections ..... 68
5. 4. 2 RM-P200 ..... 68
5. 4. 3 RM-P300 and RM-LP821 ..... 69

# CONTENTS 1.2


5. 5 RM-LP80 COMPUTER CCU CONTROL ..... 70
5. 5. 1 RM-LP80 Connection ..... 70
5. 5. 2 Remote Operation ..... 70
5. 5. 3 Controls ..... 70
5. 5. 4 Computer CCU Control ..... 70

CHAPTER 6 INSTALLATION AND PREPARATION ..... 71

6. 1 KA-27 CAMERA ADAPTOR ..... 71

6. 2 DOCKABLE VTRS ..... 72
6. 2. 1 BR-S411 VTR Attachment ..... 72
6. 2. 2 BR-S420C VTR Attachment ..... 72
6. 2. 3 MII VTR Attachment ..... 73
6. 2. 4 Betacam® SP VTR Attachment KA-B20 ..... 73
6. 2. 5 Betacam® Professional/Hi8 VTR Attachment KA-P20 ..... 73

6. 3 LENS ATTACHMENT ..... 74

6. 4 VIEWFINDER ATTACHING/DETACHING ..... 74

6. 5 MICROPHONE ATTACHMENT ..... 75

6. 6 OPTIONAL STUDIO VIEWFINDER VF-P400 ..... 76

6. 7 STUDIO KIT ATTACHMENT ..... 76

CHAPTER 7 SPECIFICATIONS AND ACCESSORIES ..... 77

7. 1 NTSC SPECIFICATIONS ..... 77

7. 2 DIMENSIONS ..... 78

7. 3 ACCESSORIES ..... 78

7. 4 ACCESSORIES SYSTEM CHART ..... 79


®: Betacam is a trade mark of SONY Corp.

# INDEX 1.3


## A

A (Automatic Iris ON) ..... 30
ABBREVIATIONS (in viewfinder) ..... 29
AC power Adapters ..... 34
ACCESSORIES ..... 78, 79
ACCUM (Accumulated Record Time) ..... 18, 57
ADJUSTING CAMERA SET-UP ..... 18, 57
ADJUSTING EXTERNAL MONITOR ..... 61
ADVANCED OPERATION ..... 43–61
ALC (Auto Variable Gain/Shutter) ..... 51, 52, 57, 58
APERTURE PRIORITY ..... 51, 52, 58
APB (Auto Peak Average Balance) ..... 53, 57
AUDIO LEVEL INDICATOR ..... 28
AUDIO LEVEL –20dB/–60dB (output) ..... 24, 36
AUTO (camera setup display) ..... 57
AUTO-1, AUTO-2 (W. BAL) ..... 18, 47, 57
Auto Shooting ..... 17, 55
Auto white 2 memory ..... 18, 47, 57
AUTO WHT SETUP/BLK. (Auto White/Black balance) ..... 20, 22, 29, 38, 44, 46
AVG (Average Iris Detect) ..... 53, 57
AW2 (camera set-up) ..... 57

## B

Back focus Adjustment ..... 37
Balance
  Automatic Peak/Average ..... 53, 57
  Auto White/Black ..... 20, 22, 38, 44, 46
BARS ..... 18, 61
BASIC OPERATION
  Camera Operation ..... 35
  Power ..... 32
  Recording Operation ..... 62
  White, Black Balance ..... 38, 44, 46
BATTERY
  Care ..... 32
  Holders ..... 33
  Life ..... 32
Betacam® Pro ..... 73
Betacam® SP VTR attachment ..... 73
BLACK BALANCE ADJUSTMENT ..... 46, 47
Black level (Master Black) ..... 18, 57, 58
BR-S411 VTR optional attach ..... 72
BR-S420C VTR optional attach ..... 72

## C

Cables
  Camera Control Unit ..... 69
  Portable VTR ..... 67
CAM
  MIC CAM/AD ..... 24, 36, 66, 75
  CAM/BARS MODE ..... 18, 61
CAM/VTR OPERATE: ON/ST-BY, ON/SAVE OFF/SAVE ..... 17, 35, 62
Camcorder Use ..... 11, 62
CAMERA ADAPTOR ATTACHMENT ..... 71
CAMERA CONTROLS ..... 16–30
CAMERA DIAGRAMS ..... 16, 19, 21, 23, 25, 31
Camera Features/Functions ..... 12
CAMERA INPUT
  Audio ..... 22, 24
  Genlock ..... 22, 68
  Video (RET) ..... 22, 69

# 1.3 INDEX


CAMERA SET UP ....57
Reset to Default Settings ....59
CCDS, Protection, Performance....10
chart for VTR settings....36
Check audio....39
Choice of:
Accum. or Remain Time ....56, 59
Contour level....57, 58
Full Auto white or AW mem 2 ....57
Gain switch levels....57
Iris detect mode ....53, 57
Iris Manual, Automatic....30, 55
Iris Over/Under ....17, 54
Lens Trigger ....59
Master Black level....58
Safety zone types ....18, 19, 59
Shutter Speed ....17, 48
Variable Scan Speed ....17, 49
CINEMA (safety zone) ....18, 19, 59
Close-up/Macro use....60
Color Balance....38, 41, 44
COLOR BARS ....18, 61
color temperature....44, 45
component output....65, 66, 68, 69
COMPUTER CCU CONTROL....70
Computer Display Frequencies ....49, 50
Connections ....20–26, 34, 67–70
CONTENTS....3
CONTOUR/detail correction ....18, 57–58
CONTROLS....16–30
CCU functions
COMPUTER....70
RM-LP80 ....70
RM-P200/RM-P-300....68, 69

## D

DC IN (master power)....17, 24, 34, 35, 62, 65, 66
DEFAULT SETTINGS ....59
DETACHING ....71–76
DIFFERENT SHOOTING CONDITIONS....43
DIMENSIONS ....78
DISP. SELECT....18, 28, 59
DOCKABLE VTRS
Use with ....62
Installation....72, 73
DOWN (Button)....18, 19, 20

## E

EAR-PHONE ....24
EFFECT (status mode 2) ....28, 29, 45
Ejecting Safely ....64
Electromagnetic Environment....11
ELECTRONIC SHUTTER PRIORITY... 17, 48
Ending Recording Session....64
Engaging the VTR....62
Error messages....27
EVERY DAY SHOOTING....35
Expected battery life....32
Exposure Detection Modes....53
External Filters ....45

## F

F (Full Time Auto White engaged)
Status Mode 0, Mode 1 ....28, 29
FAS (Full Auto Shooting engaged)
Status Mode 0, Mode 1 ....28, 29
FAW (Full Time Auto White)
Status Mode 2, Camera Setup....28, 57
FEATURES....12
FILTER Turret ....16, 45
FULL AUTO
(FULL AUTO SHOOTING) ....17, 55
FULL TIME AUTO WHITE....18, 44, 57
FUNCTION RESET to Default....59

## G

G (Gain engaged)
Status Mode 0, Mode 1 ....28, 29
GAIN ....18, 51, 58
GENERAL FEATURES AND FUNCTIONS ..8
GENLOCK INPUT/OPERATION ....68
GUIDES....3

## H

H (Horizontal Sync Phase)....68
Handle options ....71–74
Handling Precautions ....9
headsets ....24, 69
Hi8 VTR attachment....73
HIGH PERFORMANCE ....12
INDICATORS ....26–29

## I

I (Iris Over or Under engaged)
Status mode 0, mode 1 ....28, 29
INCOM LEVEL (Intercom)....24
Initial Set-up preparations ....35
INSTALLATION....71–76
INTERCOM ....24, 68
Internal dip switch ....36, 66
Internal Filters ....20, 45
INTRODUCTION....8
IRIS
IRIS DETECT Mode
Peak, Average, APB, Normal ...53, 54, 57
Manual, Automatic....30, 54
Multizone....53
LEVEL: Over/Normal/Under ....17, 54

## K

KA-27 Input and Output ....24, 67
KA-27 Settings/Connections ....24, 66
KA-B20 Broadcast Betacam adapter ....73
KA-M20 MII VTR Adapter....73
KA-P20 Betacam Pro/Hi8 adapter....73

## L

L (LOLUX engaged)
Status mode, 0, mode 1 ....28, 29
LENS
ATTACHMENT ....74
Functions....30
Operation ....37
Macro Close-up Operation....60
LENS TRIG (TRIGGER) ....30, 59
Filters ....9, 30, 45
Limitations
on distance to CCU....68, 69
on lolux, auto iris, etc. ....41, 42, 69, 70
LOCK (Camera Setup) ....29, 57, 58
LO-LUX....12, 17, 52

## M

M (Manual Iris mode)....30, 51, 52
MACRO (Close-up) focus ....60
MANUAL (status mode 2)....18, 28
MANUAL
CCU White Balance ....69–70
Manual Focus....37
M. BLACK (Camera Setup)
(Master Black) ....57, 58
MIC
CAM/AD....24, 36
INPUT ....22, 24, 67, 75
STEREO/MONO ....22, 36, 75
MICROPHONE ATTACHMENT....75
MII ....24, 27, 68, 73
MII VTR attachment....73
Monitoring E to E VTR....22, 65
Monitoring Sound levels ....24, 28, 39, 65
Mount Camera On Tripod....40
MOUNTS ....22

# INDEX 1.3


Multizone Iris Design....13, 53

## N

ND (status mode 2, Filter turret)
Neutral Density....20, 28, 45, 52
NB-G1U Battery use....32–33
NP-1B Type Battery....32–33
NONLOCK....29, 57, 59
NORMAL (status mode 2)....28, 29

## O

OPERATE (switch)....17, 35, 62–65
OPERATING PROCEDURE....35, 62–70
Basic Operation....35
WITH DOCKED VTR....62
WITH EXTERNAL VTR....66
Optional Accessories....78, 79
Other Batteries....32, 33
OTHER EQUIPMENT
docked VTRs....62
portable VTRs....66
Genlock....68
RGB equipment....68, 69
Camera Control Units....68, 69
OUTPUT....22–24, 36, 66–69
OVER....17, 54

## P

PEAK....53, 57
PHASE....22, 68
POWER
AC POWER SUPPLY....34
DC IN/OFF/VTR
from a portable VTR....34
from remote control unit....34
Power Save operation....64
PRECAUTIONS....2, 9
Preconditions, Full Auto Shooting....55
PREPARATION (installation)....71–76
PRESET (White Balance)....20, 29, 42, 44
Priority over other functions....42
PROFESSIONAL S-VHS VTR....27, 62

## Q

QUICK USE GUIDE....Cover

## R

Range of Frequencies covered....49, 50
REC TIME....18, 28, 56, 57
REFERENCE BLACK LEVEL....18, 29, 57, 59
REMAIN Time....18, 28, 57, 59
REMOTE CONTROL UNITS....68–70
RESET TO DEFAULT
Camera Setup/Functions....59
RET
(Return Video)....22, 65
RGB OUTPUT....68, 69
RM (remote control input)....22, 24, 68–70
RM-LP80....70
RM-LP821....69
RM-P200....68
RM-P300....69

## S

S (Shutter/Variable Scan engaged)
Status mode 1, mode 2....28, 29
SC (Subcarrier Phase)....22, 23, 68
Safety Precautions....2, 9
Safety zone: Standard/Cinema....18, 59
SAVE (status mode 1)....28, 29, 64
SELECT switches KA-27
VTR MII/BETA....24, 25, 36, 66
SIG COMP/ Y/C /RGB....24, 25, 36, 66
MODE VTR/RM....24, 25, 36, 66
SELECTING ADVANCED FUNCTIONS....43
Selecting Status Display mode....18, 28
SENSITIVITY (GAIN)....18, 51, 52, 57
SERVO (ZOOM)....30, 37
SET (Button)....18, 29, 35, 57
SETUP (Pedestal)....18, 57
SETUP/BLK....22, 38, 47
SHOOTING, basic operation....35
SHUTTER ON/OFF/V. SCAN....17, 48, 49
Software....70
Special High Shutter Speeds....50
SPECIFICATIONS....77
Standalone CCU (RM-LP80)....70
Starting the VTR....62
Status Mode 0, 1....18, 28
STATUS INDICATIONS....18, 28
STBY (status mode 2/operate switch)
(Standby mode)....17, 18, 28, 62–65
STD (Standard safety zone)....18, 19, 59
STEREO/MONO....22, 23, 36, 75
STUDIO KIT ATTACHMENT....76
STUDIO VIEWFINDER VF-P400....76
System configurations (basic)....79

## T

TAPE NEAR END....27
TRIPOD BASE....40
TROUBLESHOOTING....41

## U

UNDER....17, 54
UNLOCK (NONLOCK)....29, 57, 59
UP (Button)....20
Use of KA27....66

## V

VARIABLE SCAN....17, 49
VC-P891 IBM RS-232C cable....70
VC-P892 Macintosh Cable....70
VF (camera viewfinder socket)....20
Video level/Zebra Indication....20, 59
VIDEO OUTPUT....18, 22, 24
VIEWFINDER....22, 26–29
Adjustment....37
ATTACHING....74
warning lights, messages....26, 27
Studio....76
VOLTAGE....9, 32, 34
12VDC=INPUT....24, 32, 33, 34
VTR
VTR (trigger)....16, 17, 30, 31, 70, 74
cable list....67
Composite, Y/C, component....66
Operation with docked....62
Operation with portable....66

## W

WARNING INDICATIONS....26
Warning messages....27
Warning priority....42
W. BAL (memories/modes)....18, 44
When To Use functions....43
WHITE BALANCE....20, 38, 44
Features....44
Memories....18, 44, 57
Memory/FAW selection....57
WHT (switch)....20, 38, 45

## Y

Y/C OUTPUT....24

## Z

Zebra Pattern....20, 60
ZONE (switch)....18
ZONE MODE (Cinema/Standard)
....18, 28, 29, 57, 59
Zone sensitivity....53
Zoom servo....30, 37

# 2 GENERAL FEATURES AND FUNCTIONS

## 2.1 INTRODUCTION

Thank you for purchasing the JVC KY-27. You can look forward to long and reliable service from your camera and JVC.

If you have any questions feel free to contact your dealer. If you need to contact JVC directly for service or advice, your dealer will be happy to provide you with the necessary contacts.

This camera is a unique and rugged product that fits well with JVC or any other Manufacturers Broadcast and Professional Systems.

It is designed to be simple, flexible and straight forward to use based on considerable feedback from end users with demanding and exacting applications.

- Please note the layout of this manual to help you with your information needs.

*1* **The Guide Sections** at the beginning will help you locate information quickly and with great detail.

*2* **The General Features Section** will give an overview of the KY-27's unique functions that you will want to look into further.

The **Precautions** subsection will help you take care of your camera, and understand some of the limitations as well.

The **Camera Diagram** section is a comprehensive map to each and every control, connector, indicator and function.

*3* **The Basic Operation Section** assumes that you or your Technician has Assembled the camera according to section 6 on Installation and Preparation.

This section will allow you to quickly learn to get a decent image successfully to tape, and takes you step by step through a normal "every-day" set up.

*4* **Advanced Operations** takes you right inside the features of your camera. You will understand exactly what each feature is intended to accomplish, and perhaps think of some new possibilities yourself.

*5* **Operation With Other Equipment** is a step by step approach to use of the camera with Docked VTRs, External VTRs, and RGB devices. Genlock operation and Studio operation with JVC Camera Control Units is covered as well.

*6* **Installation and Preparation** shows the great versatility of this camera, From stand alone configuration to dockability with virtually every Broadcast and Professional dockable VTR.

Get the most out of your system by rigorously adhering to the correct procedures.

*7* **Additional Information** contains pertinent Specifications, Dimensions, and Accessories.

# PRECAUTIONS 2.2

## 2.2.1 Safety

Please read the safety section on the inside front cover of this manual.

If there is any danger of being struck by lightning during outdoor shooting, evacuate to a safe place immediately.

Do not modify the unit or operate it without cover panels to prevent danger.

Do not damage or fray the power cord; otherwise this will cause leakage or electrical shock.

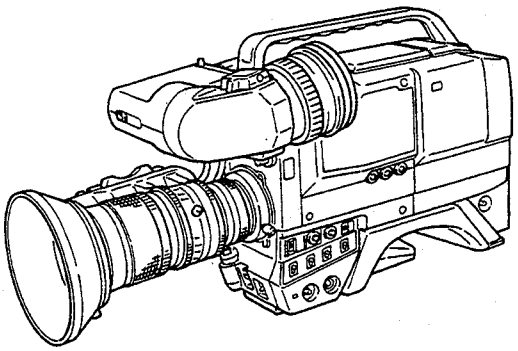

## 2.2.2 Installation

Before Turning on the power supply, please double check that you have followed installation procedures precisely.

Take Steps to avoid assembly in dusty, humid or corrosive environments.

When there is any abnormality (i.e. noise, smell, smoke or malfunction), immediately turn the power off and contact your nearest JVC Authorized service agent.

Do Not attempt to repair or open the unit or significant damage can occur immediately.

Severe hot and cold temperatures can damage your camera, especially the CCDs, even if only exposed during storage.

## 2.2.3 Handling Precautions

**Supply Voltage**

Make sure that the power is between 10.5 V and 15 V DC. If the power voltage is too low, abnormal color and increased noise may occur.

Do not exceed 18V DC in any case, or the unit could be damaged.

It is advised to use the optional NB-G1 Battery (With the provided battery holder) or the optional AA-P250 or AA-G10 power adapters.

**Protect the Lens and Camera Gate/Optical Block**

The camera lens should be protected externally with a Clear or UV filter against accidental scratching, touching or dirt. The external lens cap should be used whenever possible.

When the lens is changed take special care to avoid contaminating the inner lens surface and camera gate/optical block area with moisture or dust.

If the lens is to be left off at all, use the camera gate dust cap and the internal lens cap.

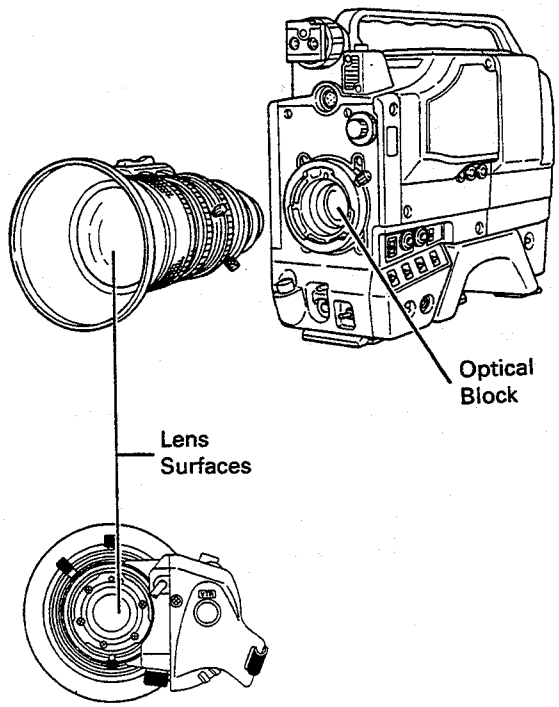


**Temperature range**

Do not operate this camera outside a –5 to 45 degrees Centigrade (23 to 113 degrees Fahrenheit) range.

Do not create Overheating from lack of ventilation.

# 2.2

**The Sun**

Prevent sunlight from directly entering the Lens and Viewfinder to avoid damage.

**Shock**

Although rugged, this camera should not be dropped and should be protected from shock; Especially the lens.

**Do not hold by viewfinder.**

This part is not intended to bear weight.

**Shipping precautions; Transit versus Shipping.**

During normal use the camera should be stored inside the JVC transit case.

However, these cases are NOT intended for shipping by air or post, but for protection while traveling.

If you wish to send the camera by air or post please place it inside the original carton, or pack the transit case securely.

**Shipping positions**

The Lens should be stored with both internal and external caps if removed from the camera, and the camera gate/optical block protected by the dust cover.

The View finder should be retracted into the shipping position and locked.

**Cleaning**

When the camera is dusty; clean with a dry, soft cloth. If extremely dirty use a neutral detergent and finish by wiping with a damp cloth.

If soiled with water, oil, solvent, etc. wipe the material off first with a soft cloth, and then clean with gauze soaked in denatured alcohol.

Do not damage the body of the camera by using volatile liquids such as benzine or thinner.

When the Lens is dusty, gently wipe it with a soft brush, or gently wipe it with a soft cloth slightly dampened by lens cleaner. Be careful not to scratch the lens.

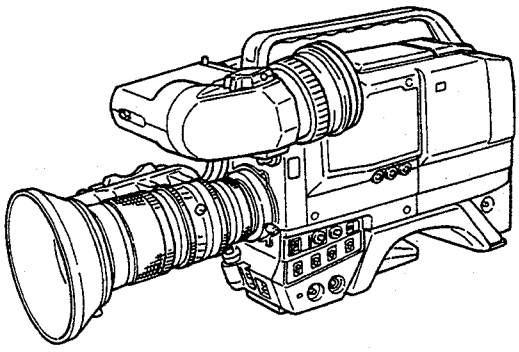

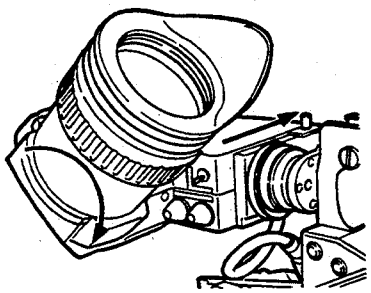

## 2.2.4 Protection and Performance of the CCDs.

**Damage to CCD**

Shooting direct sunlight or other strong light sources for a long time can damage the CCDs, even though they are less susceptible to burn than tubes.

Make it a rule to close the lens iris and protect the lens with a lens cap after use, as the internal filter does not completely block out light.

If the camera is not going to be used for an extended period of time, be sure to cover the lens with a lens cap.

**High temperatures**

High temperatures can cause CCD sensor pixels to malfunction with the effect of White dots in the image. This condition could damage the CCD, and certainly raises the "fixed pattern" noise level that all CCDs have thus giving a noisy picture.

**CCD Smear and Blooming**

Due to the physical structure of the CCDs in this camera it is possible to induce vertical streaking or smear when shooting an extremely bright light source.

Another effect is the expansion of light around a bright light or object called Blooming.

Just as you protect your image against lens flare (internal lens reflections); please be careful when shooting a bright light source.

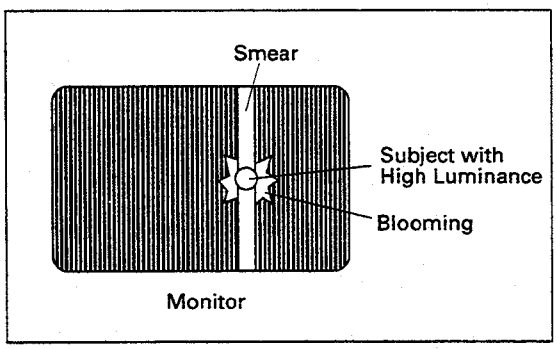


**Gain, Noise and White Balance**

Higher levels of output gain result in a decrease in the signal to noise ratio, possibly resulting in a noisy picture.

White balance can also be distorted when gain is increased or decreased without performing it again. Use this function in the mode that you expect to shoot.

**Moire or Aliasing**

Shooting stripes or fine patterns may cause a jagged effect or a banding in fine mesh patterns.

Try repositioning the lens zoom to change the frequency of the detail information and eliminate the distortions.

## 2.2.5 Electromagnetic Environment

Powerful Magnets or Strong Electromagnetic fields can effect or damage the camera.

These are present in large machinery or near a radio or TV transmitter. The picture can become noisy and colors may be distorted.

The camera also produces Electromagnetic fields, and this can affect a wireless microphone or wireless microphone tuner. Try a different frequency to eliminate this.

## 2.2.6 Camcorder Use

When using this camera docked to a VTR, please refer to that devices manual for precautions.

Typically it is important to protect the docked VTR from humidity and sudden humid environments, from rapid changes in warm to cold and cold to warm temperatures, and from shock or vibration.

Do not try to eject tapes from the Camera/VTR Off/Save or On/Save operating modes.

Do not leave the Camcorder in the Record/Pause mode to avoid using up the battery and damaging the tape.

Remove cassettes when not shooting as a camcorder.

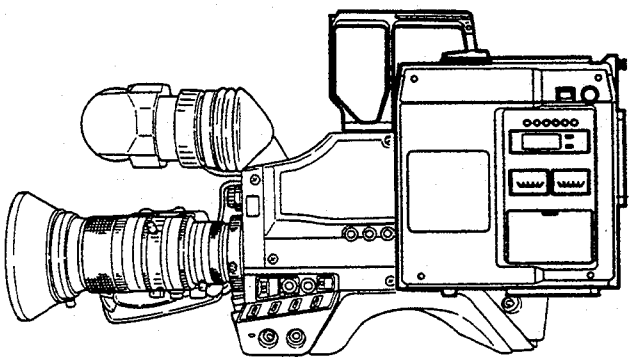

# 2.3 KY-27 FEATURES

The KY-27 three CCD camera is designed to give you the maximum field and studio utility for Broadcast or Professional applications.

The features are designed with the everyday challenges of shooting in mind.

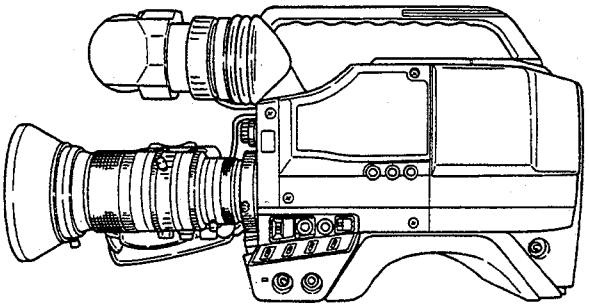

## High Performance Features:

### Advanced Broadcast Specifications, Simple and Rugged Design

JVC is the first to utilize newly developed Broadcast 2/3 inch CCDs with High 750 Line Resolution, High Sensitivity of F8 at 2000 Lux and a Superb Signal to Noise ratio of 62 dB (NTSC), 60 dB (PAL) at 0 dB Gain.

These pioneering CCDs use extremely low smear "Lens on Chip" Interline Transfer chip technology and take advantage of 2/3 inch lens optical characteristics, backed by broad bandwidth camera electronics.

Simple Operation is based on intuitive "HANDS ON" controls and good ergometrics.

Control over Iris, Shutter speed and Gain can be Fully Automatic, or Variable by Priority in the Photographic tradition of Aperture Priority, Shutter Priority and Film Speed(sensitivity).

Rugged Design from stems from JVC experience in the field in the tradition of the KY series.

Internal boards are completely adjustable without the use of extenders through side mounted potentiometers. Internal dip switch settings are minimized.

Operating Temperature ranges from –10 to 45 degress C, 14 to 104 degress F due to broadcast quality circuit components.

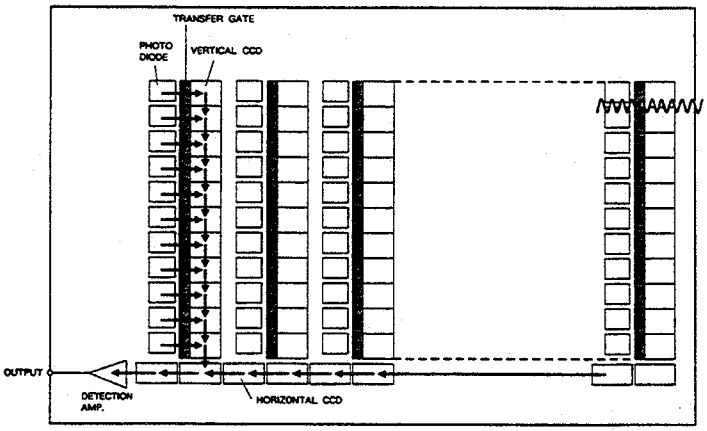


### Universal Dockability

The KY-27 is universally dockable to JVC and other Professional S-VHS and MII decks as well as Betacam® Professional, Hi8, and Broadcast Betacam® SP decks.

### LOLUX Gain

LOLUX captures scenes never before possible because of low lighting conditions.

In this mode the CCD chip is maximized for low light sensitivity comparable to a Gain Up position of +30 dB. This Super Sensitivity is ideal for special shooting conditions with almost no lighting.

Good color balance is maintained even down to 2 lux illumination.

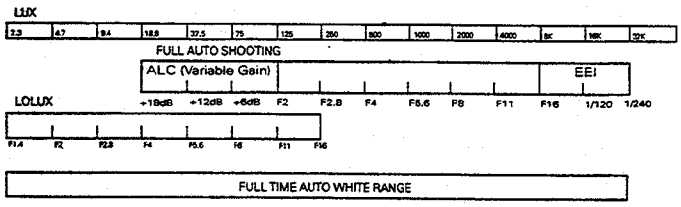


**FULL AUTO SHOOTING AND LOLUX RANGE**

### Full Auto Shooting

JVC programming expertise is the first to create this new mode of operation. The Camera person can count on new confidence in capturing the image quickly in any situation, taking advantage of the cameras broad image analysis powers.

This Full Automatic "Program" Shooting mode means

that the camera person can count on an excellent picture just by zooming, focusing and pushing the trigger.

Most conditions likely to be encountered are recognized by the camera and adjusted for by these KY-27 image analysis functions:

Through MULTIZONE WEIGHTING of the image area the priority of the sector of the image is applied to the camera's response to light values.

The AUTOMATIC IRIS then works in concert with Enhanced AUTOMATIC LEVEL CONTROL (ALC). Enhanced ALC uses Variable Gain and Variable Shutter Speed (EEI: Extended Electronic Iris) to extend the exposure operating range.

The type of Subject Lighting is compensated for using the AUTOMATIC AVERAGE/PEAK BALANCE function.

Finally the FULL TIME AUTO WHITE function analyses orange/yellow and blue colors in the video image and adjusts for the proper center white balance, with correction to ensure proper skin tones.

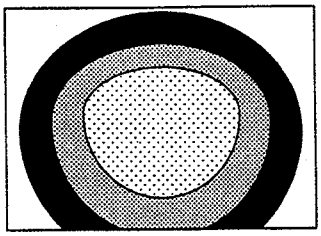

MULTIZONE WEIGHTING

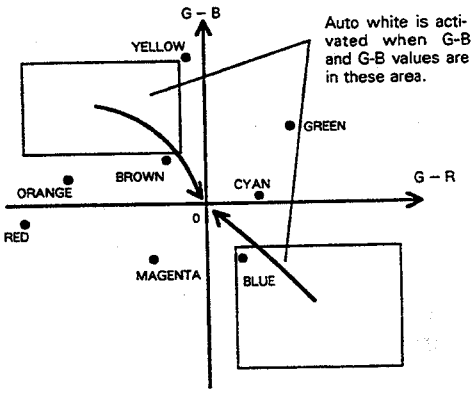


FULL TIME AUTO WHITE

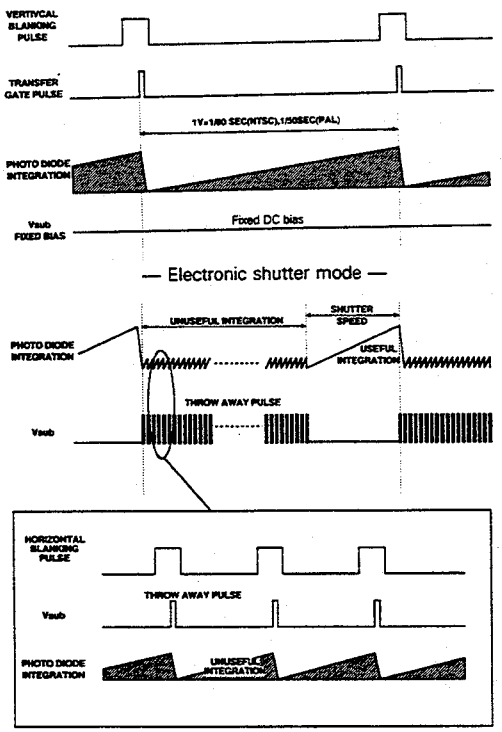


VARIABLE SCAN

# Advanced Applications Features:

Beyond this high level of performance the cameraperson can manually determine how to shoot the subject matter taking into consideration the needs of a advanced applications, and taking advantage of the KY-27's image analysis features.

### Variable Scan

Flicker Bars in the display image of Computer Monitors are caused by the differing scan rates of the Computer Monitors.

The Variable Scan function can minimize this effect by tuning the camera shutter speed to the precise scan rate of the Display screen.

The small increments range from 1/60.2 sec to 1/1966.7 sec (U version), 1/50.0 sec to 1/1953.1 sec (E version).

# 2.3

## Aperture Priority

The new Enhanced ALC (Automatic Level Control) mode allows the Video Signal levels to be governed by either the Automatic or Manual Aperture Setting.

The camera then uses both Gain up to +18dB and Shutter Speeds up to 1/250th of a second to adjust for the needed exposure.

The camera operator can set a fixed depth of field under a variety of shooting conditions by setting the Iris manually. The changes are smooth and continuously variable, starting from wherever the Iris is set.

In Manual Iris, 0dB Gain the cameras range is extended at F1.4 from 75 lux down to 9.4 lux in low light and at F16 from 8000 lux up to 32000 lux in bright light.

This exposure range is the equivalent of 3 Fstops below and 2 Fstops above the actual lens Fstop.

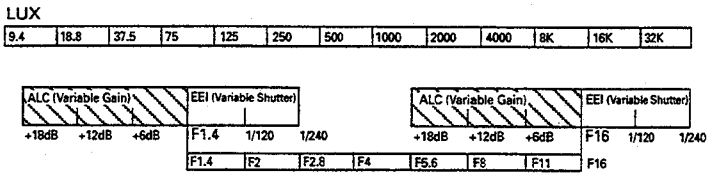


**FIXED F STOP RANGES**

## Camera Setup

CONTOUR (Detail enhancement) and MASTER BLACK (Pedestal) are easily adjustable through the Camera Set-Up Menu. Even in extreme shooting conditions the camera person does not need to open up the camera to adjust these fundamental features.

CONTOUR

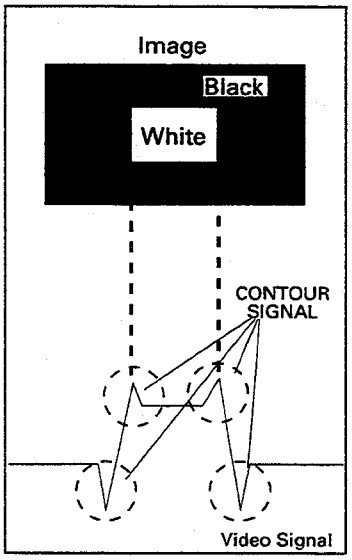


## Iris Over/Under

The reference level for the exposure programming can be adjusted for over and under exposing by approximately a half F-stop.

The Iris Over/Under control is in easy reach on the outside of the camera.

## Iris Detection mode

The type of subject lighting can be compensated for.

Subjects with brightly lit highlights that should not be over exposed are shot with PEAK mode.

Subjects close to the background lighting with bright highlights that should not be preserved are shot with AVERAGE mode.

The AUTOMATIC AVERAGE/PEAK BALANCE function (APB) allows the KY-27 to analyze if the scene is a Peak or Average situation and continuously vary its response according to changing conditions.

MASTER BLACK

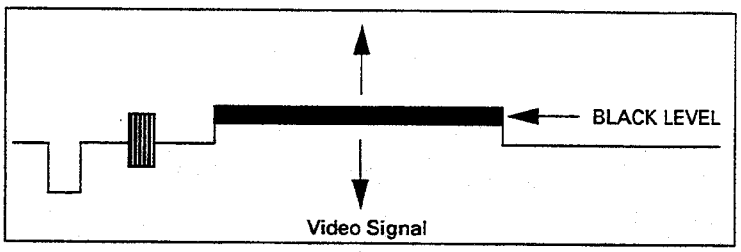


## Computer and Remote CCU Control

Studio and other advanced applications can choose from Standalone, Inexpensive or Long range High Precision Camera Control units.

Computer Camera Control is available for basic functions with the optional cable for IBM computers. A optional Cable and Software is available for Macintosh computers.

# Standard Features:

### Auto Knee

All cameras limit the highest bright signals to keep them with in signal specifications. As the signal approaches this point the constant ratio of brightness to signal is changed.

As the dynamic range of scene brightness increases the KY-27 compensates by lowering the point that the ratio change begins to so that brighter values are reproduced within the acceptable range of the video signal.

The Auto Knee circuity extends a scenes light to dark dynamic range reproduction up to five times with out over exposure.

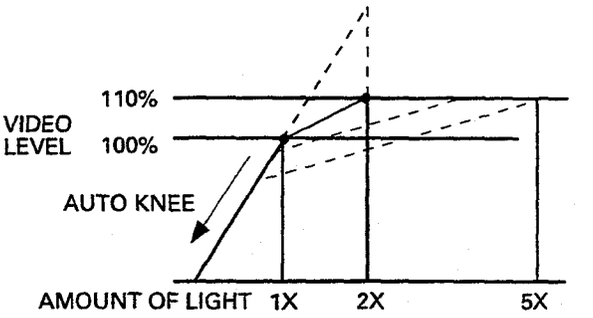


### Low Power Consumption

12.1 Watts with viewfinder and lens and 12.6 Watts with the KA-27 camera adapter means valuable battery time can be devoted to VTR use.

### Comprehensive Viewfinder Status Overlay.

The Comprehensive Viewfinder Status system allows the cameraperson to keep track of Audio levels, Accumulated or Remaining Recording Time, and VTR operation and Battery Voltage and Camera Set-Up.

The video signal and framing are indicated by Zebra video level indication and Safety Zones with center marker.

The Set-Up of the camera can be verified completely through the Viewfinder while shooting.

The large 1.5" viewfinder itself has very sharp 500 lines resolution.

STATUS MODE 1

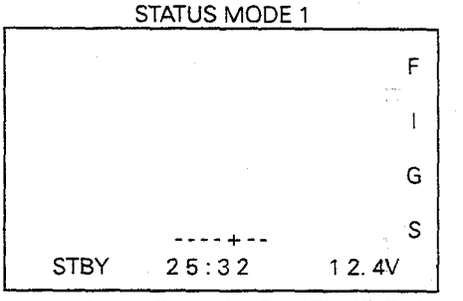


VTR STATUS REC TIMER BATT VOLTAGE

STATUS MODE 2

| | |
|---|---|
| WHITE BAL | MANUAL |
| FILTER | 5.6 K + ND |
| SHUTTER | NORMAL |
| GAIN | 0 dB |
| IRIS LEVEL | NORMAL |
| IRIS DETECT | NORMAL |
| AUTO SHOOT | ON |
| TAPE | < 10 |

# Additionally:

- 750 lines horizontal resolution.
- High F8 at 2000 lux sensitivity at 0 gain.
- High Signal to Noise ratio of 62 dB (U version), 60 dB (E version) at 0 gain.
- Vibration and impact resistant.
- Compact and light weight.
- No lag, burn resistant, no deflection distortion
- No missregistration from terrestrial magnetism.
- Component, Composite, Y/C and RGB outputs
- Shutter Speeds: 1/60 - 1/2000 (U version), 1/50 - 1/2000 (E version)
- 2H contour (detail) correction
- 8 pin or 12 pin 2/3 inch lens trigger is user adjustable.
- 4 settings for white balance: Auto 1 and 2, 3200K preset, Full Time Auto White

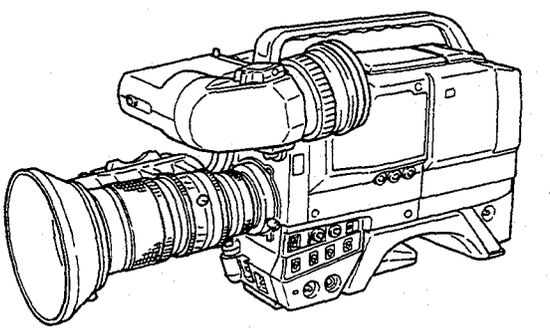

# 2.4 CAMERA DIAGRAMS: CONTROLS, CONNECTORS, INDICATORS

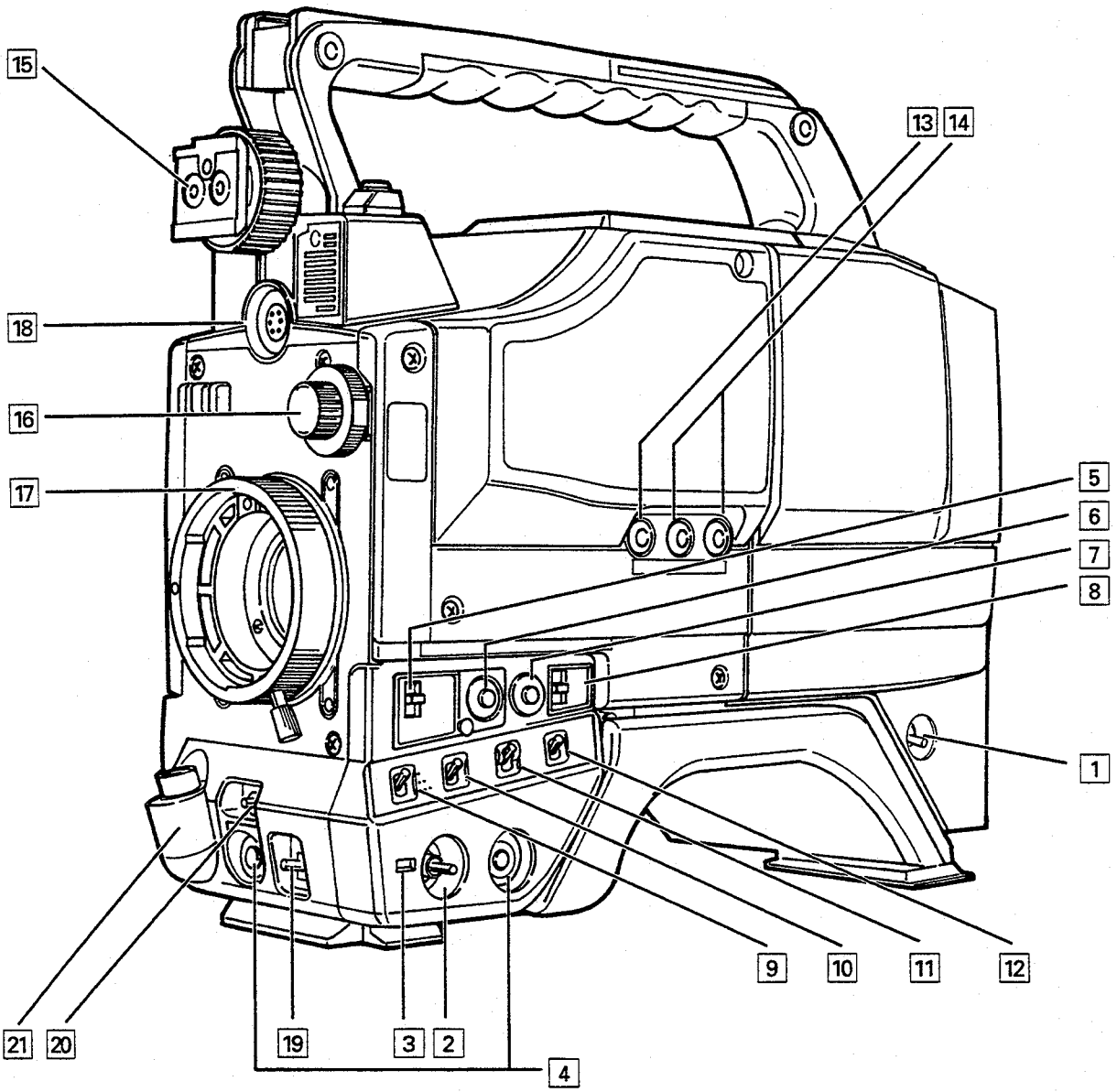


1

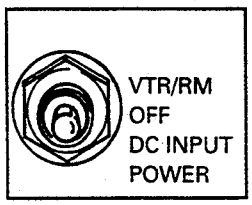


2 3

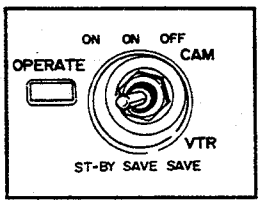


5 6 7 8

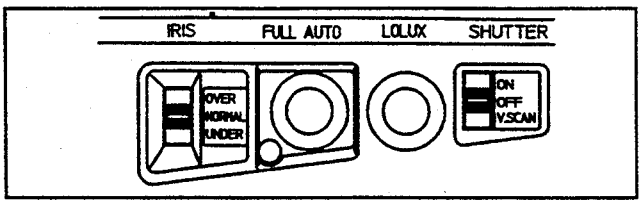

## 2.4.1 SWITCHES FOR CAMERA CONTROL AND SETUP

### 1 [POWER] POWER MASTER SWITCH (OPTIONAL KA-27)

This switch chooses the type of power source and turns on the camera.

If a VTR is docked there will be a similar Master Power Switch.

VTR/RM : Power is supplied through the Multipin Connector from an external VTR or Remote Control Unit.

OFF : Master Power Off for Camera/KA-27.

DC : Power is supplied from the onboard Battery pack or the 4 pin DC input. The 4 pin input has priority over the on-board battery.

WARNING : Do NOT unplug or plug the power while shooting, even if a battery is installed.

### 2 [OPERATE] CAMERA/VTR OPERATE SWITCH

ON/ST-BY : (On/Standby) For instant recording. VTR head is spinning in Record/Pause Mode.

ON/SAVE : To conserve power use by VTR. VTR head is stationary. In JVC SVHS decks circuit power is also off. (Hi8 decks have no save function)

OFF/SAVE : To conserve power use by CAMERA and VTR. Viewfinder is off and Camera is off.

### 3 CAMERA/VTR OPERATE LIGHT

Bright : In On/Standby and On/Save position
Dim : In Off/Save position
Off : KA-27 Power Master switch is Off or Power to unit is exhausted or not connected.

### 4 [VTR] VTR TRIGGERS (Recording Start/Stop)

These momentary buttons initiate or end recording if the VTR is in the Record/pause mode and the Camera/VTR Operate Switch is in the ON/ST-BY position.

There is a similar switch on the lens Servo, the optional RM-LP80 control unit and the Lens Studio Control Kit.

### 5 [IRIS] IRIS OVER/NORMAL/UNDER

Switch #5 can be used to adjust the exposure system to over or under expose by about a half F stop.

Push up for continued over exposure.
Push down for continued under exposure.
Middle for normal exposure

Many conditions can cause the detection mode to expose high or low, such as back lit or spot lit situations.

### 6 [FULL AUTO] FULL AUTO SHOOTING and INDICATOR LIGHT

This momentary switch turns this function on and off, with a Orange indicator light.

Full Auto Shooting combines the Auto Iris, Variable Gain setting and Variable Shutter Speed to control the exposure automatically.

The Iris is placed in Automatic even if the Auto Iris switch on the lens is in Manual.

The Gain will vary continuously to the maximum of +18 dB when the Iris reaches F2.0.

The Shutter speed will vary continuously to the minimum of 1/250th of a second when the Iris reaches F16. (EEI mode).

In addition the FULL TIME AUTO WHITE function samples colors in the image and determines the appropriate white balance, with proper skin colors as a control.

### 7 [LOLUX] LOLUX Gain

LOLUX gain gives extremely low light level sensitivity for special applications. The spec is the equivalent of F1.4 at 2 lux, or +30dB gain up.

LOLUX operation takes priority over normal gain operation.

Operation of LOLUX overrides the Variable Gain and Variable Shutter functions in Full Auto Shooting. Gain and Shutter are defaulted to previous switch settings including Variable Scan.

### 8 [SHUTTER] SHUTTER ON OFF/VARIABLE SCAN

SHUTTER ON :

This mode allows setting of different Shutter speeds.

To change shutter speed push the UP or DOWN SET Buttons (# 14) after placing this switch in the up and ON position.

The range of shutter speeds cycles between:

→ 1/100 (U version), 1/250, 1/500, 1/1000, 1/2000
1/120 (E version)

OFF :

This mode corresponds to the standard 1/60 NTSC, 1/50 PAL.

VARIABLE-SCAN :

This mode helps adjust the shutter speed to match the scan rate of a display or computer monitor.

Place the switch down in the V.SCAN position and then use the UP or DOWN SET Buttons to adjust the speed.

The result will be to eliminate the darkor light horizontal flicker bar. When the bar is the thinnest is the best setting.

If the bar is light the shutter speed is too low.

If the bar is dark the shutter speed is too high.

TO CHANGE THE SHUTTER SPEED OR VARIABLE SCAN AGAIN:

Press the UP or DOWN buttons again to activate the display, and a second time to change the speed.

# 2.4

## 9 [GAIN] GAIN SELECT SWITCH

The gain function boosts the signal from the CCD sensors.

The pyramid of dots stands for the different sensitivity levels. Two dots and Three dots can be changed in the Camera Set-Up menu.

One dot : Always equals the OdB gain up position.

Two dots : When Set Up for either enhanced ALC or +9dB.

Three dots : Is Set Up for +18dB.

Two dots : When Set Up for +6dB

Three dots : Can be Set Up for either Enhanced ALC, +9dB, and +12dB.

(ALC mode is the Enhanced AUTOMATIC LEVEL CONTROL mode in which Variable Gain and EEI (Variable Shutter speed) are used to achieve good video levels based on the Automatic or Manual Iris setting.)

## 10 DISPLAY SELECT /OFF/ SAFETY ZONE

● STATUS DISPLAY SELECT

Three information display modes are cycled between by pushing this switch repeatedly in the up DISP.SELECT position.

See section 2.4.5.2 for more details.

Mode 0 : Engaged Special Functions and video only are displayed on the right side of the screen.

F =Full Time Auto White

I =Iris level; Over or Under

G =Gain Up; 6dB, 9dB, 12dB, 18dB, **or**

L =LOLUX

S =High Speed Shutter or Variable Scan **or**

FAS =Full Auto Shooting **or**

ALC =Automatic Gain / Variable Shutter mode

Mode 1 : In addition, pressing the DISP. SELECT button up once also shows:

VTR status, Accumulated or Remaining Record Time, Battery and Input DC voltage, and Audio Levels.

Mode 2 : White balance mode
Filter Position
Shutter speed
Gain
Iris level
Iris Detect Mode
Auto shoot on/off
Accum. or Remain Rec time

● SAFETY ZONE SELECT

Three Overscan Safety Zone modes are cycled between by pushing this switch repeatedly down in the ZONE position.

Mode 0 : Video Only
Mode 1 : Safety Outline
Mode 2 : Center Markings and Safety Outline

The Ratio of the safety outline is changeable in Camera Set Up between 4:3 Standard and 16:9 Cinema ratios.

## 11 [MODE] CAMERA/COLOR BARS MODE

This switches between Camera and Color Bars video output.

## 12 [W. BAL] WHITE BALANCE AUTO 1/{AUTO2-FAW}/ PRESET

There are four white balance modes possible with this switch.

Auto 1 :White Balance Memory 1 is fixed in this position. If white balance is performed with the switch in this position it will be memorized.

Auto 2 : Can be selected in Camera Set Up as either White Balance Memory 2, or FULL TIME AUTO WHITE.

FULL TIME AUTO WHITE samples the color temperatures of the video image and adjusts for the correct middle white balance, with control for proper skin tones.

Preset : A non-erasable White Balance setting to 3200 degrees Kelvin. This corresponds to normal indoor tungsten incandescent lighting.

An Emergency setting for Indoors with a 3200 K setting or Outdoors in with a 5600 K filter turret setting.

## 13 [SET] ACCUMULATED RECORD TIME RESET/ CAMERA SET-UP

A. ACCUMULATED RECORD TIME RESET TO ZERO.

Accumulated Record Time is the approximate total VTR Record Time in minutes and seconds, based on the duration between pushing the VTR trigger.

If this is selected in Camera Setup for the Status Display 1 mode the Status display 2 mode will show Remaining Record Time.

TO CLEAR

● First Push the SET button once.
● Then Push the DOWN button once to set the current Accumulated Record time to zero.

This overlay mode is automatically cleared after 5 seconds.

B. CAMERA SET-UP:

● Select by pushing this button twice.

Continued pushing of this button will cycle through the Camera Set-Up Menu.

Pushing the adjacent UP or DOWN button will select a new function condition.

This overlay mode is automatically cleared after 5 sec.

Fundamental Camera operating and Set-up configuration includes:

● Contour (Detail) level,
● Master Black level,
● Iris/Exposure detection mode,
● Gain button assignment,
● Full Time Auto White/Auto White Memory 2,
● Cinema or Standard Safety Zone,
● Accumulated or Remain Record Time assignment,
● Lens Trigger type.

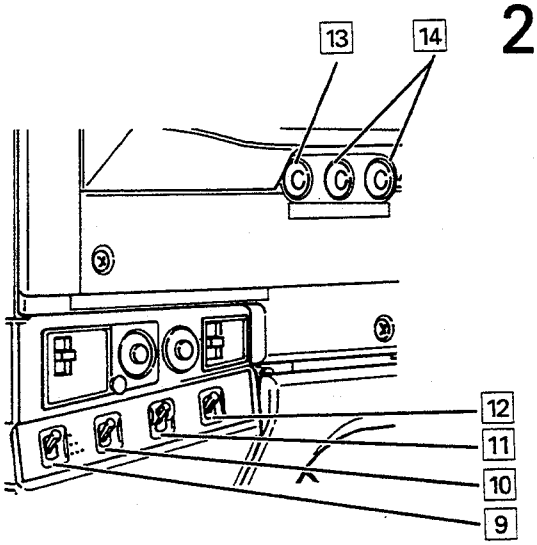


## 9 GAIN

| | | | | | |
|---|---|---|---|---|---|
| • | 0dB* | | | | |
| •• | ALC (0 - 18 dB) | 9dB* | 6dB | | |
| ••• | 18dB* | | ALC (0-18dB) | 9dB | 12dB |

* Factory Setting

## 10 STATUS DISPLAY

STATUS MODE 0 (No display)

F
I
G
S

STATUS MODE 1

F
I
L
ALC

(Audio Indicator)
↓
- - - - + - -

STBY 2 5 : 3 2 1 2. 4V

VTR STATUS REC TIMER BATT VOLTAGE

STATUS MODE 2

| | |
|---|---|
| WHITE BAL | MANUAL |
| FILTER | 5.6 K + ND |
| SHUTTER | NORMAL |
| GAIN | 0 dB |
| IRIS LEVEL | NORMAL |
| IRIS DETECT | NORMAL |
| AUTO SHOOT | ON |
| TAPE | < 10 |

## 11 SAFETY ZONE

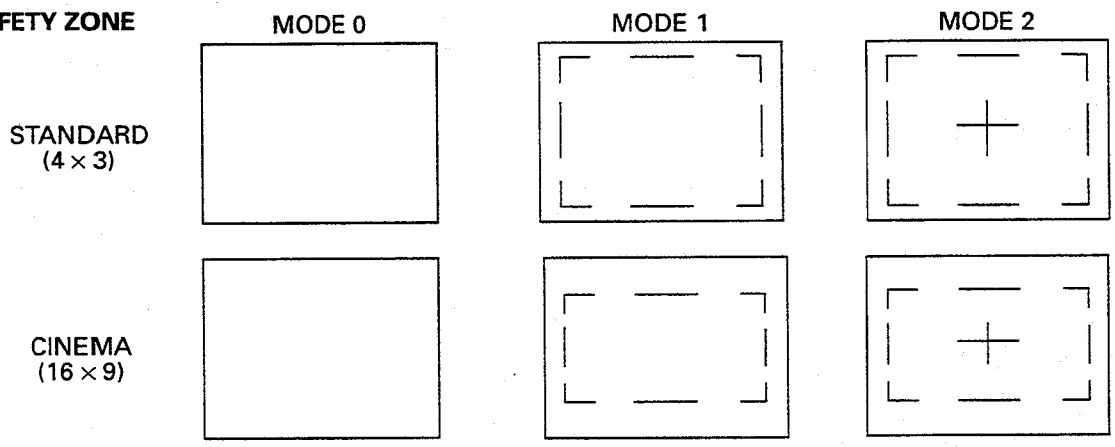


## 13 GAIN

ACCUMULATED RECORD TIME RESET

ACC REC TIME RESET
12:00
PUSH "DOWN" BUTTON

CAMERA SET UP

| | |
|---|---|
| CONTOUR | NORMAL |
| M BLACK | NORMAL |
| IRIS DETECT | NORMAL |
| GAIN | 0 : 6 : 9 |
| AW2 | AUTO |
| ZONE MODE | STD |
| REC TIME | REMAIN |
| LENS TRIG | NON LOCK |

# 2.4

### 14 [UP, DOWN] UP, DOWN BUTTONS

These buttons are used in selecting values for SHUTTER SPEED, VARIABLE SCAN, ACCUMULATED RECORD TIME RESET, and CAMERA SET UP.

When the new value is visible in the viewfinder status display the condition is activated; no further buttons need be pressed.

### 15 VIEWFINDER POST

This post is the viewfinder mount and also a handle mount. The VIEWFINDER SLIDE LOCKING RING is located here.

### 16 FILTER TURRET

This Turret changes the internal Filter.

The white number is the current Filter number corresponding to a color temperature listed in the table next to the Turret.

The Filter type is also shown in the Status Display 2 mode.

The orange numbers indicate the Filter to be selected by twisting the Turret in that direction.

Position 1 : Clear Filter, for use with color temperatures of 3200 degrees Kelvin.
Use indoors or outside at night.

Position 2 : "Outdoor" Filter, for use with color temperatures of 5600 degrees K.
Use outdoors or with HMI lighting.

Position 3 : "Outdoor" Filter + 1/16ND, for use with very bright conditions and color temperatures of 5600 degrees K.
6.3% of the light is passed on to the CCDs.

Position 4 : Cross Effect Filter. Gives highlights a Cross Star effect.
For use with color temperatures of 3200 degrees K.

### 17 LENS RETAINING RING

Hold the lens and use the knob to twist the ring counter-clockwise to release lens.

To mount lens make sure the lens guide pin fits well, and then twist the ring clockwise until firm.

### 18 VIEWFINDER CONNECTOR

Connect VF-P115 or VF-P400 here.

### 19 [AUTO] WHITE BALANCE/AUTO SETUP/BLACK BALANCE

- First position a white object to occupy 80% of the center of the image.
- The Lens Iris can be in Auto or Manual Mode.

White Balance:

Is performed by pushing this button upward once momentarily.

Is not activated in Preset, Full Auto Shooting and Full Time Auto White mode.

Auto Set Up/Black Balance:

Automatic Black Balance, then White Balance then Black Balance again are performed by pushing this switch down once momentarily.

Black balance only is performed in Preset, Full Auto Shooting and Full Auto White Mode.

The Iris will be held shut by the Auto Iris during Black Balance.

### 20 [ZEBRA] ZEBRA ON/OFF SWITCH (VIDEO LEVEL INDICATION)

This switch turns on and off the Zebra stripe pattern in areas of highlights between 80 to 90 percent brightness.

### 21 LENS CONTROL CONNECTION

Connect either 12pin lens control cable here.

Verify that the lens in use has a locked or unlocked (momentary) VTR trigger, and adjust the Lens Trigger in Camera Set-up.

# 2.4

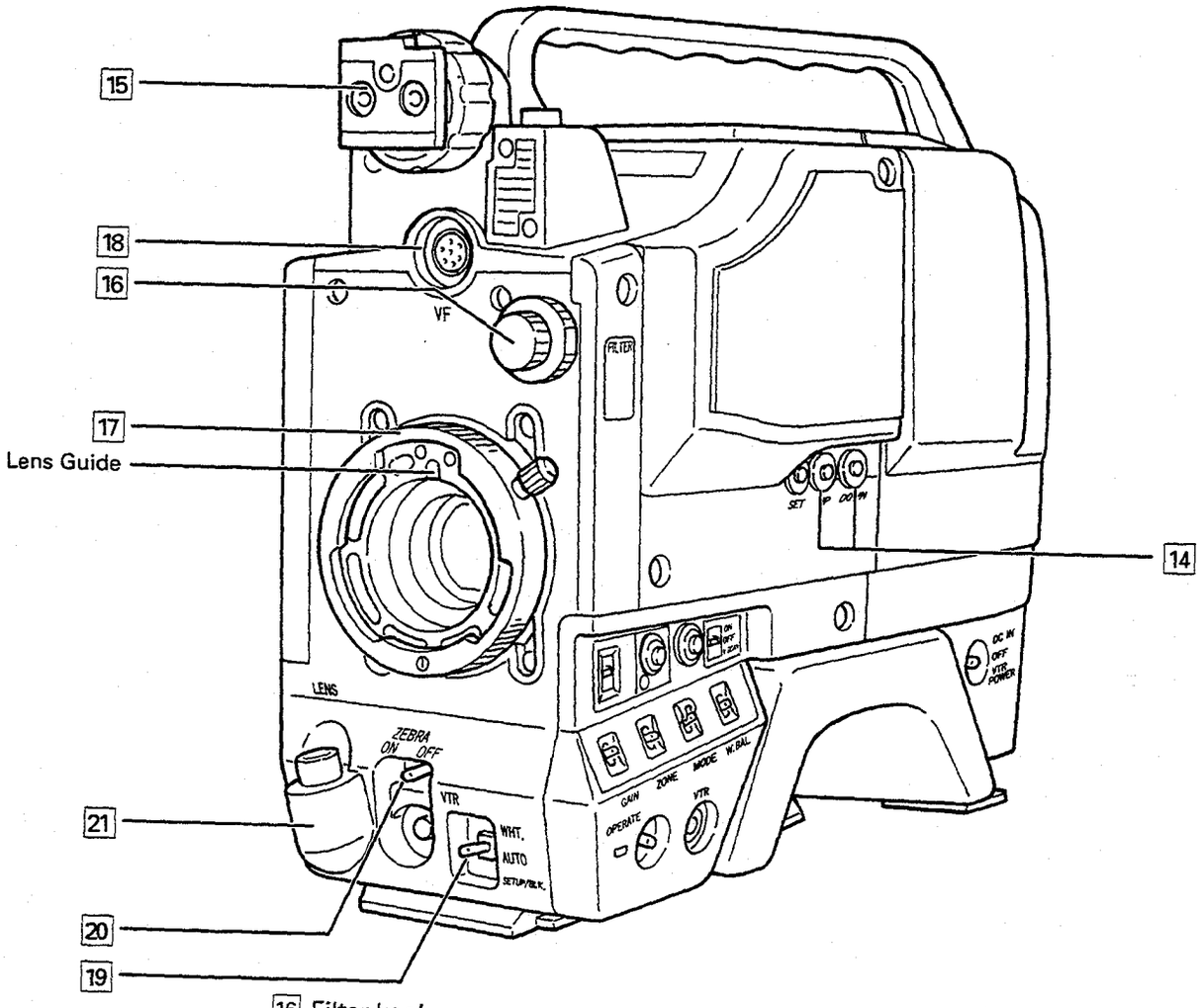


16 Filter knob

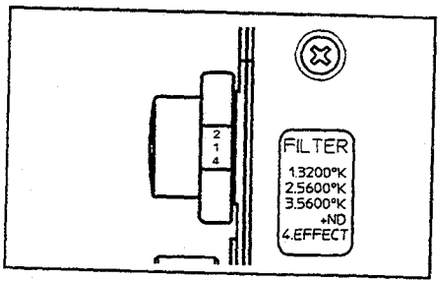


19 View Finder Display

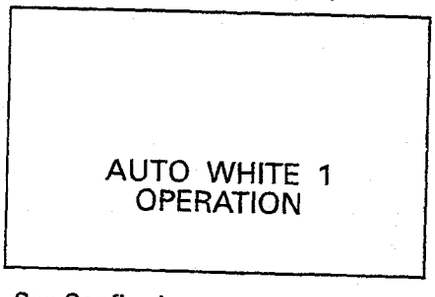


See Confirming messages page 29

20 ZEBRA DISPLAY

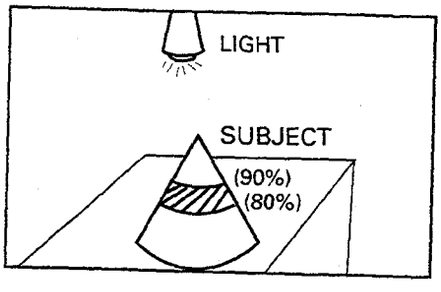


21 12 Pin Chart

| Pin No. | Function | Pin No. | Function |
|---|---|---|---|
| 1 | RET switch | 7 | IRIS position |
| 2 | VTR trigger | 8 | IRIS AUTO/MANU |
| 3 | GND | 9 | x2 extender |
| 4 | IRIS enforce AUTO | 10 | ZOOM position |
| 5 | IRIS control | 11 | – |
| 6 | 12V DC | 12 | – |

# 2.4

## 2.4.2 SWITCHES AND CONTROL OF CAMERA INPUT AND OUTPUT, ACCESSORY MOUNTS

### 22 HANDLE WITH ACCESSORY SHOE AND STUDIO VIEWFINDER MOUNT

### 23 MICROPHONE INPUT (POWERED CAMERA MIC)

This unbalanced six pin connector is for the JVC powered Camera Microphones. 9V power is supplied from the camera.

Stereo: MV-P612, MV-P602 Mono: M-K50.

Select this connector with the CAM position of the Mic Select Switch (#41) on the KA-27 or VTR.
For MV-P602 and M-K50, additional Cable (VC-P740) is required.
For other microphones see the KA-27 microphone input (#38).

### 24 MICROPHONE HOLDER SCREWS

The KA-A27 included Microphone holder can be mounted here.

### 25 [RET] RETURN VIDEO SWITCH

Switched to On, RET selects the "RETURN" E to E signal from the VTR or RM-P300 Camera Control Unit to be shown in the viewfinder. There may be an identical switch on the lens servo.
**WARNING!** With this switch activated the E to E viewfinder video DOES NOT include Status or Set-Up information if the deck is in Record or Record Pause mode.

Selecting certain functions will automatically switch the viewfinder back to Camera Video during operation:
Auto White, Auto Set, Auto Black, Camera Set-Up, Shutter On, Variable Scan On.

### 26 [MIC] MIC STEREO/MONO

Selects the type of Audio Signal sent to the VTR from the Camera or Adapter microphone inputs.

STEREO : To Record independent signals on the Right and Left channels in the Docked configuration only.
**WARNING!** A portable VTR connected by a cable can only record the Left microphone channel.
**WARNING!** A Mono microphone will only record on the left channel of the docked VTR.

MONO : To record the same signal on both channels, Mono or Stereo microphone, Docked or Undocked.

### 27 GENLOCK PHASE SETTINGS

H : Adjusts the Horizontal Sync Phase of the camera video with respect to the Reference Sync signal sent to the Genlock Input.

SC : Adjusts the Color Subcarrier Phase 360 degrees with respect to the signal sent to the Genlock Input.

### 28 CHEST REST CONNECTION

Screw in the optional KA-111 chest rest here.

### 29 TRIPOD BASE RETAINING WEDGE

The KA-510 quick release Tripod Base must be used to put the camera on a tripod or camera stand. Make sure both ends of the camera head are firmly seated with both wedge #29 and clip #35.
Wedge #29 should only be locked into place if the rear clip #35 is engaged
The front clip will hold the camera safely, but without engaging the rear clip, the camera will tend to move slightly in the base.

### 30 REMOTE CONNECTOR (6 PIN)

This remote connector allows the connection of the RM-LP80 stand alone remote control unit (optional) and the Computer Control Cables (optional).

### 31 VIDEO OUTPUT (COMPOSITE)

Video output is for Camera Video only. Return Video from the VTR, or Viewfinder status are not available.

### 32 GENLOCK INPUT

External Reference Composite video or black burst video input. (VTR video is not stable enough without a Time Base Corrector.)

# 2.4

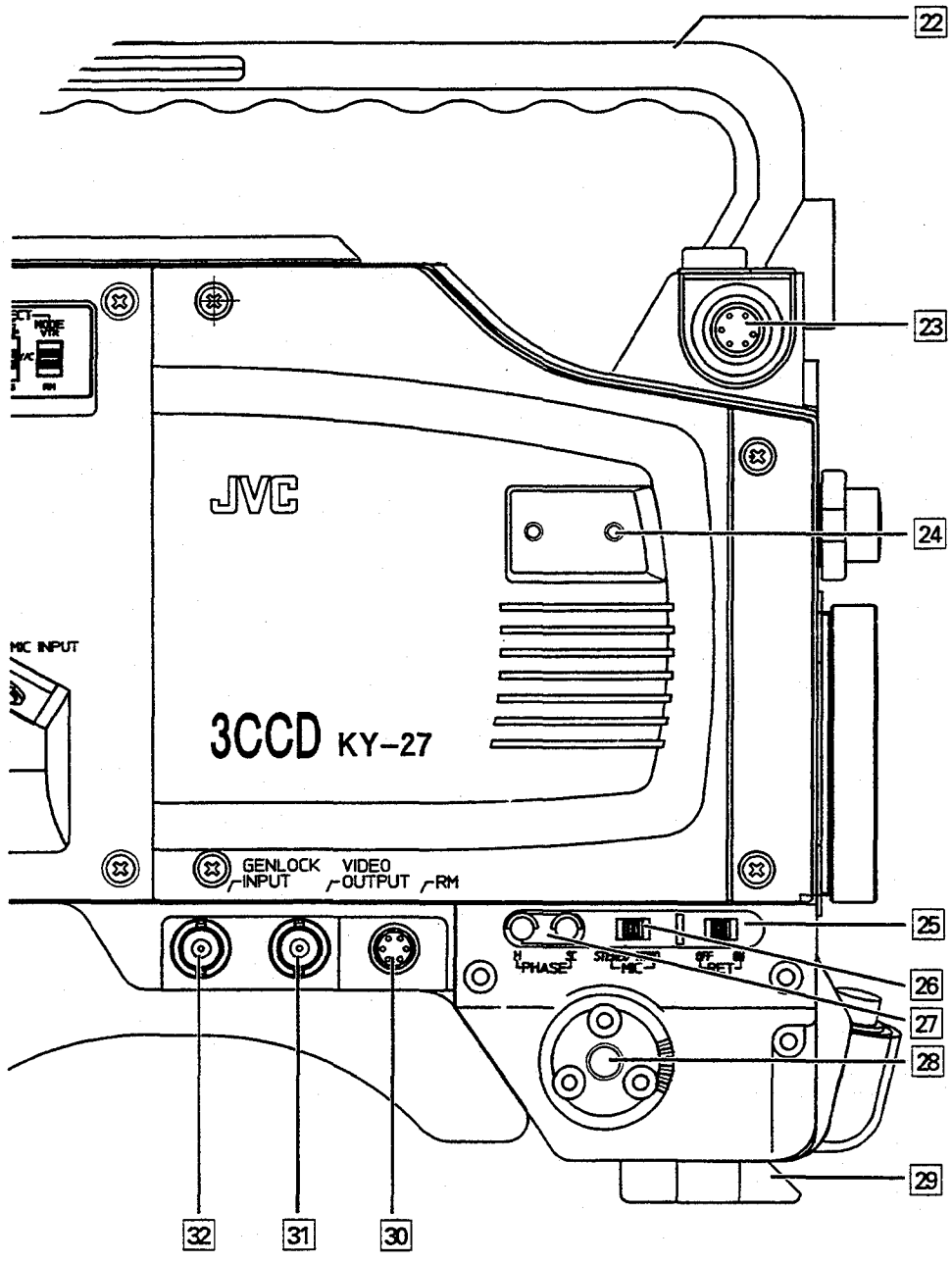


23 CAMERA MIC PIN CONFIG.

| Pin No. | Function |
|---|---|
| A | R (Hot) |
| B | +9 V DC |
| C | GND |
| D | L (Hot) |
| E | L (Cold) |
| F | R (Cold) |

30 REMOTE PIN CONFIG

| Pin No. | Function |
|---|---|
| 1 | GND |
| 2 | RM/LRM |
| 3 | GND |
| 4 | SID 2 OUT |
| 5 | SID 1 IN |
| 6 | +9V OUT |

# 2.4

## 2.4.3 OPTIONAL KA-27 CAMERA ADAPTER

### 33 VIDEO OUTPUT (Y/C 3.58 NTSC), (Y/C 4.43 PAL)

Video output is for Camera Video only, Return Video from the VTR, or Viewfinder status is not available. This output is always active.

### 34 DC INPUT

This connector is designed for 12 volts DC input.
JVC suggests the use of the AA-P250 in standalone and most docked situations.
The camera will work between 10.5V and 15V.

This connector is activated by the MAIN POWER SWITCH #1, and has priority over the Internal Battery Pack mounted on the back of the KA-27. Turn off the camera before connecting or disconnecting the DC power.

### 35 TRIPOD MOUNT RETAINING CLIP

Make sure KA-510 tripod base is firmly seated first with camera retaining clip #35 and then locked in place with front retaining wedge #29.
The front clip and wedge will hold the camera safely, but without engaging the rear clip,the camera will tend to move slightly in the base.

### 36 REMOTE CONTROL/VTR MULTIPIN CONNECTOR

Use to connect to a VTR or the RM-P200 and RM-P300 Camera Control Units. See VTR and Audio Output select switches #42 - #45 for proper signals.

### 37 INTERCOM CONNECTOR

This is for talk back intercom use with the Camera Control Unit. The Headset should be configured with a connector with the proper tip/ring/sleeve configuration and headset and microphone impedance. This changes with different applications of the remote control units RM-P200 or RM-P300.

### 38 MICROPHONE INPUT (UNBALANCED)

This is an input for mic level only; with an unbalanced XLR three pin connector. (See chart of pin configuration)

### 39 INTERCOM LEVEL CONTROL

Controls the volume of the intercom headset connected to the Intercom connector.

### 40 EARPHONE CONNECTION

This connector usually monitors the E to E signal returned from the VTR or program audio from the remote control unit only.
The VTR may need to be in record pause mode for the camera or adapter microphone inputs to be monitored.
Some VHS only VTRs do not send return Audio.

• Refer to the section 2.3.2 "MODE SELECT switch" in the KA-27's service manual (No. 60073) on page 3-1.

### 41 CAMERA / ADAPTER MIC SWITCH

This switch determines whether the Camera mic input or the Adapter mic input is active.

### 42 MIC AUDIO OUTPUT LEVEL SWITCH

Different VTRs or applications of Remote Control Units may require Line or Mic Audio Output levels.
The -20 dB setting activates the camera/adapter mic preamp to bring the output level up to -20dB through the 26 pin cable connection. See chart page 36.

### 43 COMPONENT VTR SELECT SWITCH MII/BETA

This controls the signal levels for the different Component standard outputs.

### 44 SIGNAL OUTPUT: COMPONENT/ Y/C /RGB

The signal sent through the 26 pin connector can be selected for one of these three signals in addition to composite video. See chart page 36.

### 45 VTR/REMOTE CONTROL UNIT SWITCH

- Set to VTR for any kind of VTR connection.
- Set to Remote if RM-P300 or RM-P200 is connected.

**Note**: Certain 10 pin connector VHS VTRs with Ground Start trigger modes require an internal adjustment to the KA-27. Please consult your service representative. See chart page 36.
This unit is factory set for a +5V trigger.

### 46 BATTERY HOLDER [BH-P27]

Shown here is the standard battery holder. This can be used for NP-1 type and JVC NB-G1 Batteries.
The 4pin 12V DC connector has priority over this battery holder.
Other manufactur's battery holders can be attached instead.

# 2.4

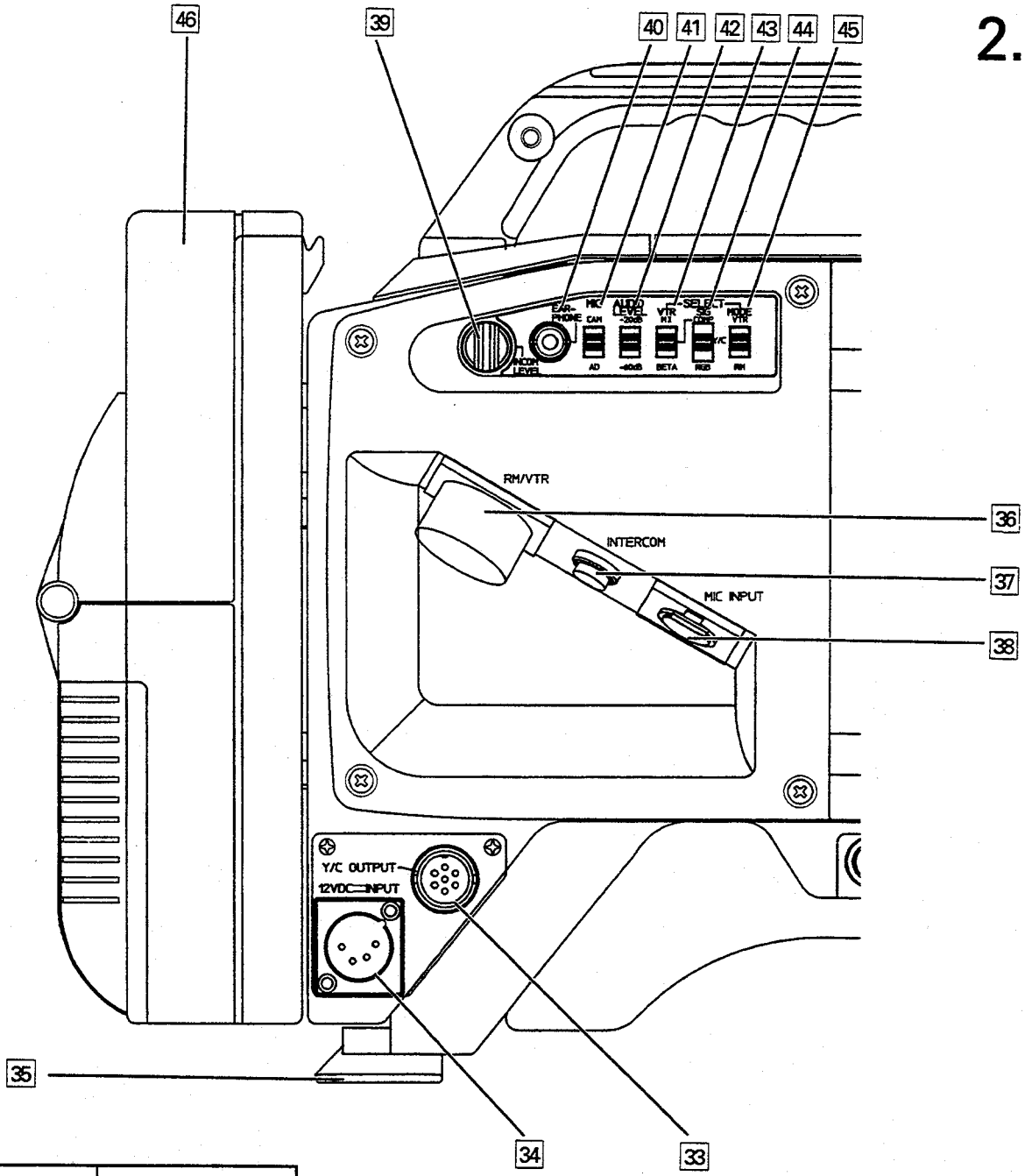


33

| Pin No. | Function |
|---|---|
| 1 | Y OUT |
| 2 | GND |
| 3 | NC |
| 4 | NC |
| 5 | C OUT |
| 6 | GND |
| 7 | NC |

34

| Pin No. | Function |
|---|---|
| 1 | GND |
| 2 | NC |
| 3 | NC |
| 4 | +12V IN |

37

| Pin | Function |
|---|---|
| TIP | MIC |
| RING | EARPHONE |
| SLEEVE | GND |

38

| Pin No. | Function |
|---|---|
| 1 | GND |
| 2 | HOT |
| 3 | GND |

# 2.4

## 2.4.4 OPTIONAL VIEWFINDER VF-P115 (ENG)

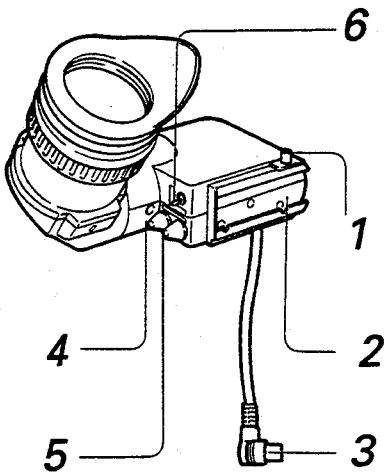


**1 SLIDE LOCK**

This stopper screw prevents the viewfinder from coming off the camera.

**2 VIEWFINDER SHOE**

Attaches to the Viewfinder Post on camera.

**3 VIEWFINDER CABLE**

Connect to camera socket #18.

**4 CONTRAST**

Controls the level of Viewfinder contrast.

**5 BRIGHT**

Controls the level of Viewfinder brightness.

**6 TALLY SWITCH**

Set this switch to off if you do not want to inform the subjects by the Tally light that they are being recorded.

**7 TALLY LIGHT**

Lights when recording is in progress.

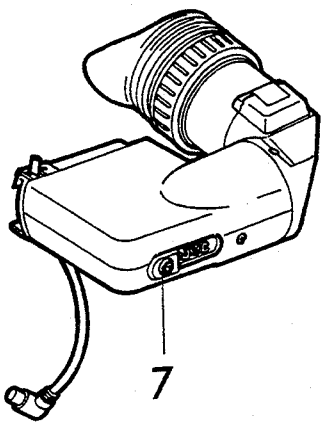


**8 EYEPIECE**

Blocks light from viewfinder screen and holds eye optics.

The Eyepiece can be opened to view the screen directly.

The Eyepiece can be rotated up and down for the best shooting position.

**9 EYEPIECE FOCUSING RING**

Loosen this ring and move the Eyepiece backward and forward to focus the viewfinder for the operators vision.

**10 VIEWFINDER SLIDE LOCKING RING**

This ring on the camera viewfinder post can be loosened to move the viewfinder to the left or right for the best operator comfort.

**WARNING!:** Avoid Over Heating if a light is mounted on the camera handle accessory shoe!

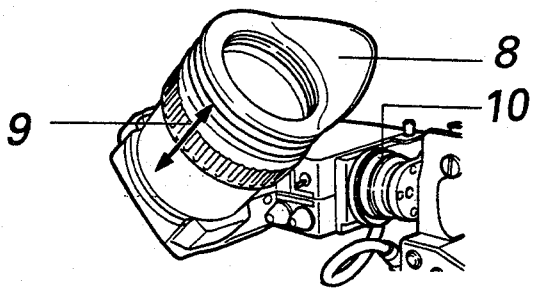


## 2.4.5 VIEWFINDER WARNING INDICATIONS

### 2.4.5.1 VIEWFINDER WARNING LIGHTS

**11 BATTERY LIGHT**

This lights red when battery voltage becomes too low for the camera to operate.

Some VTRs signal low battery with the REC/ALARM light.

**12 REC/ALARM LIGHT**

This light shines for these conditions.

Solid Green : ● While recording.

Blinks Green : ● While the VTR prerolls before recording.
- ● If the Tape is finishing.
- ● If the VTR Malfunctions.
- ● For some VTRs this indicates Low Battery.

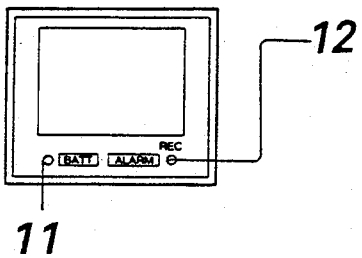

**TO CLEAR THE "BATTERY ALARM LIGHT"**

To clear the "BATTERY ALARM" warning light, the power must be turned OFF once on the camera.

If the VTR is powered separately, this means the camera must still be turned OFF once to clear the display.

## 2.4.5.2 VIEWFINDER WARNING MESSAGES

**Function Failures:**

**WHITE BALANCE/BLACK BALANCE function**

WHITE BALANCE/BLACK BALANCE

| | |
|---|---|
| AUTO WHITE 1, 2 OBJECT ERROR | Check whether the object being shot is white enough. Check for proper filter |
| AUTO WHITE 1, 2 LOW LIGHT ERROR | Check to see if increasing gain or lighting will help. |
| AUTO BLACK ERROR | Auto black has been interrupted. |
| AUTO BLACK LENS NOT CLOSED? | Check that Auto iris is on, or that the lens is not connected |

AUTO WHITE 1
OBJECT ERROR

**Automatic Warnings:**

Automatic Warnings:

LOW BATTERY This blinks when the VTR or Camera battery level falls too low.

< 10

This indication blinks with docked professional SVHS VTRs and docked Betacam SP VTRs with the KA-B20 adapter.

There are less than 10 minutes tape.

< 5

This indication blinks with docked MII VTRs with the KA-M20 adapter and docked Betacam SP VTRs with the KA-B20 adapter.

There are less than 5 minutes tape.

< 5

TAPE NEAR END

This indication blinks with docked JVC professional SVHS VTRs, docked MII VTRs with the KA-M20 adapter, docked Betacam SP VTRs with the KA-B20 adapter.

There are less than 3 minuites of tape remaining.

**Messages displayed for JVC Docked Professional SVHS decks only:**

| | |
|---|---|
| TAPE END | The tape has run out. |
| VTR WARNING | The VTR is not operating due to Condensation on the video heads, Servo failure, or other malfunctions |

TAPE END

VTR OP MISS? VTR OPERATION MISSED.

- The Docked JVC SVHS VTR may not have been placed in Record/Pause mode. Press the Record and Play buttons to activate Record/Pause.
- The Camera/VTR switch #2 may be in ON/SAVE. The Save function stops head rotation and turns off the power to the circuitry in JVC Professional SVHS decks.
- Check the Operate switch on SVHS Dockable VTRs. This activates the SAVE function.
- Check for missconnection.

VTR TRIGGER

VTR OP MISS ?

# 2.4

## 2.4.6 STATUS INDICATIONS (ON SCREEN)

*1* To manually check important Status Conditions, activate the overlay display by pushing the Display Select switch (Camera #10 ) up momentarily. The display cycles between 3 modes.

Mode 0: Engaged Special Functions and video only are displayed on the right side of the screen.

F = Full Time Auto White
I = Iris level; Over or Under
G = Gain Up; 6dB, 9dB, 12dB, 18dB,
L = LOLUX
S = High Speed Shutter or Variable Scan
FAS = Full Auto Shooting
ALC = Automatic Gain / Variable Shutter mode

STATUS MODE 0

F
I
G
S

Mode 1: In addition, pressing the DISP. SELECT switch up once also shows:

VTR Condition: SAVE, STANDBY, REC.
Recording Time: Accumulated or Remaining minutes and seconds.
Battery Voltage: Volts,Tenths of Volts
Audio Levels: VU readings (seven steps)

-18 -12 -6 -3 0 +3 +6

The Audio Level display is available only from dockable VTRs.

VTRs without return audio or portable VTRs will not give an audio level display.

The viewfinder 0 dB level must be set to match the VTR meter 0 d B audio level.

This is done with the VTR monitor level adjustor.

Otherwise the viewfinder display will not be accurate.

STATUS MODE 1

----+--
"STBY" 00:00 12.4V
VTR STATUS REC TIMER BATT VOLTAGE

Mode 2: Press Display button Twice.

This safely shows most camera settings. Parameters can not be adjusted.

| | |
|---|---|
| WHITE BAL | : PRESET, AUTO 1, AUTO 2, FAW, MANUAL |
| FILTER | : 3.2K, 5.6K, 5.6+ND, Effect |
| SHUTTER | : 1/100 (U version), 1/120 (E version) to 1/2000, Variable Scan Value |
| GAIN | : OdB, 6dB, 9dB, 12dB, 18dB, LOLUX, ALC |
| IRIS LEVEL | : OVER, NOR, UNDER |
| IRIS DETECT | : NOR, AVG, PEAK, APB |
| AUTO SHOOT | : ON, OFF |
| REC TIME | : (REMAIN) <10,<5, TAPE NEAR END, TAPE END<br>(ACCUM) Minutes:Seconds |

STATUS MODE 2

| | |
|---|---|
| WHITE BAL | MANUAL |
| FILTER | 5.6 K + ND |
| SHUTTER | NORMAL |
| GAIN | 0 dB |
| IRIS LEVEL | NORMAL |
| IRIS DETECT | NORMAL |
| AUTO SHOOT | ON |
| TAPE | < 10 |

## 2 CAMARA SETUP

To check the CAMERA SET UP press the #13 SET button twice.

**WARNING!** This Mode can also change a setting if the UP or DOWN button is pressed.

| | |
|---|---|
| CONTOUR | : -10 to -1, NORMAL, 1 to 10 |
| M BLACK | : -10 to -1, NORMAL, 1 to 10 |
| IRIS DETECT | : AVG, PEAK, APB, NORMAL |
| GAIN | : One Dot:Two Dots:Three dots = 0:6:9, 0:6:12, 0:6:ALC, 0:9:18, 0:ALC:18 |
| AW2 | : AUTO, FAW |
| ZONE MODE | : STD, CINEMA |
| REC TIME | : REMAIN, ACCUM |
| LENS TRIG | : NONLOCK, LOCK |

CAMERA SET UP

| | |
|---|---|
| CONTOUR | NORMAL |
| M BLACK | NORMAL |
| IRIS DETECT | NORMAL |
| GAIN | 0 : 6 : 9 |
| AW2 | AUTO |
| ZONE MODE | STD |
| REC TIME | REMAIN |
| LENS TRIG | NON LOCK |

## 3 CONFIRMING MESSAGES

The Status Display mode 0 and mode 1 special Function Indications are present while each function is engaged.

In addition the following messages appear briefly for confirmation while various functions are turned on or off.

White Balance:

| | |
|---|---|
| WHITE BAL AUTO 1, | WHITE BAL AUTO 2, |
| WHITE BAL FAW, | WHITE BAL PRESET |
| AUTO WHITE1 (OR 2) OPERATION | AUTO WHITE1 (OR 2) COMPLETED |

Black Balance:

| | |
|---|---|
| AUTO BLACK OPERATION | AUTO BLACK COMPLETED |

Filter:
FILTER 3.2K, 5.6K, 5.6K+ND, FILTER EFFECT

Gain:
GAIN 0dB, 6dB, 9dB, 12dB, 18dB, GAIN ALC

Shutter:
SHUTTER 1/100 (U version)/1/120 (E version), 1/250, 1/500, 1/1000, 1/2000, SHUTTER NORMAL

Variable Scan:
SHUTTER 1/60.2 — SHUTTER 1/1966.7 (U version)
SHUTTER 1/50.0 — SHUTTER 1/1953.1 (E version)

Iris:
IRIS OVER, IRIS NORMAL, IRIS UNDER

LOLUX:
LOLUX ON, LOLUX OFF

Zebra:
ZEBRA ON, ZEBRA OFF

Full Auto Shooting:
Full Auto ON, Full Auto OFF

## 4 VIEW FINDER ABBREVIATIONS

| | |
|---|---|
| ACCUM. | — Total Time with Record Trigger On |
| AUTO | — Auto White Memory mode |
| ALC | — Automatic Level Control for Iris and Shutter |
| APB | — Automatic Average/Peak Balance |
| AVG | — Average exposure detection mode |
| AW2 | — Auto White Memory 2 |
| CINEMA | — 16:9 Safety Zone ratio |
| CONTOUR | — Detail enhancement |
| EFFECT | — Cross Star Effect 3200 K |
| F | — Full Time Auto White engaged |
| FAS | — Full Auto Shooting engaged |
| FAW | — Full Time Auto White |
| G | — Gain engaged; 6dB, 9dB, 12dB, 18dB |
| I | — Iris Level Over or Under engaged |
| IRIS DETECT | — Detection mode on which subject exposure is based. |
| IRIS LEVEL | — Over or under exposure mode. |
| L | — LOLUX engaged |
| LENS TRIG | — Different Lens trigger modes |
| LOCK | — Lens trigger mode ( Usually 8pin ) |
| LOLUX | — Highest Electronic Gain |
| MANUAL | — White Balance control by Remote CCU |
| M BLACK | — Master Black |
| NONLOCK | — Lens trigger mode (Usually 12 pin) |
| NORMAL | — Normal |
| PEAK | — Peak exposure detection mode |
| REMAIN | — Approx. remaining Tape in minutes |
| S | — Shutter or Variable Scan engaged |
| SAVE | — VTR in power save mode |
| ST-BY | — VTR in standby to record mode |
| STD | — 4:3 Safety ratio |
| TAPE NEAR END | — Less than 3 minutes |
| ZONE MODE | — Safety Zone aspect ratio |

| | |
|---|---|
| 3.2K | — 3200 degrees Kelvin color temperature |
| 5.6+ND | — 1/16 light admitted, 5600 K color temp. |
| <10 | — Less than 10 minutes (Some VTRs, see page 27) |
| <5 | — Less than 5 minutes (Some VTRs, see page 27) |

# 2.4

## 2.4.7 LENS

A typical lens available with this camera is the Fujinon A14x10BRM-12.

| | | |
|---|---|---|
| A | = | 2/3" bayonet type lens |
| 14x | = | 14 times zoom lens |
| 10 | = | 10mm maximum wide angle |
| BRM | = | No extender, Professional lens |
| 12 | = | 12 pin control connector |

### 1 FOCUS RING

Manual focus ring.
Focus distance indicated.

### 2 ZOOM LEVER/RING

Manual Zoom ring with lever.
Deactivate Servo Zoom with switch #12.
Lens Zoom Length is indicated.

### 3 IRIS RING

Manual Iris ring
Deactivate Auto iris with switch #6.

### 4 BACK FOCUS RING

For Set-up Back Focus adjustment only.
Secure with the Screw knob.

### 5 MACRO FOCUS RING (CLOSE-UP)

Manually focus with this ring at ranges as near as 2 cm from the lens front with the ring turned completely clockwise.

Normal focusing and zooming not possible in this mode.

### 6 IRIS MODE SWITCH

A : Auto iris On and Remote operation.
M : Manual iris operation.

### 7 MOMENTARY AUTO IRIS

In Manual Iris mode (M), pushing this button activates the Auto Iris Function while it is held down only.

### 8 ZOOM SERVO CONTROL

Pushing this lever in the W direction makes the lens move wider.

Pushing this lever in the T direction makes the lens move tighter.

Pushing harder changes the speed of the Zoom. Turn this lever on with switch #12.

### 9 RETURN VIDEO (RET)

The E to E signal from the VTR attached or the Remote Control Unit can be monitored in the viewfinder while pushing this switch.

Viewfinder Status information is not available.

### 10 VTR TRIGGER

To start shooting push once.
To stop shooting push again.

### 11 REMOTE ZOOM/IRIS CONTROL CONNECTOR

For use with Studio or Teleconferencing remote control units.

### 12 ZOOM MODE KNOB

S : Servo Zoom On
M : Manual Zoom mode.

### 13 FILTER POSITION

Protect the lens with a 72mm/0.75 pitch Clear or UV filter by screwing on to the front inside of the lens hood.

Other filters can be used for various effects.

### 14 REAR LENS SURFACE

Protect with special cover.

### 15 REMOTE FOCUS CONTROL CONNECTOR

To connect with an optional focus servo unit.

### 16 S.

Iris speed adjusting potentiometer.

TYPICAL LENSES AND FILTER SIZES

| | |
|---|---|
| Fujinon | |
| A13x10 | 72mm |
| A14x10 | 77mm |
| A14x8.5 | 77mm |
| A16x9.5 | 77mm |
| Canon | |
| J13ax9B | 77mm |
| J14x8B | 105mm |
| J15x9.5 | 82mm |
| J18x8.5B | 105mm |
| Nikon | |
| S13x9B | 72mm |
| S15x8.5 | 82mm |
| S19x8 | 94mm |

# 2.4

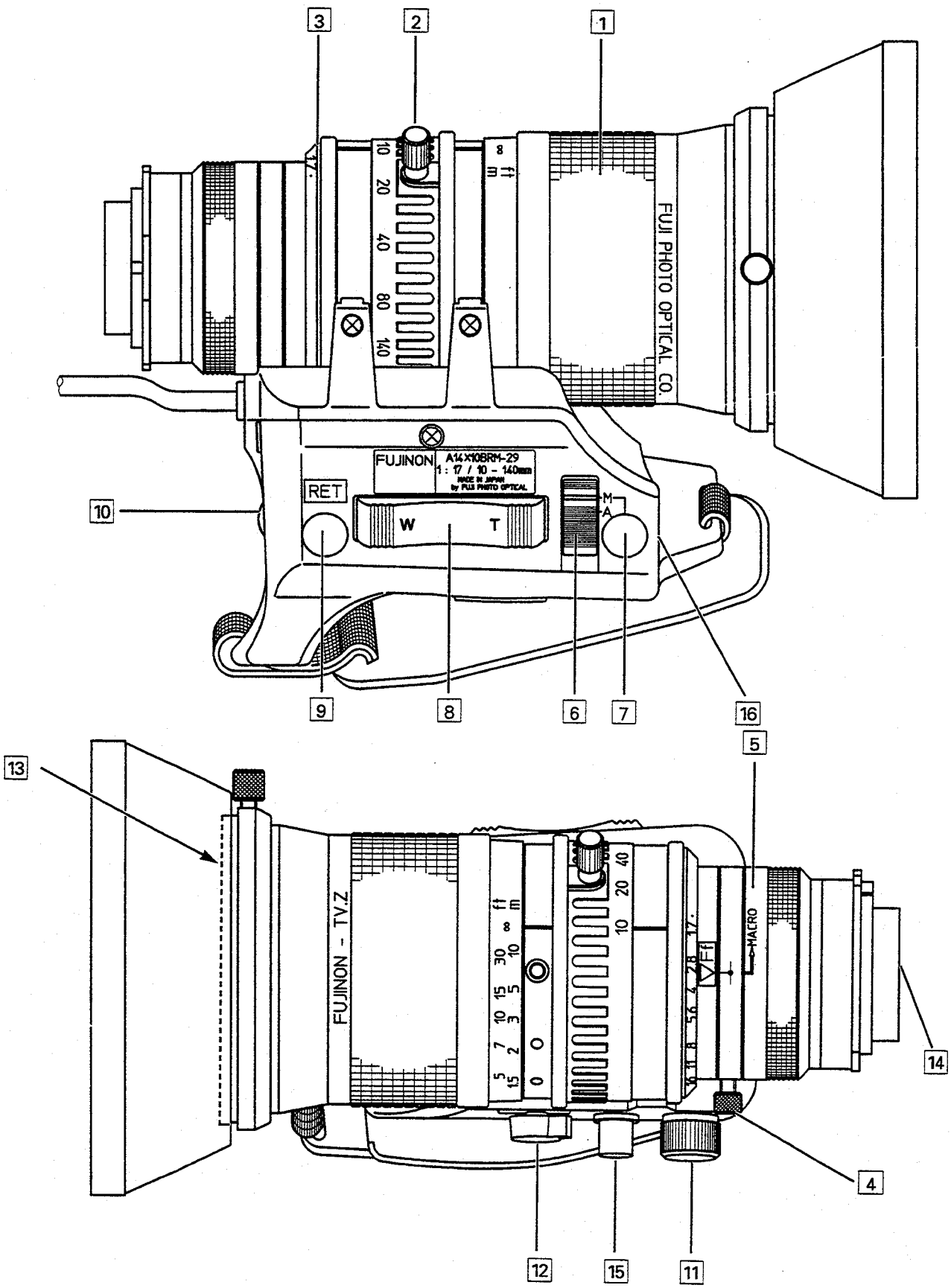
1
2
3
4
5
6
7
8
9
10
11
12
13
14
15
16
FUJI PHOTO OPTICAL CO.
FUJINON
A14X10BRM-29
1 : 17 / 10 - 140mm
MADE IN JAPAN
by FUJI PHOTO OPTICAL
RET
W
T
M
A
FUJINON - TV.Z
MACRO

# 3 OPERATION

## 3.1 POWER SUPPLY

There are five methods of supplying power to KY-27:

KA-27 or Docked VTR Master Power switch set to DC:
- AC Power Adapter through KA-27/VTR 4pin DC plug
- 12V DC Battery through KA-27/VTR 4pin DC plug
- Battery Holder mounted on KA-27/VTR

KA-27 Master Power switch set to RM/VTR:
- VTR through multi pin cable
- Remote Control Unit RM-P200 or RM-P300 through multi pin cable

### 3.1.1 TYPICAL BATTERY POWER USAGE

The camera, viewfinder and KA-27 adapter power use is 12.4W. An 2.3 ampere hour battery should last about 110 minutes powering the camera alone.

A typical docked VTR can use between 8.5W and 16W DC power. The camera and viewfinder alone use about 11.9W.

An average 2.3 Ampere/Hour NP-1B type battery should last between 40 and 70 minutes based on the VTR.

Additional use of the Lens Zoom will reduce battery life.

Additional use of the Save function will extend battery life.

This chart is for expected battery life.

This configuration is for the KY-27 with Lens and the VF-P115 Viewfinder. Portable VTR's are with the KA-27 adapter.

Sony battery times based on Sony Literature.

| WATTS | DOCKED/PORT.VTR | | BATTERY | BAT TIME |
|---|---|---|---|---|
| 54.4 | 27 | KR-M440 | 5ah BATT | 80 |
| 41.4 | 27 | BVW-50 | BP-90 | >90 |
| 31.4 | 27 | BR-S405/411 port | NB-G1 | 30 |
| 29.3 | | | | |
| 28.5 | 27 | BVV-5 port | NP-1B | 40 |
| 28 | 27 | BR-S411 dock | NP-1B | 40 |
| 27 | 27 | KR-M240 | NB-G1 | 40 |
| 25.4 | 27 | BVU-150 | 2 NP-1B | 90 |
| 26 | 27 | BVV-5 dock | NP-1B | 45 |
| 24 | 27 | BR-S420C | NP-1B | 55 |
| 22 | 27 | PVV-1 | NP-1B | 60 |
| 20.9 | 27 | EVV-9000 port | NP-1B | 65 |
| 20.5 | 27 | EVV-9000 dock | NP-1B | 70 |
| 12.4 | 27 | KA27 | NP-1B | >110 |
| 11.9 | 27 | VF ONLY | — | — |

This table is for Typical and Maximum power usage. Typical power usage is for operation of normally adjusted camera. Maximum power usage is for extreme situations.

| | | Typical | | Maximum |
|---|---|---|---|---|
| Camera<br>Viewfinder | KY-27<br>VF-P115 | 9.6W<br>2.3W | 800mA<br>190mA | 10.2W<br>3.0W |
| Subtotal | | 11.9W | 990mA | 13.2W |
| Camera Adapter | KA-27 | .5W | 40mA | 1.8W |
| Total | | 12.4W | 1.03A | 15.0W |

### 3.1.2 BATTERY CARE

*1* Depending on the battery type, procedures to preserve the battery life are important.

With NiCad batteries such as NB-G1 and NP-1B the battery should be discharged down to the level that shuts off the camera before recharging.

Otherwise a memory condition will eventually limit the low end of the discharge level and reduce the battery operating time.

Check instructions for other types of batteries.

*2* Before recording, recharge the battery pack. Several battery packs should be kept charged according to the length of time shooting in the field.

For NB-G1 batteries the AA-G10 sequential charger can handle the successive charging of 4 batteries. The AA-P250 can charge 1 battery at a time.

The AA-G10 also has a 4Amp power capacity for supplying 12V DC to the camera.

*3* The Battery level can be monitored using the STATUS 1 DISPLAY. Press the DISPLAY button up in the DISP. SELECT position once.

The camera is set to turn off at 10.5 volts.

Check your VTR manual for minimum VTR levels.

*4* Low Battery levels are indicated by flashing overlay warning message and red "BATT" light for camera voltage.

A flashing Green "ALARM" Light indicates Low VTR voltage.

*5* Do not leave the battery pack in a place subject to high temperatures. This could damage the battery beyond repair.

*6* Keep batteries warm (around 72 degrees F) when shooting under cold conditions. Battery use is restricted when cold.

## 3.1.3 THE STANDARD BATTERY HOLDER FOR NB-G1 AND NP-1B TYPE BATTERIES.

1 Press the release button to open the cover.

2 For NB-G1 use swing out the battery retainer.
For NP-1B type use the retainer should be shut.

3 Install the battery pack with the terminals facing the camera.

4 With NB-G1 batteries close the battery retainer, and then close the cover.

IF THE COVER IS CLOSED WITHOUT REPLACING THE BATTERY RETAINER THE BATTERY RETAINER MAY BE DAMAGED.

For NP-1B batteries close the cover.

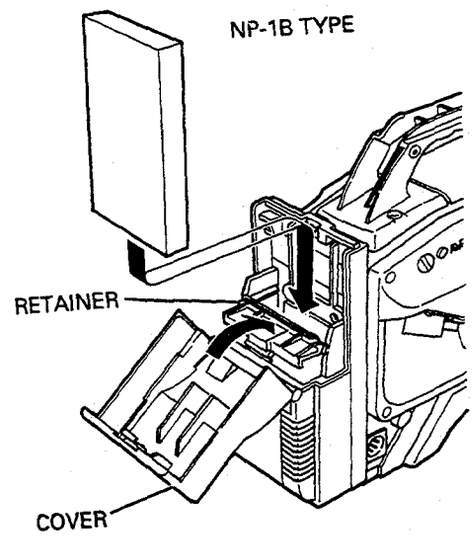


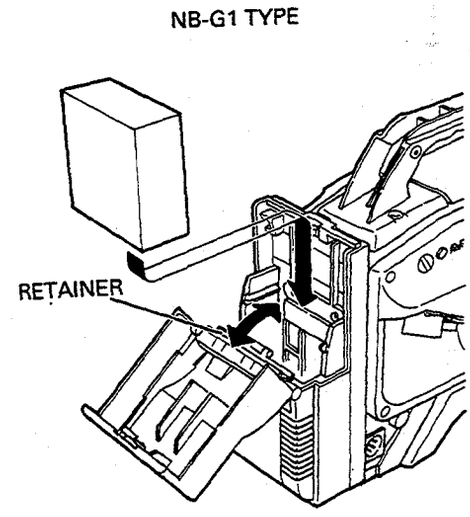


## 3.1.4 OTHER BATTERY HOLDERS

Battery Holders from other manufacturers can be mounted for internal battery use using provided mounting threads and power connector.
Remove the standard Battery Holder first.

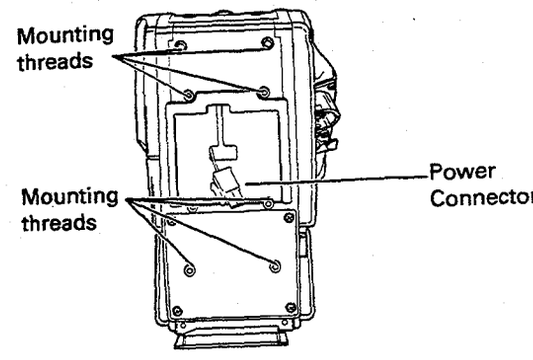

# 3.1

## 3.1.5 AC POWER ADAPTER AA-P250 AND CABLE

1 Connect the AA-P250 power to the KA-27 camera adapter or the VTR using the 4pin power cable supplied with the adapter.

2 Set the Charge/Camera switch on the AA-P250 to Camera.

3 Set the Master Power Switch on the KA-27 or VTR to "DC".

4 Turn the AA-P250 power switch to ON.

It is normally advisable for AC power to use the AA-P250 Power supply.The AA-P250 Power and 3Amp current capacity is correct for possible loads, even when configured for docking.

The AA-G10 power supply and charger has a 4Amp current capacity and is advisible for MII power demands.

IT IS ADVISABLE NOT TO USE POWER UNITS OTHER THAN SPECIFIED; OTHER WISE THE RECORDER MAY STOP DUE TO A TEMPORARY DROP IN SUPPLIED POWER .

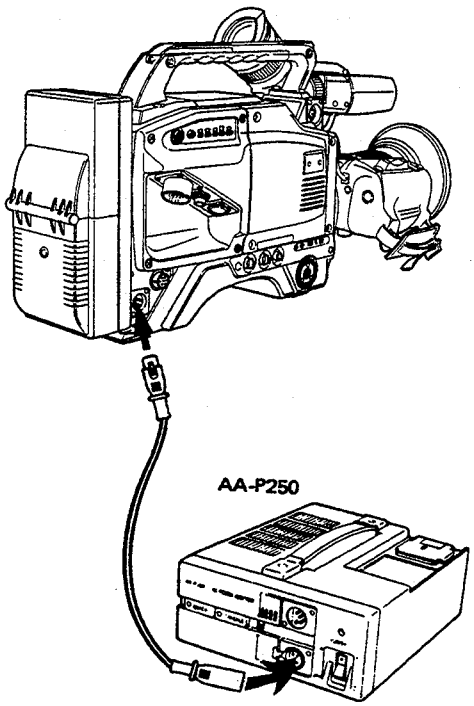


## 3.1.6 POWER FROM A PORTABLE VTR

Power from certain portable VTRs can be supplied through the multipin cable of the KA-27 adapter. The Master Power Switch of the KA-27 must be set to RM/VTR.

Please note that some Component or Digital portable VTRs can have power consumptions in the range of 42W to 65W when planning battery and AC power supply needs.

Set the master power switch to DC to power the camera independently.

## 3.1.7 POWER FROM OPTIONAL REMOTE CONTROL UNIT

The RM-P200 and RM-P300 Camera Control Units supply power through the multipin cable. The Master Power Switch of the KA-27 must be set to RM/VTR.

Set the master power switch to DC to power the camera independently.

# Every day BEFORE SHOOTING (BASIC OPERATION) 3.2

This section discusses all camera head related set up functions.

For use with a VTR see Section 5.1 or 5.2 after setting up the camera with this section.

## 3.2.1 Initial Set-up Preparations

### 1 POWER ON

1. First place a charged battery in the battery holder or connect DC power to the DC input.
2. Turn the AC power adapter on.
3. Switch the Master Power Switch to DC.

### 2 SAVE/ON

Turn the Camera/VTR switch to the Save/On middle position.

### 3 AUTO IRIS ON

Initially set the Lens iris control to Automatic.

Later take advantage of the Monentary Iris control to activate the cameras exposure system when needed.

### 4 FILTER SELECT

Choose the proper filter Selection for the lighting conditions

### 5 LEFT SIDE SWITCH POSITIONS

A. Iris Compensation switch, set to normal.

B. Shutter switch set to off position (1/60 NTSC, 1/50 PAL)

C. Gain switch set to 0dB. The single dot position is always OdB. (detail dots)

D. Cam/Bars switch set to CAM

E. Auto White Balance Memory switch set to 1 or 2.

### 6 CAMERA STATUS

Check by pressing the DISP. SELECT switch up twice. This screen should be visible, with the settings as indicated. Press again to eliminate the display.

### 7 CAMERA SET-UP

Check by pressing the SET switch twice.

This screen should be visible with the settings as indicated. The display will automatically disappear after 5 seconds.

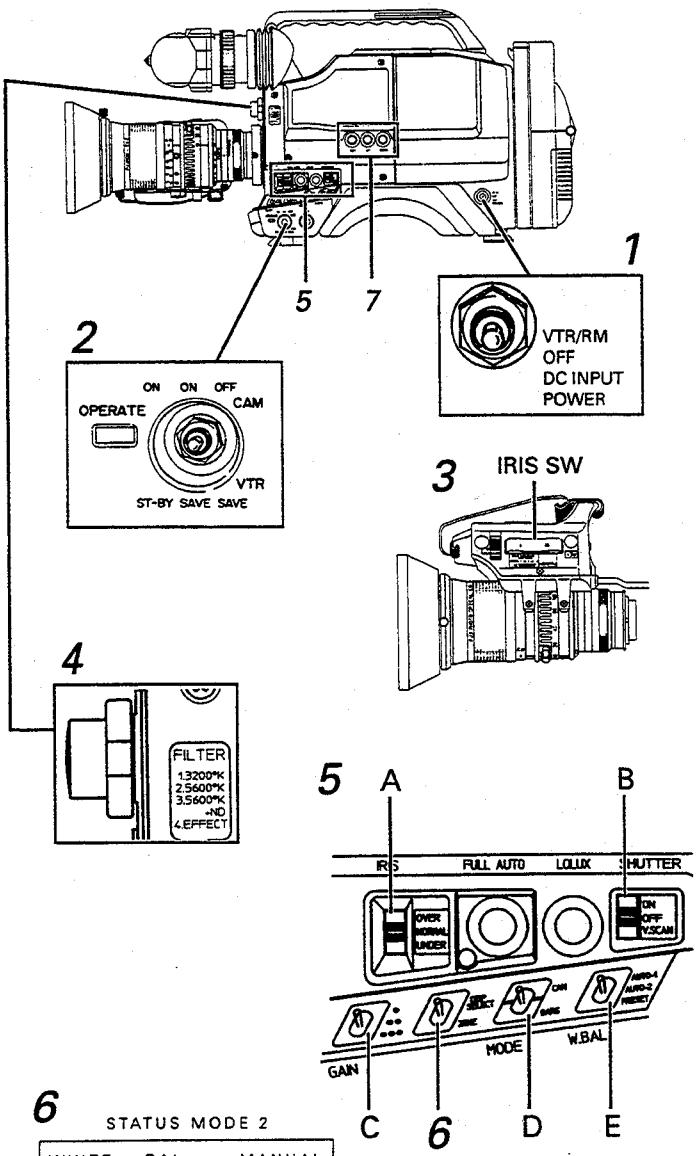


6

STATUS MODE 2

| | | |
|---|---|---|
| WHITE | BAL | MANUAL |
| FILTER | | 3.2 K |
| SHUTTER | | NORMAL |
| GAIN | | 0 d B |
| IRIS | LEVEL | NORMAL |
| IRIS | DETECT | NORMAL |
| AUTO | SHOOT | ON |
| REC | TIME | ACCUM |

CAMERA SET UP

| | |
|---|---|
| CONTOUR | NORMAL |
| M BLACK | MALNOR |
| IRIS DETECT | NORMAL |
| GAIN | 0 : 9 : 18 |
| AW2 | AUTO |
| ZONE MODE | STD |
| REC TIME | ACCUM 200 |
| LENS TRIG | NON LOCK |

7

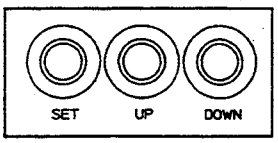

# 3.2

## 8 RIGHT SIDE SWITCH POSITIONS

A. Return Video switch set to Off.
WARNING:
IF RETURN SWITCH IS ON, STATUS DISPLAYS ARE NOT VISIBLE WHILE VTR IS IN RECORD OR RECORD/PAUSE.
Activating Set-up and Function changes override Return Video. The viewfinder will switch back to camera video.

B. Camera microphone audio channel designation.
1. Set switch to STEREO for different audio to be recorded on Channel 1 and 2 with a docked VTR. A Mono microphone records on channel 1 (Left) only.
2. Set switch to MONO for identical audio to be recorded on Channel 1 and 2 with a docked VTR.
3. Portable VTRs only receive the left channel of a Stereo camera microphone, so the MONO position is advisable.

## 9 KA-27 SWITCH SETTINGS

A. This chart shows the **KA-27 Adapter settings** for various portable VTRs.
RGB signals are not output in VTR mode.

* AG-7400 will record B/W with out setting switch #44 to Y/C.
** Set the cameras operate switch to ON/ST-BY to start recording. If Set to ON/SAVE or OFF/SAVE the VTR will not start recording, unlike other 3/4" VTRs.

B. Set the **CAM/AD switch.**

CAM: If the camera microphone input is used.
AD: If the KA-27 Adapter microphone input is used.

C. Set the **VTR/RM switch**

VTR: For VTR
RM: For remote control unit.

NOTE: When S-VHS portable VTR is connected, it is recommendad to use –20dB audio output on camera and –20dB input level ("H" position) on VTR.

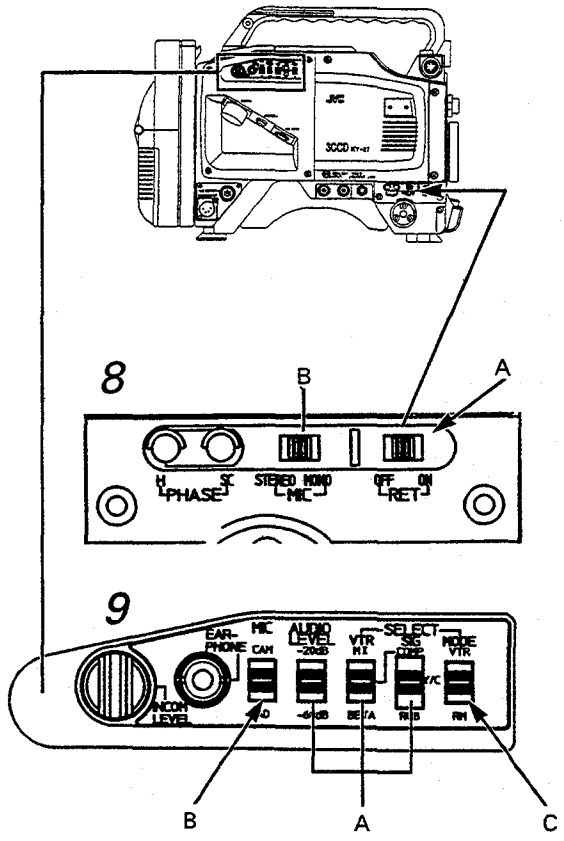


| TYPE | 1 | 2 | 3 | 4 |
|---|---|---|---|---|
| VTR TYPE | PRO-SVHS<br>Hi8 3/4"<br>VHS | MII | BETACAM[R] | VHS |
| | BR-S411<br>BR-S405<br>AG-7400*<br>EVV-9000<br>VO-8800<br>BVU-150<br>CR-4900L**<br>AG-6400 | KR-M460 | BVW-35<br>BVW-50 | BR-6200<br>BR-1600 |
| SWITCH | | | | |
| AUDIO OUTPUT LEVEL -20/-60dB | MATCH VTR | MATCH VTR | MATCH VTR | -20dB ONLY |
| SELECT VTR COMPO-NENT | — | MII | BETA | — |
| SELECT SIGNAL | Y/C | COMPO-NENT | COMPO-NENT | — |
| TRIGGER | — | — | — | Internal Switch |

## 3.2.2 VIEWFINDER ADJUSTMENT

Adjust the viewfinder to the operator's eyesight and shoulder position for the best comfort.

Next adjust the brightness and contrast for the viewing conditions.

(See section 2.4.3.)

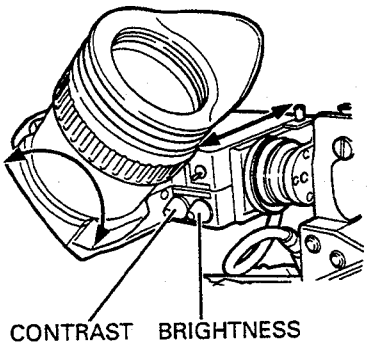


## 3.2.3 BACK FOCUS ADJUSTMENT

It is only necessary to perform this when focusing is not correct in both the Telephoto and Wide-angle positions, such as when the lens is attached for the first time.

Adjust the viewfinder for sharpness first.

It is easier to adjust back focus when the subject is more than 3 meters from the subject.

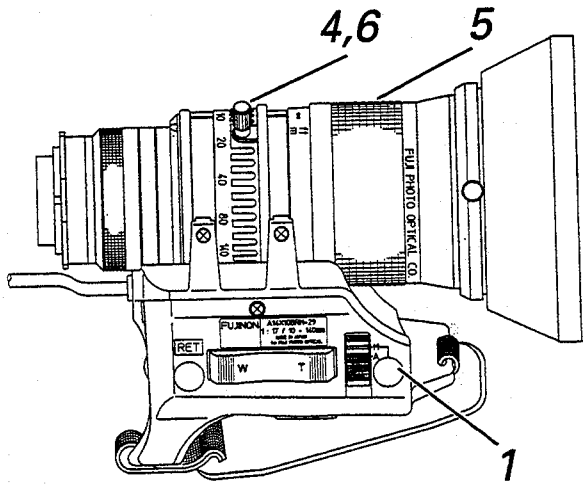


1. Set the Iris mode to M (Manual)
2. Set the Zoom mode to M (Manual)
3. Open the Iris ring to F1.4. If the illumination is to strong, reduce it or move to a darker place.
4. Turn the zoom lever until the lens it completely telephoto.
5. Focus on the subject. There is a specific chart that looks like a dart board which is helpful.
6. Set the lens to completely Wide-Angle.
7. Loosen the back focus ring retaining knob.
8. Adjust the back focus ring for the best possible focus.
9. Repeat steps 4 through 8 for fine adjustment.
10. Tighten the back focus ring retaining knob to secure the ring.

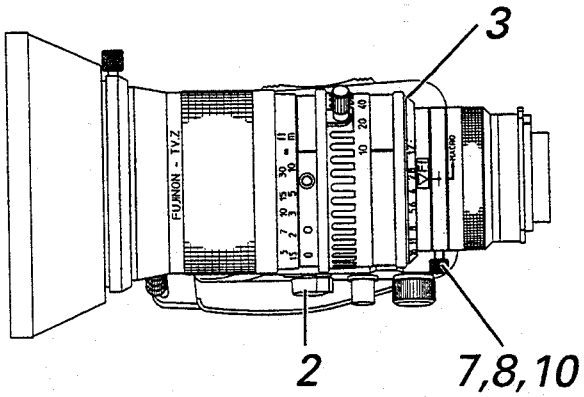


## 3.2.4 LENS OPERATION

### 1 FOCUSING

The lens is designed to have the best focus if you focus first in the Telephoto position and then frame your shot with the necessary Wider Zoom angle.

If the shot does not remain in focus see the previous section on Back Focus adjustment.

The lens is the sharpest in the middle Iris positions.

### 2 ZOOMING

Similar to focusing, if you adjust the camera position with the lens in Telephoto the subject will remain centered while changing zoom angles.

The Servo Zoom has different speeds. The more you push on the lever the faster the Zoom speed. A very slow rate is possible with a light touch.

Wide angle shots appear more stable when moving. Following a moving subject can also help with the appearance of stability.

Telephoto shots usually need a tripod for stability.

# 3.2

## 3.2.5 NORMAL AUTO WHITE/BLACK BALANCE

Adjust White Balance:
- When the type of light source changes before or during shooting.

Adjust Black Balance:
- When the unit is used for the first time each day.
- After a long period of storage.
- When ambient temperature has changed dramatically.
  The last Black and White balance settings are kept in memory even if the camera is turned off.

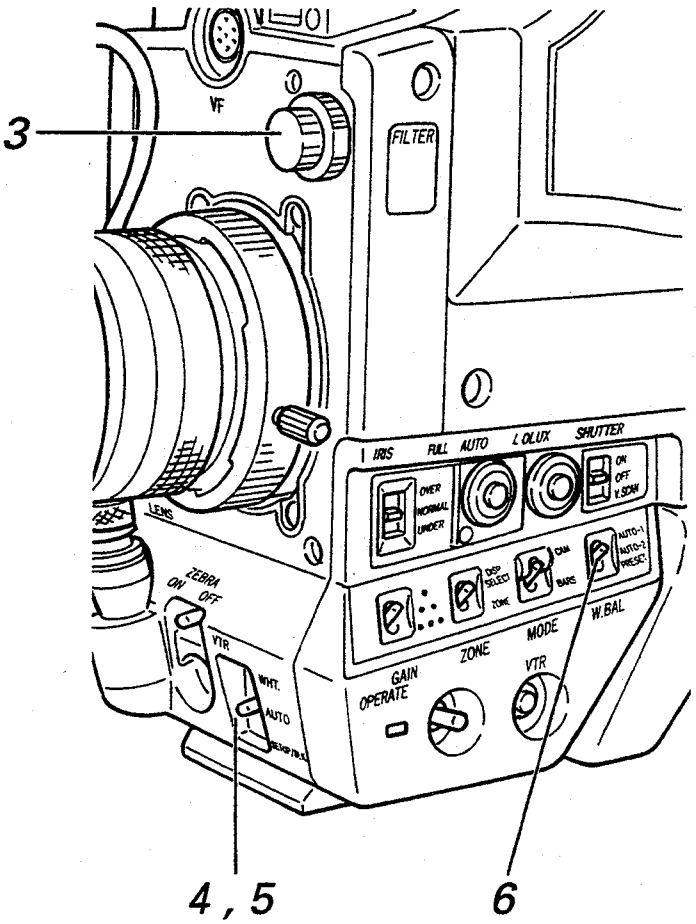


*1* Set the Iris to Automatic (AUTO) or Manual, depending on the subject.
(The Iris will be closed automatically during Black Balance).

*2* Fill the screen with a white object placed in the same position as the subject, and lit by the same primary lighting as the subject.

*3* If the FILTER turret has not been set for the current lighting color temperature, do so now. See section 4.2.

*4* For AUTO SETUP (both Black and White Balance) press the Auto switch in the down position momentarily.
If White balance is in Preset, Full Time Auto White (FAW) or Full Auto Shooting is selected, Black balance only will be performed.
Black Balance operation will be repeated after White Balance has been performed

*5* For White Balance only, push the switch in the up position momentarily.
During the process Auto Set Up, Black Balance or White balance "Operation" and "Completed" will show in the viewfinder.

*6* **FULL TIME AUTO WHITE**

FAW can be assigned to the Auto White Memory 2 switch #12 position in the Camera Set-Up mode.
The color temperatures in the video image will be continuously analyzed and the proper white balance provided.
See section 4.2 and 4.10 for details.

Function Failures:
WHITE BALANCE/BLACK BALANCE function

| | |
|---|---|
| AUTO WHITE 1, 2 OBJECT ERROR | Check whether the object being shot is white enough. Check the filter |
| AUTO WHITE 1, 2 LOW LIGHT ERROR | Check to see if increasing gain or lighting will help. |
| AUTO BLACK ERROR | Auto black has been interrupted. |
| AUTO BLACK LENS NOT CLOSED? | Check that Auto iris is on, or that the lens is not connected. |

## 3.2.6 ZEBRA PATTERN (VIDEO LEVELS)

Pressing this switch #20 turns on or off the Zebra stripe pattern in areas of highlights between 80 to 90 percent brightness.

If you cannot achieve a Zebra pattern by changing the Iris manually or Automatically in areas brighter than a subjects face, or in highlights in general, you should consider adjusting for greater gain.

If dark areas contain zebra patterns you should consider adjusting for a higher shutter speed or using the Neutral Density filter.

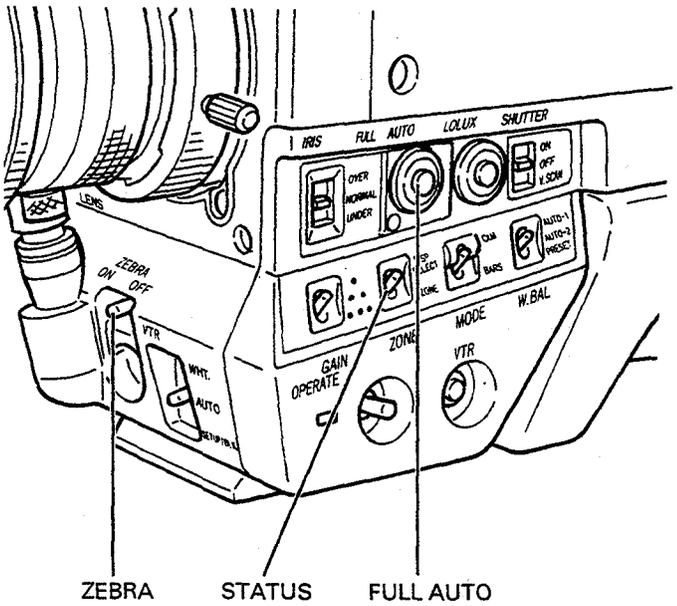


## 3.2.7 CHECK AUDIO

Make sure that audio is reaching the tape machine.

Listen through an earphone connected to the jack on the KA-27 adapter or the VTR. Check for the quality of the signal, the level, and the connections.

With Docked VTRs the audio levels can be monitored in the viewfinder in the Status mode 1.

The Audio level display is available only from dockable VTRs.

VTRs without return audio or portable VTRs will not give an audio level display.

The viewfinder 0 dB level must be set to match the VTR meter 0 dB audio level.

This is done with the VTR monitor level adjustor.

Otherwise the viewfinder display will not be accurate.

Readings in dB:

| -18 | -12 | -6 | -3 | 0 | +3 | +6 |
|---|---|---|---|---|---|---|

## 3.2.8 FULL AUTO SHOOTING OPERATION

The Full Auto Shooting function allows the camera operator to go ahead and shoot immediately with no manual camera adjustment.

To record with this mode just activate the Full Auto Shooting switch #6, Zoom, Focus and Push the Trigger.

The camera is now ready to enter this mode with good results.

The Full Auto Shooting uses Enhanced ALC; Variable Shutter Speed (EEI) with Variable Gain (ALC). The Auto Iris is automatically activated even with the switch in manual to achieve good exposures over a wide range of lightning.

The Full Time Auto White function will keep White Balance correct under most conditions.

# 3.2

## 3.2.9 MOUNT CAMERA ON TRIPOD

The KA-510 TRIPOD BASE included with the camera must be used to secure the camera to a tripod or camera stand.

### 1 TRIPOD MOUNTING HOLES

Match A 3/8 or 1/4 inch Tripod Mounting Screw to the best hole for good balance.

### 2 TRIPOD MOUNT RELEASE

Pull back once to activate the front clip before mounting the camera.

Hold the camera, push the safety lever and pull this release lever to open the Base and release the camera.

### 3 SAFETY LEVER

Prevents accidental release. If the camera is secured in the Base, this release lever must be pushed in order to pull the release lever and open the Base.

### 4 REAR MOUNTING PIN

Make sure the rear mounting clip of the camera is firmly on the Tripod Base, so that the Rear Mounting pin can be engated properly.

Slide the camera forward and down until the front mounting clip of the Base engages the front Mounting Wedge on the camera automatically with a click.

### 5 FRONT MOUNTING CLIP

Making sure the Rear Mounting Pin engages, Slide the front Mounting Wedge on the camera into the front Mounting Clip of the Base until it engages automatically with a click.

The front clip will hold the camera safely, but without engaging the rear clip, the camera will tend to move slightly in the Base.

DO NOT REMOVE YOUR HAND FROM THE CAMERA UNTIL YOU ARE SURE IT IS SECURE.

### 6 MOUNTING ERROR

Double check that the rear pin is engaged properly.

The front clip will hold the camera safely, but without engaging the rear clip, the camera will tend to move slightly in the Base.

1

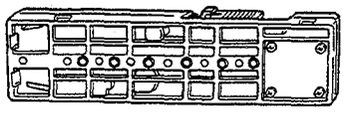

2, 3

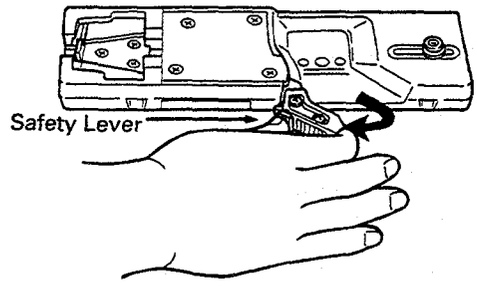


4

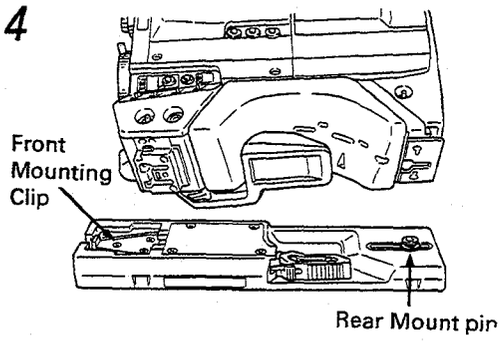


5

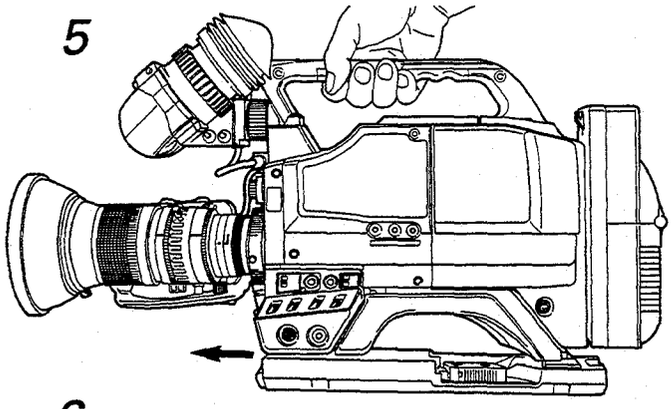

6

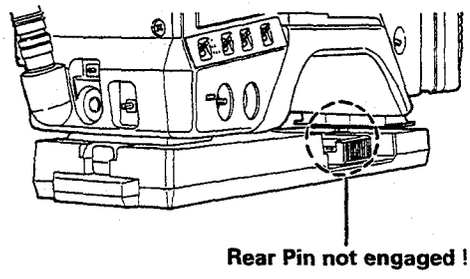


## 3.2.10 STARTING THE VTR

It is now time to start the VTR. See sections 5.1 and 5.2 for Docked and Portable VTR use.

# TROUBLESHOOTING 3.3

## 1) WHITE BALANCE/SET UP/BLACK BALANCE PROBLEMS

### VIEWFINDER DISPLAYED ERRORS

| | |
|---|---|
| AUTO WHITE 1, 2 OBJECT ERROR | ● Check whether the white balance object being shot is white enough.<br>● Check that the Filter Turret is correctly set for the lighting conditions. |
| AUTO WHITE 1, 2 LOW LIGHT ERROR | Check to see if increasing gain or lighting will help. |
| AUTO BLACK ERROR | Auto black has been interrupted. |
| AUTO BLACK LENS NOT CLOSED? | Check that Auto iris is on, or that the lens is not connected |

### OTHER PROBLEMS:

### COLORS ARE NOT CORRECT IN FULL TIME AUTO WHITE

- Check the overall color balance. **If one solid color predominates this can cause an error.**
- White balance may shift perceptably when the gain is increased or decreased. Try to white balance in the mode that you expect to shoot.

## 2) VTR ERRORS

**VIEWFINDER DISPLAY:** VTR OP MISS?
VTR OPERATION MISSED.

- The Docked JVC SVHS VTR has not been placed in Record/Pause mode. Press the Record and Play buttons to activate Record/Pause.
- The Camera/VTR switch #2 is in ON/SAVE. The Save function stops head rotation and turns off the power to the circuitry in JVC Professional SVHS decks.
- Check the Operate switch on SVHS Dockable VTRs. This activates the SAVE function.
- A regular VHS cassette has been inserted in the SVHS mode. Change the mode on the VTR.
- The Stop button on the VTR may have been pressed instead of the Camera VTR Trigger.
- Check for missconnection.

### OTHER VTR PROBLEMS:

### NO RECORDING

- NO RECORDING may be due to a cassette with a safety tab removed.
- Do not trigger the VTR from the ON/SAVE mode. The professional SVHS VTR will display the "VTR OP miss?" error display. It is better NOT to trigger other VTRs from the ON/SAVE mode because the record light and other status messages may display wrong information. A Hi8 VTR, for example, does not have a save mode.
- After setting the VTR to save using the camera operate switch. Do not manually use the VTR operate switch to put the VTR back stand-by mode.
  It is possible that the VTR will not go into "REC" mode, even though the trigger is pushed and display "REC" on the viewfinder.
- If the VTR does not start Check the lens trigger setting in camera set up.

### POWER PROBLEMS

- Low capacity power unit can cause some VTRs to shut off. Use specified power unit.
- Ejecting a tape may not occur until after a limited period of time from turning the power on.
- If you switch the power off within one second after the cassette holder is opened, it may not be closed fully.
- The cassette cannot be ejected if the power supply is too low.

### BAD PICTURE FROM VTR

- Still pictures or pictures in search may vibrate vertically, have noise or become monochrome.
  This is normal
- Under severe vibration the VTR may not record or play back.
- When recording in the VHS mode on a SVHS tape previously recorded in the SVHS mode, Searching or editing the S-VHS recordings is not possible.
- No audio is available in search mode

### ACCUMULATED RECORD TIME

Is approximate only. There may be a slight ifference because of the time for the VTR to enter record mode.

## 3) VIEWFINDER SCREEN DIM OR DARK

- Check the viewfinder contrast and brightness controls.
- Check if the filter turret is set to 5600 +ND.
- Check if the Iris is shut.
- Check if the Shutter speed is set too high.
- Check the viewfinder cable

## 4) FOCUSING IS NOT THE SAME IN TELE OR WIDE

- First check that the lens is solidly seated
- Then perform backfocus adjustment

## 5) GENLOCK IS NOT POSSIBLE WITH A VTR PLAYBACK

This is not possible unless a Time Base corrector is used.

## 6) HIGHER LEVELS OF GAIN WILL GIVE GREATER NOISE IN THE PICTURE

FAS, and ALC can increase the noise as the gain is increased.

## 7) PICTURE IS FLICKERING

Some lighting conditions may cause a flicker.
50 hertz power will cause a flicker for NTSC.

# 3.3

- For NTSC try adjusting to 1/100 shutter speed.
- Try Variable Scan to reduce flicker.

## 8) AUDIO CHANNELS NOT WORKING

Audio can only be recorded from the camera mic in stereo on a stereo Docked deck.

In the stereo position a mono microphone will record on the left channel only.

## 9) AUTO IRIS IS NOT STABLE

- The lens iris adjust speed may be set to high or low.
  The lens supplied from the JVC factory is set correctly for the iris servo system. The adjustment is behind the small port marked S on the front of the servo/lens grip, and should be performed by an authorized JVC service representative.
- Similarly, the Dynamic Shading function is adjusted to compensate for the lens supplied with the camera. An authorized JVC service representative can reset this function.
- If Enhanced ALC is used in the Manual Iris mode for Aperture Priority, the response time of the Automatic level control may not be as fast as when the Enhanced ALC is used in with the Automatic Iris.
- The range of the Manual Aperture Priority is the equivalent of 5 Fstops, while the automatic Iris Enhanced ALC mode has a range the equivalent of 11 Fstops. This should be considered when shooting in a high contrast environment.

## 10) CCU TROUBLESHOOTING

**Video Problems**

Poor color reproduction:
Is the SC Phase control adjusted correctly?

The Monitor Does not synchronize:
Is the mode switch on the KA-27 Camera adapter set to RM?
Is a reference video signal being sent to the Genlock input connector?
Is a VTR signal being used for a reference?
Is the reference signal a proper composite video or black burst signal? Computer signals will not genlock.

**Control problems**

Tally Light is not working:
Is power supplied to the tally input terminal?
Is the internal trigger type switch in the correct position?

Intercom communication is not working:
Is the impedance of the headset appropriate? (headphone 200–600 Ohms)
Is the KA-27 mode switch set to RM?

The auto set-up indicator does not light:
Is the color temperature filter correct?
Is the subject being shot the a solid color?
Are all the cables connected correctly?

## 11) FUNCTION PRIORITIES

**LOLUX ON**

LOLUX function has priority over Gain, but Full Auto Shooting will lose only the Variable shutter and Variable Gain functions. Settings will default to the last value and switch position of the shutter switch, including Variable Scan.

FULL AUTO SHOOTING
Full Auto shoot has priority over Gain, Shutter, Variable Scan, White Balance.

SHUTTER ALC
Automatic Level Control has priority over Shutter, and Variable scan.

IRIS OVER/UNDER
Is Totally independent of LOLUX or FULL AUTO SHOOTING.

FULL TIME AUTO WHITE
Full Time Auto White has priority over White Balance.
Full Auto Shoot also engages Full Time Auto White and has priority.

WHITE BAL PRESET
Preset mode has priority over White Balance.

WHITE BALANCE / AUTO SET UP
Has priority over STATUS displays, and RETURN video.

ST-BY
Standby is displayed in STATUS MODE 1 position whether or not a VTR is connected, or in the RECORD / PAUSE mode.
This reflects the OPERATE switch position only.
Pressing the VTR Trigger under these conditions will cause the display to show "VTR OP MISS?"

ACCUMULATED AND REMAINING RECORD TIME
are not displayed in play back mode.

**WARNING PRIORITY:**

When two malfunctions occur at the same time this order determines the display.

| | |
|---|---|
| VTR OP MISS? | Message only<br>This will always be visible in addition to other warnings (Only docked S-VHS VTRs) |
| Priority 1.<br>VTR WARNING | Green light blinks<br>Some VTRs do not return signals to camera |
| Priority 2.<br>TAPE NEAR END | Green light blinks<br>Only docking Betacam,MII |
| Priority 3.<br>LOW BATTERY | Red or Green light blinks |

## 12) SYSTEM RESET

SEE SECTION 4.10.10 PAGE 59 TO RESET ALL CAMERA SETUP AND FUNCTION CONDITIONS TO THE DEFAULT SETTINGS.

# ADVANCED OPERATION 4

## SELECTING FUNCTIONS FOR DIFFERENT SHOOTING CONDITIONS 4.1

This simple chart lays out conditions and functions to use for them.

| | CONDITION | FUNCTION |
|---|---|---|
| 1 | A sudden event, no time to set up. | Full Auto Shooting |
| 2 | Changing light color balance. | White Balance, Filters |
| 3 | Moving between predictable complex lighting environments. | White Balance Memories |
| 4 | Light color balance will change unexpectedly while moving, or over time. | Full Time Auto White |
| 5 | A bright daylight environment, Lens is always at F16 or high shutter speeds are being used by Enhanced ALC. Less depth of field is preferred. | Use #3 filter 5600K + ND. This will lower the Fstop range by four Fstops. |
| 6 | The subject matter has bright lights or shiny surfaces in the background. The subject is under exposed. | Average Iris Detect mode<br>Iris Override, Over mode |
| 7 | The subject matter is brightly or evenly lit, with important detail in the highlights. | Peak Iris Detect mode<br>Iris Override, Under mode |
| 8 | The subject is moving between differing contrast environments. There will be no time to adjust camera. | Auto Peak/Average Balance Iris Detect mode |
| 9 | A bright light close to the subject. | Iris Override, Under mode |
| 10 | The subject is surrounded by darkness. | Iris Override, Over mode |
| 11 | A bright light in the edge of the scene. | No special setting, Multizone Iris Weighting will compensate. |
| 12 | Night or Emergency shooting conditions. | LOLUX |
| 13 | A fixed depth of field is needed. | Aperture priority |
| 14 | Fluorescent lights flicker. | 1/100 shutter speed (U version)<br>1/120 shutter speed (E version) |
| 15 | High speed objects that need to be played back in slow motion and seen sharply. | Shutter priority |
| 16 | Computer monitor has flicker bars or data flickers. | Variable Scan |
| 17 | High speed objects are flickering, or need to be isolated or frozen in motion. | Special High Shutter Speeds<br>(Variable Scan Mode) |
| 18 | The camera will be sending RGB output. | RM-P200 or RM-P300 CCU is needed |
| 19 | The subject has very low or high contrast.<br>The Camera must match a different video source. | Adjust the Master Black level<br>(Check image on monitor first) |
| 20 | The Subject has too little or too much detail, low or high contrast. | Adjust Contour (detail)<br>(Check image on monitor first) |

# 4.2 WHITE BALANCE ADJUSTMENT

## 4.2.1 SUMMARY DISCUSSION AND COLOR TEMPERATURE

White balance is necessary because there are many different colors and combinations of colors to be encountered in lighting.

Video white balance is very precise, and can correct for some difficult conditions such as fluorescent lighting or underwater shooting that are very hard to adjust for by filters alone.

It is very important to pay attention to the basic source of the light.

A good example of a tough situation is theater lighting, where many combinations of colored lights are used, and incandescent lights are the basic source.

The incandescent lights change color when they are bright or dim, and spot lights often are a completely different color temperature than the basic lighting.

This is often the case in the real world as well, where outdoor light from a window is often mixed with Incandescent and Fluorescent, all of which have extremely different fundamental color make-ups.

The best strategy is to make one color or type of light dominant. This simplifies the task of mixing colors and often if the subject is correctly colored the background color distortion is not as objectionable.

This can be done as simply as paying attention to positioning the subject so that one lighting source is strongest.

It is very important to keep track of the strategies used in order to maintain continuity in a scene. It is often very difficult to compensate later for an error in technique or lack of control.

## 4.2.2 WHITE BALANCE FEATURES

There are some basic tools this camera has to take care of white balance:

### 1 Automatic White Balance

If it is possible the white balance should be adjusted frequently with the same target placed as close as possible to the subject.

### 2 Automatic White Balance Memories

The two White Balance Memories can be used to pre establish a good white balance and then rapidly switch between them while shooting.

### 3 Full time Automatic White Balance

This function detects large changes in the Red and Blue fundamental colors in the image and then compensates to give the appropriate white balance, with proper skin colors as a control.

The color signal is divided up by the camera into three signals; Green for Intensity, Green minus Blue, and Green minus Red. This is one form of component color system.

There is a general principle that differing color temperatures change nearly along an axis running between the Yellow/Orange region and the Blue region.

The G-B and G-R values are then kept close to the 0 value, away from areas that are too Blue or too Yellow/Orange.

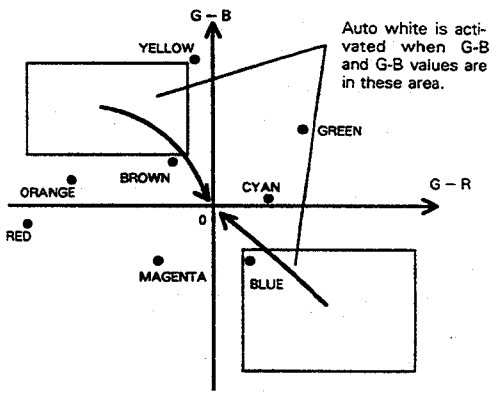


This mode is very good when there is no time to take new white balance settings and the camera is constantly moving in and out of different lighting environments.

However if a field of view tends toward a single color this technique can be misled, such as when an off-white room is encountered. There are many different colors for off-white.

It is best to test this use before hand.

### 4 Preset White Balance

The factory preset white balance is 3200 degrees Kelvin. This is the temperature of normal incandescent lighting. It is also the color temperature of outdoor light just before sunset. It is close enough to most indoor lighting colors that if other methods are not possible it can get a descent result.

## 5 Internal Filter Choice

#1. The #1 position is a clear filter that gives the most sensitivity to low lit situations with incandescent lighting.

#2. In the #2 position the factory preset neutral condition is then modified by an "orange". appearing filter that compensates for the "blue" outdoor light. This is the 5600 degrees kelvin setting for the filter turret.

If there is trouble getting a good balance outdoors, using the Preset 3200 k setting with a 5600 K degree filter can provide a dependable white balance.

However lighting outdoors changes hour by hour so care should be taken with this practice.

#3. The #3 position is admits 1/16th of the light to the CCD. This is very useful for extremely bright conditions such as on beaches or in snow. This filter is set at 5600 K primarily for use with outdoor scenes. The depth of field of outdoor scenes is reduced as well.

#4. The #4 position is a 4 way Cross Filter that gives a cross shine to highlights. Experiment with this to give added feeling to a scene.

This filter is set for 3200 K. If the White Balance or Full Auto White function is not accurate enough in the day light you should use an "outdoor light" external filter mounted on the lens filter to help the white balance adjust for 5600 K color temperatures.

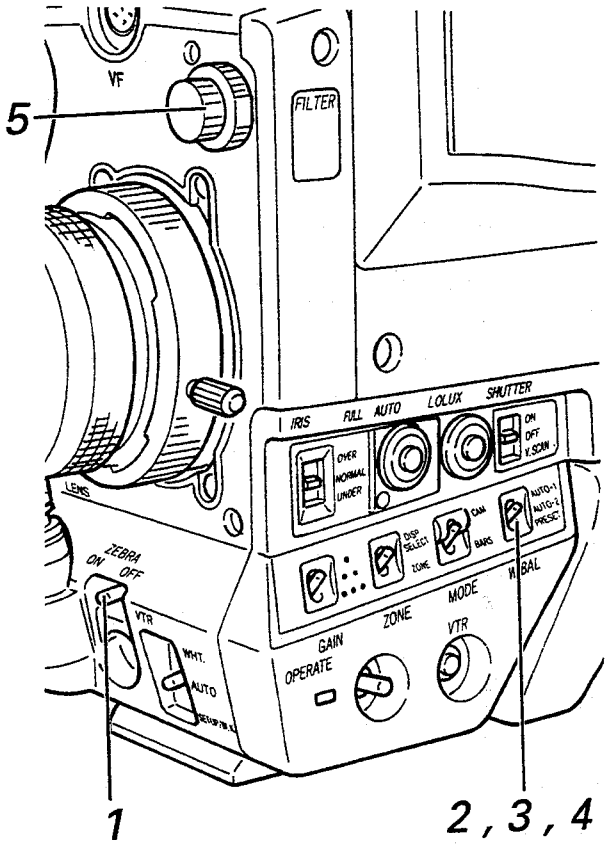


## 6 External Lens Filter use

When possible it can be very rewarding to experiment with filters mounted on the front of the lens. There are many photographic filters designed for very specific lighting conditions and special effects.

A UV FILTER tends to reduce haziness from water suspended in the air. It also protects the lens with no visible picture distortion.

A SKY LIGHT FILTER tends to warm up faces and keep backgrounds from becoming too blue. This also protects the lens with no visible picture distortion.

A POLARIZER FILTER can dramatically reduce reflected light and highlights from reflections. The contrast of the sky can be increased, and shine on tree leaves can be reduced. Water and glass can be made transparent. (However this filters effect depends on the rotation of the lens and the angle with the sun)

NEUTRAL DENSITY FILTERS can help to preserve depth of field by reducing the amount of light. The ND filter of this camera is tied to the 5600 K outdoor color temperature.

#85 OUTDOOR FILTER This filter is designed to adjust the outdoor color temperature to match devices and film designed for 3200 K incandescent lighting.

| NO. | Color temperature | Shooting condition |
|---|---|---|
| 1 | 3200 K | Studio/Nightime |
| 2 | 5600K | Cloudy weather / Outdoors in rain / Indoor with fluorescent lamp |
| 3 | 5600K+1/16ND | Outdoors in daytime |
| 4 | EFFECT | Cross |

TYPICAL LENSES AND FILTER SIZES

| | |
|---|---|
| Fujinon | |
| A13x10 | 72mm |
| A14x10 | 77mm |
| A14x8.5 | 77mm |
| A16x9.5 | 77mm |
| Canon | |
| J13ax9B | 77mm |
| J14x8B | 105mm |
| J15x9.5 | 82mm |
| J18x8.5B | 105mm |
| Nikon | |
| S13x9B | 72mm |
| S15x8.5 | 82mm |
| S19x8 | 94mm |

# 4.2

## 4.2.3 BASIC OPERATION:

**Adjust White Balance:**
When the type of light source changes before or during shooting.

**Adjust Black Balance:**
When the unit is used for the first time each day.
After a long period of storage.
When ambient temperature has changed dramatically.

The last Black and White balance settings are kept in memory even if the camera is turned off.

White balance will not occur during these modes:

- Full Auto Shooting
- Full Time Auto White
- White Balance Preset

**STEPS:**

1 Set the Iris to Automatic (AUTO) or Manual, depending on the subject.
(The Iris will be closed automatically during Black Balance).

2 Fill the screen with a white or grey object placed in the same position as the subject, and lit by the same primary lighting as the subject.

For example in very mixed lighting the target should be perpendicular to the lens.
When there is a very strong point source of light angle the target toward that light source.
When there is a very broad source of light, angle the target toward the surroundings, as the reflected light contributes to the subject lighting also.

3 If the FILTER turret has not been set for the current lighting color temperature, do so now.

At night there are many different artificial light sources. Experiment taking white balances under the 3200 and 5600 K settings and then switching the filter to see which gives the best impression.

But if the subject is a person try to white balance in a traditional fashion unless an effect is desired.

By white balancing in the 5600 K mode and shooting in 3200 K you can give a scene a warm feeling.

By white balancing in the 3200 K mode and shooting in 5600 K you can give the scene a colder bluer feeling.

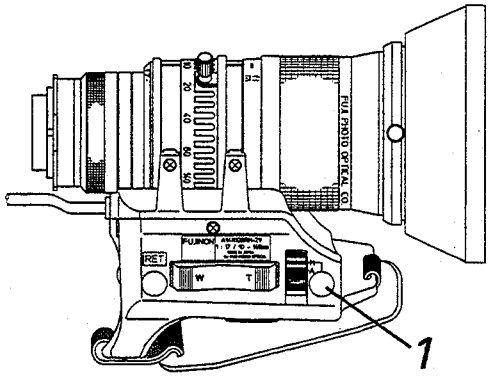


2

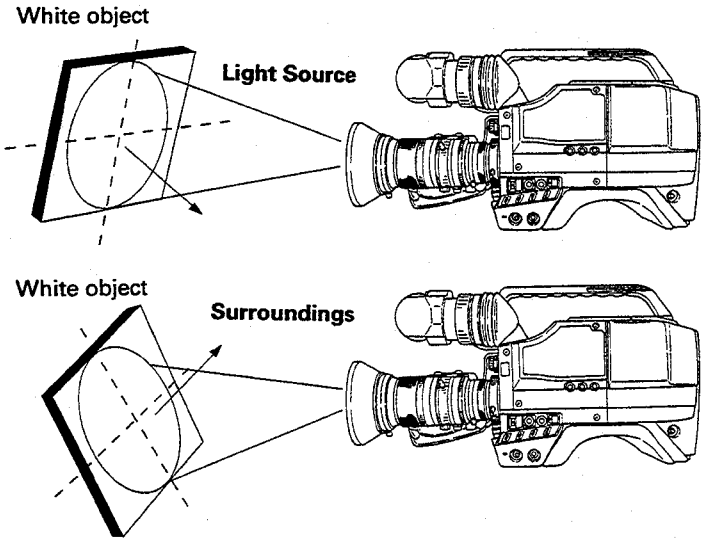


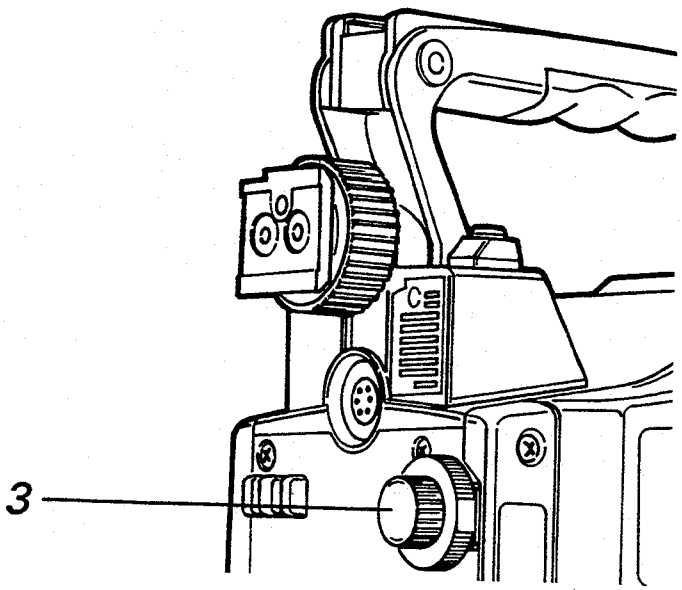

**4** For AUTO SETUP (both Black and White Balance) press the Auto switch in the down position momentarily.

If White balance is in Preset, Full Time Auto White or Full Time Auto shooting is selected, Black balance only will be performed.

Black Balance operation will be repeated after White Balance has been performed.

**5** For White Balance only, push the switch in the up position momentarily.

The White Balance will be stored in either AUTOMATIC WHITE BALANCE MEMORY 1 or 2 depending on the current setting of the W. BAL memory switch.

- During the process Auto Set Up, Black Balance or White balance "Operation" and "Completed" will show in the viewfinder.

**6** FULL TIME AUTO WHITE can be assigned to the Auto White Memory 2 switch position in the Camera Set-Up mode. The color temperatures in the video image will be continuously analyzed and the proper white balance provided. See section 4.10 for camera set-up.

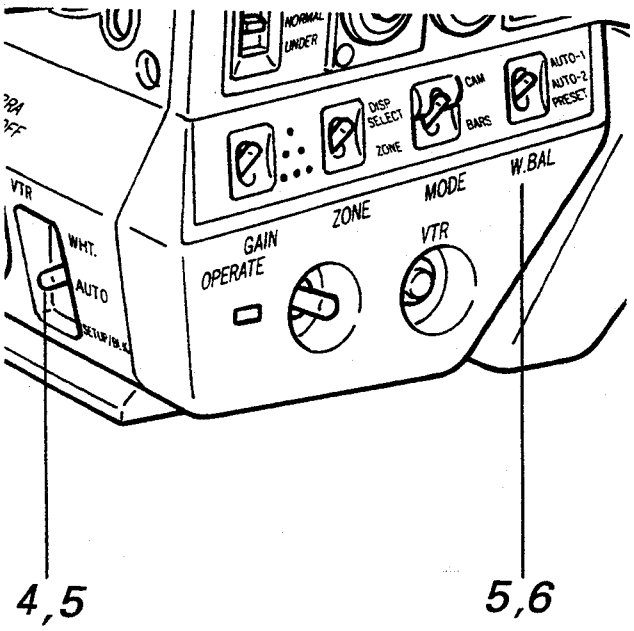


## 4.2.4 ERROR MESSAGES

These messages will indicate failure to perform white or black balance.

| | |
|---|---|
| AUTO WHITE 1, 2 OBJECT ERROR | Check whether the object being shot is white enough. Check the filter |
| AUTO WHITE 1, 2 LOW LIGHT ERROR | Check to see if increasing gain or lighting will help. |
| AUTO BLACK ERROR | Auto black has been interrupted. |
| AUTO BLACK LENS NOT CLOSED? | Check that Auto iris is on, or that the lens is not connected |

AUTO WHITE
OBJECT ERROR

# 4.3 ELECTRONIC SHUTTER PRIORITY

The normal operation of this camera assumes a shutter priority mode, where the aperture and possibly gain are used to adjust for different lighting levels.

The basic shutter speed is 1/60 of a second for NTSC (U version), 1/50 of a second for PAL (E version).

This is the center or normal/off position of the SHUTTER switch.

Higher shutter speeds are obtained by shortening the period that the chip collects and saves signals from light within the normal 1/60th of a second video field duration.

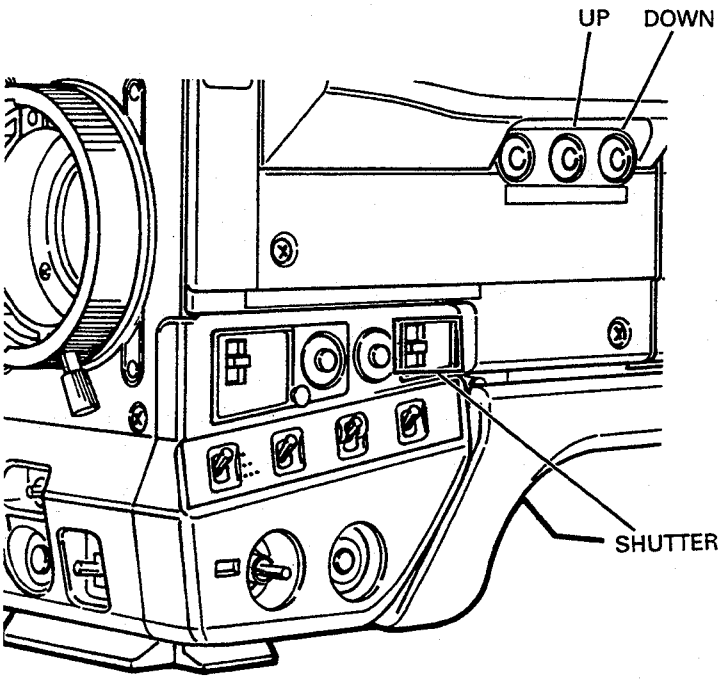


## 4.3.2 BASIC OPERATION

**OFF:**

This mode corresponds to the standard 1/60 NTSC setting.

**SHUTTER:**

This mode allows setting of different Shutter speeds.

To change shutter speed push the UP or DOWN SET Button after placing the SHUTTER switch in the up and ON position.

The range of shutter speeds cycles between:

1/100 (U version), 1/250, 1/500, 1/1000, 1/2000
1/120 (E version)

To change the shutter speed again, press the UP or DOWN buttons again to activate the display, and a second time to change the speed.

## 4.3.3 WHEN TO USE

A shutter speed of 1/60th second (U version), 1/50th second (E version) is too slow to prevent blurring from normal actions when as subject is moving.
This gives a smooth and natural effect when watching motion normally, but in certain applications the video is to be displayed in slow motion or as a freeze. The blurring in this case reduces the possible sharpness of the image.

As one increases the shutter speed the amount of light collected is less and less, so consideration should be given to the effects of opening the iris and increasing gain.

Opening the iris reduces depth of field and causes foreground and background objects to go out of focus. This is a useful artistic technique.

But increasing gain also increases video noise, so care should be given to the quality of the image needed.

# VARIABLE-SCAN 4.4

## 4.4.1 SUMMARY

This mode helps adjust the shutter speed to match the scan rate of a display or computer monitor.

The mismatch of scan rate to shutter speed causes a light horizontal over-exposure bar in the monitor if the computer refreshes the screen faster than the camera shutter speed.

If the scan rate of the computer screen is slower than the camera shutter speed there will be a dark under exposure bar in the monitor.

The monitor scan rate frequency can change for many reasons while running the computer, so try to watch a planned sequence in the viewfinder to make sure the rate is stable during the shot.

The scanning frequencies may change because of:

- Different Software
- Software changing mode during operation
- Different brand or model of computer or monitor running the same software
- Different brand or model of display card with the same type of computer or monitor

Moniter Screen

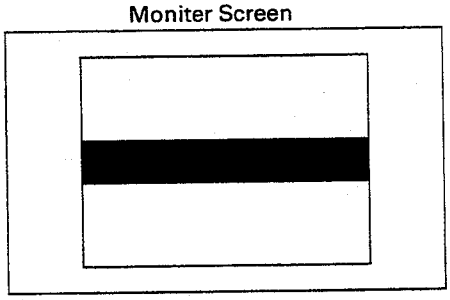

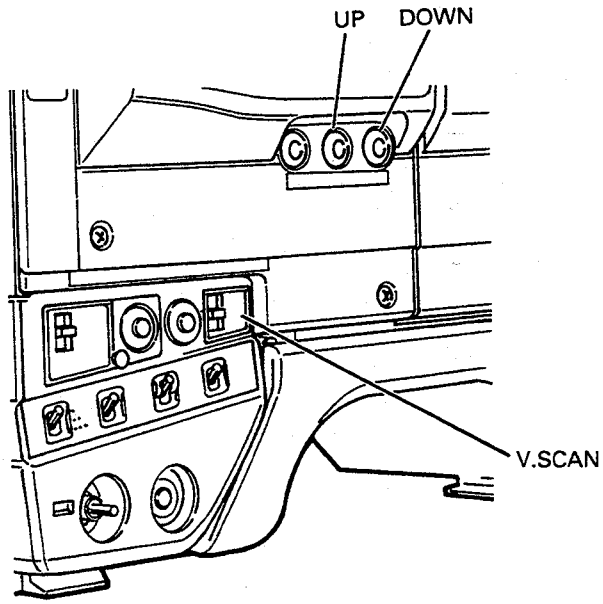


## 4.4.2 BASIC OPERATION

Place the SHUTTER switch down in the V.SCAN position and then use the UP or DOWN SET Buttons to adjust the speed.

In U version, there are 256 increments starting with 1/60.2 to 1/1966.7 and there are 305 increments starting with 1/50.0 to 1/1953.1.

The effect will be to shrink the dark or light horizontal flicker bar. When the bar is the thinnest is the best setting.

To change Variable-Scan speed again, press the UP or DOWN buttons again to activate the display, and a second time to change the speed.

## 4.4.3 RANGE OF FREQUENCIES COVERED

Variable Scan is designed to cover a combined scanning frequency range from 60.2 Hz to 1966.7 Hz. (U version), from 50.0 Hz to 1953.1 Hz (E version).

IBM "CGA" standard displays are near the lower limit for modern computer monitors at 15.75 kHz Horizontal scanning frequency and a 60 Hz Vertical Scanning frequency, similar to NTSC.

NTSC(U) versions of the camera will not be able to access computer monitor rates as low as some 50 Hz Vertical frequency monitors.

The best thing is to experiment under the guideline that a light flicker bar means the shutter speed is too low and a dark flicker bar means the shutter speed is too high.

# 4.4

Some computer monitors have longer Phosphor decay times. This tends to reduce the flicker effect, so test first.

For NTSC cameras (U version)
Steps 1-100 are between 1/60.2 and 1/96.5
Steps 101-200 are between 1/97.1 and 1/245.8
Steps 201-256 are between 1/249.7 and 1/1966.7

Most computer monitors should fall within the first 100 steps.

For PAL cameras (E version)
Steps 1-100 are between 1/50.0 and 73.3
Steps 101-200 are between 1/73.7 and 1/138.2
Steps 201-305 are between 1/139.5 and 1/1953.1

Most computer monitors should fall within the first 100 steps.

## 4.4.4 This chart is for some popular computers

This chart, compiled in part from the Inline Corporation "Computer Video Handbook" is for some popular computer monitor and card combinations.

There are many, many more different frequencies and the best bet is to develop your own records of what setting works best.

## 4.4.5 SPECIAL APPLICATION HIGH SHUTTER SPEEDS

The 155 Shutter speed Steps 101 to 256 are from 1/97.1 to 1/1966.7.(NTSC, U version)

The 205 Shutter speed Steps 101 to 305 are from 1/73.7 to 1/1953.1. (PAL, E version)

If you experience a bad flicker at high shutter speeds in lighting or other repetitive images try adjusting the Variable scan mode.

| COMPANY | STANDARD | CAMERA | MONITOR | |
|---|---|---|---|---|
| | | V. SCAN | Fhor. kHz | Fvert. Hz |
| Television | PAL | | 15.625 | 50 |
| | SECAM | | | 50 |
| | NTSC | | 15.734 | 59.95 |
| IBM | CGA | 59.95 | 15.7 | 60(Shut.Nor.) |
| | MDA | | 18.1 | 60 |
| | EGA | 59.70 | 24.1 | 60 |
| | PGA | 60.06 | 30.5 | 60 |
| | VGA mode 1 | | 31.5 | 60 |
| | mode 2 | | 35.5 | 60 |
| | mode 3 | 70.086 | 35.5 | 70 |
| | XGA = VGA and mode 4 | | 50.0 | 80 |
| APPLE | AppleII | | 15.7 | 60(Shut.Nor.) |
| | Mac | | 22.2 | 60 |
| | MacSE | | 22.2 | 59.9 |
| | MacIISI,IICI,LC mode low | | 24.5 | 60 |
| | mode hi | 66.667 | 35.5 | 66.6 |
| | MacII,IIX | 66.667 | 35.5 | 66.6 |
| | Quadra | | 35.5 | 60 |
| COMMODORE | Amiga | | 15.7 | 60(Shut.Nor.) |
| VARIOUS WORK STATIONS | | | | |
| SILICON GRAPHICS | 4D/220 | | 64 | 60 |
| HEWLETT PACKARD | HP-340 | | 64.5 | 60 |
| IBM | 6091 | | 69 | 50 |
| DEC | VRT19 | | 70.7 | 66.5 |
| SUN MICRO SYSTEMS | model 2 | | 76 | |
| NCD | 16,16E | | 82.9 70 | 70 |

# GAIN 4.5

## 4.5.1 SUMMARY

The gain function boosts the signal from the CCD sensors.

The pyramid of dots stands for the different sensitivity levels. Two dots and Three dots can be changed in the Camera Set-Up menu (see section 4.10)

| | |
|---|---|
| One dot: | Always equals the 0dB gain up position |
| Two dots: | When Set up for either Enhanced ALC or +9dB, |
| Three dots: | Is Set UP for +18dB. |
| Two dots: | When Set up for +6dB |
| Three dots: | Can be Set Up for either Enhanced ALC, +9dB, and +12dB. |

**GAIN chart**

| | | | | | |
|---|---|---|---|---|---|
| • | 0dB* | | | | |
| •• | ALC (0 - 18 dB) | 9dB* | 6dB | | |
| ••• | 18dB* | | ALC (0-18dB) | 9dB | 12dB |

* Factory Setting

## 4.5.2 Operation

Simply switch between the different settings.

If it is not possible to get a Zebra video level reading in areas brighter than peoples faces it may be advisable to begin to use gain to adjust for the light conditions.

Higher levels of output gain result in a decrease in the signal to noise ratio and resulting in a noisier picture; so it is usually advisable to try to keep to 0dB gain up. For every dB of Gain up there is a corresponding reduction of the signal to noise ratio.

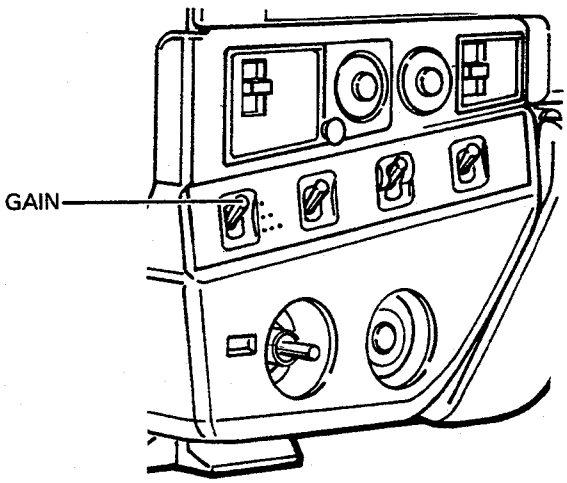


## 4.5.3 ALC

ALC mode is an Aperture Priority AUTOMATIC LEVEL CONTROL mode that can be programmed into the two dot or three dot position in the Gain switch #9.

Gain in low light and the Shutter speed in high light conditions are continuously varied to achieve good video signal levels based on the Automatic or Manual Iris settings.

ALC in Auto Iris extends F2.0 sensitivity from 125 lux down to 18 lux between 0dB and +18 dB gain.

The F16 operating range is extended from 8000lux up to 32,000lux.

This expansion is the equivalent of 3 Fstops of low light range and 2 stops of bright light range to give a total range similar to 11 Fstops.

ALC is also engaged during FULL AUTO SHOOTING.

When the Iris is set to Manual the Gain and Shutter speed will vary continuously from the fixed Fstop setting.

This very useful function can be used to hold the depth of field constant even though lighting conditions are changing.

In Manual Iris at F1.4 the exposure range is extended from 75lux at 0dB down to 9.4lux.

The speed of reaction in manual is gradual, so practice to learn the characteristics.

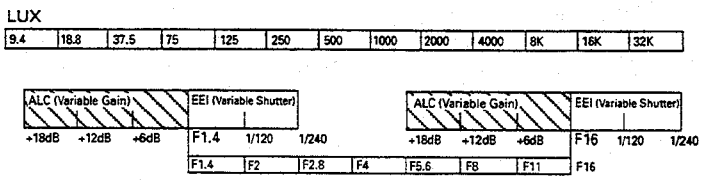


**FIXED F STOP RANGES**

# 4.5

## 4.5.4 GAIN, FSTOP AND SHUTTER SPEED RANGE

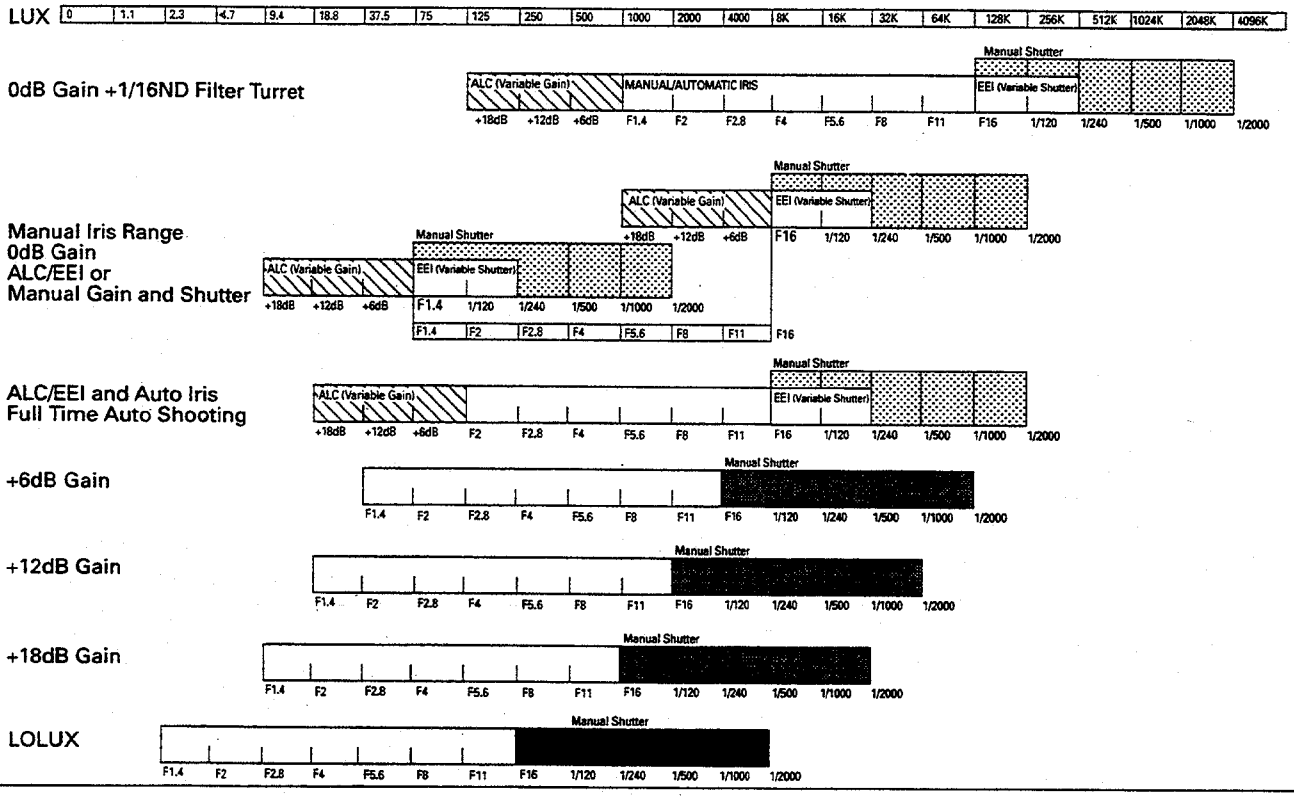


# 4.6 LOLUX

With this function a good dynamic range of brightness will be captured even under conditions where it is difficult to see with the human eye.

Because this is a 3 CCD chip camera the color rendition will also be true to life.

LOLUX enables shooting at 2 lux or 0.2 footcandles at F1.4. One footcandle is the equivalent of the amount of light cast by one candle at a distance of one foot.

It is similar to a +30dB gain up position.

The basic underlying principle of LOLUX is to combine the light gathering capacity of the CCD chip.

The signal to noise ratio and the resolution are reduced, but it is possible to shoot subjects otherwise impossible.

The resolution is approximately 270 lines.

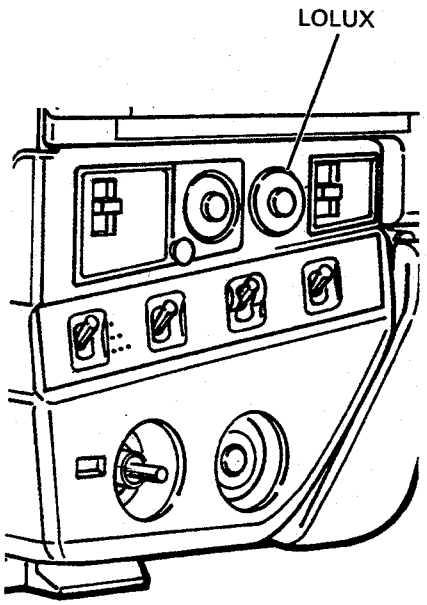


**BASIC OPERATION:**

Push the LOLUX button #7 momentarily to engage the function. Push again to release.

The regular GAIN settings will be inactive, but the Auto Iris and Shutter will operate normally.

ALC and LOLUX do not work together. When LOLUX is engaged the Shutter defaults to the previous settings.

In FULL AUTO SHOOTING MODE the only the Auto Iris and the Full time Auto White remain engaged.

# IRIS 4.7

The Iris system is the primary function in adapting various light levels to good video signal levels. The actual physical Auto Iris changes the Lens Iris position based on the Exposure Detection mode.

Automatic functions such as Variable Shutter or Variable Gain stem from the Iris setting, whether the Iris is in automatic or manual mode.

Understanding the way the camera detects light in the scene will help the camera operator take the best advantage of the various functions.

## 4.7.1 MULTIZONE DESIGN

The exposure detection system used for the Auto Iris is based on a multizone pattern that assigns a priority according to the probable important subject area.

Further from the center zone of these fields the importance of a bright object is less, and therefore will not disturb the automatic settings unnecessarily.

To visualize the multi zone in the viewfinder, hold the VTR trigger switch on the front while turning power on to the camera, with the OPERATE switch.

Turn off the camera to clear the display.

MULTIZONE WEIGHTING

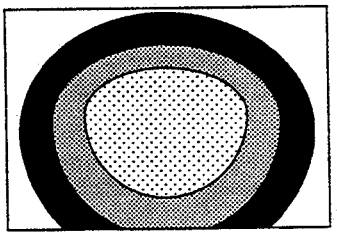

## 4.7.2 EXPOSURE DETECTION MODES

Since the dynamic range from dark to bright of possible lighting conditions exceeds that of any camera, the camera operator should make a judgement about the type of lighting on the subject of the scene.

There are four basic categories of lighting conditions that the KY-27 can accommodate with these settings: Peak, Average, Automatic Peak/Average Balance (APB), and Normal.

**A. Peak**

A fixed weighting ratio of 75% peak and 25% average. For use when it is important to capture detail in the highlights of the subject, and the subject dominates the whole scene.

The camera is basically linking the exposure to the highlights at 90% of the scene brightness.

PEAK

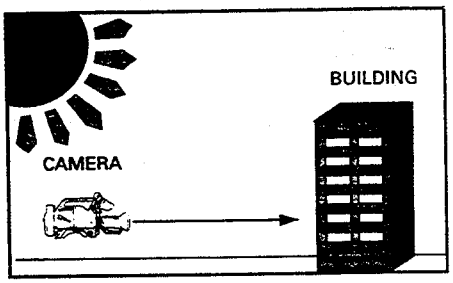


**B. Average**

A fixed weighting ratio of 25% peak and 70% average. For use when the subject material has bright highlights that are less important than the average exposure.

The camera is linking the exposure to objects in the range of 60% of all the brightness in the scene.

AVERAGE

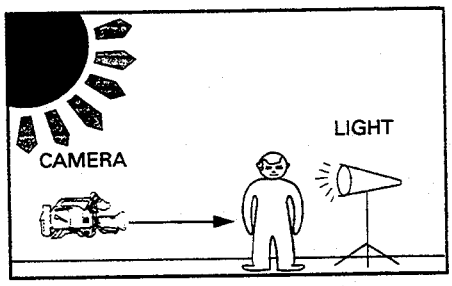


**C. APB**

Automatic Peak and Average Mix Ratio. In this mode the camera varies the Peak to Average weighting ratio governing the iris based on typical shooting conditions, and the multizone priority system.

The camera varies continuously from Average mode to Peak mode (60% to 90%) as the scene changes in time and composition.

APB

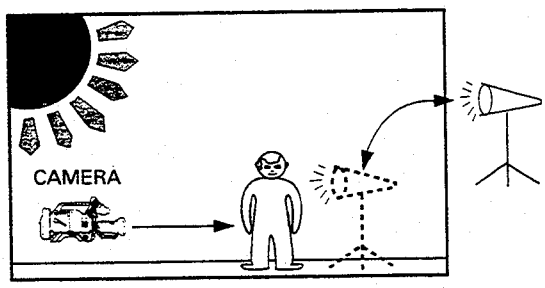

# 4.7

**D. Normal**

A fixed weighting ratio of 50% peak and 50% average. This setting is for shooting under conditions with varied lighting that is not changing.

The camera is basically linking the exposure to objects at 75% of the brightness in the scene.

For reflected light this is close to the brightness of a white person's skin.

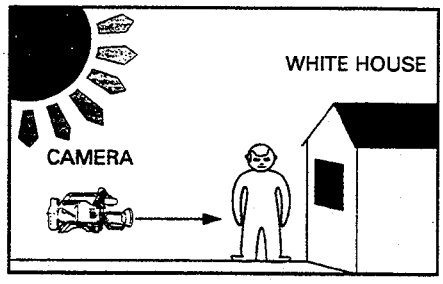


## 4.7.3 IRIS OVER/NORMAL/ UNDER

This switch #5 can be used to adjust the exposure system to Over or Under expose by about one half F stop.

Many conditions can cause the detection mode to expose high or low. Here are two examples.

**USE OVER:**

A back lit scene such as a person in front of a window, or a bright light in the scene will tend to be under exposed for areas lit reflectively.

**USE UNDER:**

A front lit scene such as a person under a bright local light or a spot light on a stage will tend to be over exposed.

THIS FEATURE OPERATES TO WITHIN ONE STOP OF IRIS FULLY OPEN OR CLOSED.

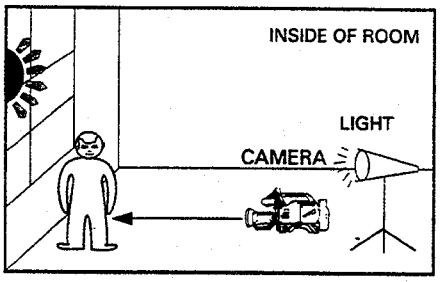


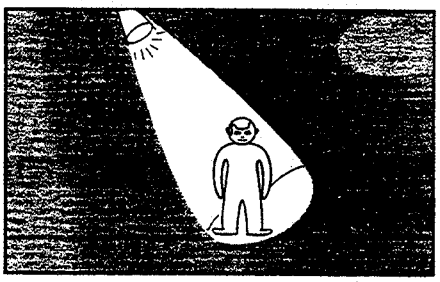


## 4.7.4 IRIS OPERATION

In normal operation the detection setting is not changed, but it can be modified using the Camera Set-Up menu set to IRIS DETECT.

**DETECTION SET-UP:**

Press the SET switch #13 twice to enter the Camera set up menu.

Continue to press the SET switch until the cursor reaches IRIS DETECT.

Use the UP and DOWN switches #14 to cycle between the four modes: Peak, Average, APB (Automatic Peak/ Average Balance), and Normal.

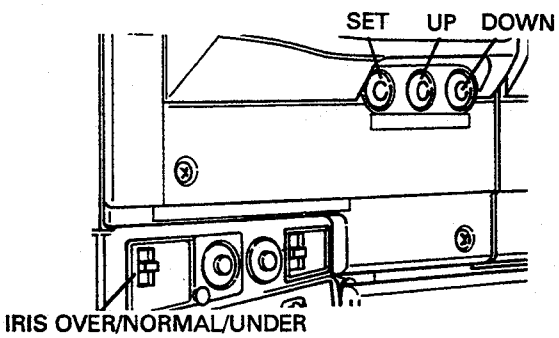


**ENGAGING AUTO IRIS:**

There are two methods to turn on the auto iris function.

**A. AUTO IRIS SWITCH**

Lens switch #6 on the lens servo sets the automatic iris continuously on or off.

A: Auto iris On and Remote operation.
M: Manual iris operation.

**B. MOMENTARY AUTO IRIS BUTTON**

This button on the lens servo activates the Auto Iris Function while it is held down only. The Auto Iris Switch must be in the Manual Iris mode (M).

**C. IRIS OVER/NORMAL/UNDER SWITCH**

This Switch selects over-exposure by about one half F stop if pressed upward and under-exposure by the same if pressed downward.

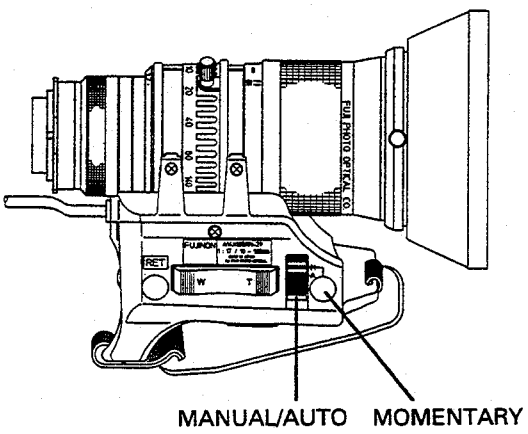

# FULL AUTO SHOOTING 4.8

The momentary Full Auto Shooting switch turns this function on and off, with an indicator light.

Next put the camera in ON/ST-BY and push the trigger button.

First the ALC combines the Auto Iris, Variable Gain and Variable Shutter Speed to control the exposure automatically.

The Gain will vary continuously to the maximum of +18dB. The Shutter speed will vary continuously to the minimum of 1/250th of a second. The Iris will operate down to F2.0 and up to F16 before engaging the Gain or Shutter.

The AUTOMATIC AVERAGE/PEAK BALANCE function (APB) allows the KY-27 to analyze if the scene is a Peak or Average situation and continuously vary its response according to changing conditions.

In addition the FULL TIME AUTO WHITE (FAW) function samples the spectrum of color temperatures in the image and determines the appropriate white balance, with proper skin colors as a control. See section 4.2 for further details about FAW.

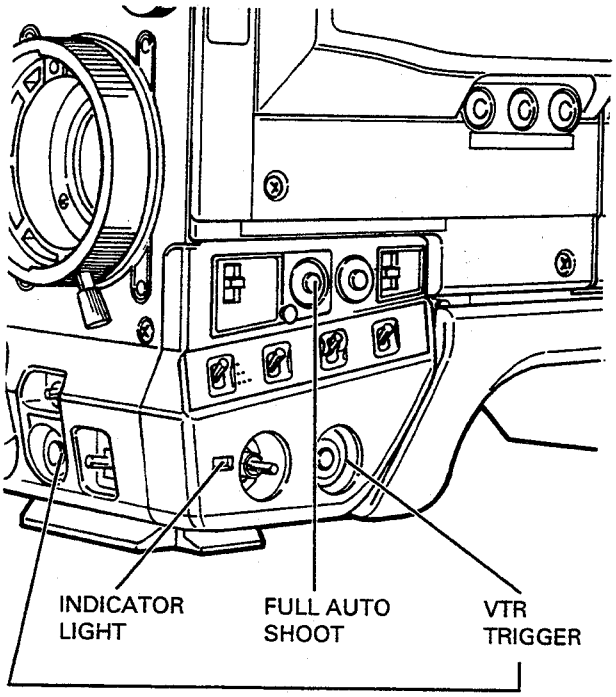


**Preconditions:**

- The Filter turret should be set correctly for the current lighting conditions.
- The Camera Operate switch and the Trigger buttons Must be used to begin recording.

**Priority:**

- The Full Auto Shooting function has priority over many other functions:
- Gain, Shutter speed, Variable Scan, Manual Iris, White Balance, IRIS DETECT.
- The Auto Iris automatically turns on even if the lens switch is set to manual.

**Independent functions:**

- LOLUX will override the Variable Gain and the Variable Shutter functions of Full Auto Shooting. The Full Time Auto White and Automatic Iris functions remain.
- The Iris Over/Under switch is completely independent of Full Time Auto White.

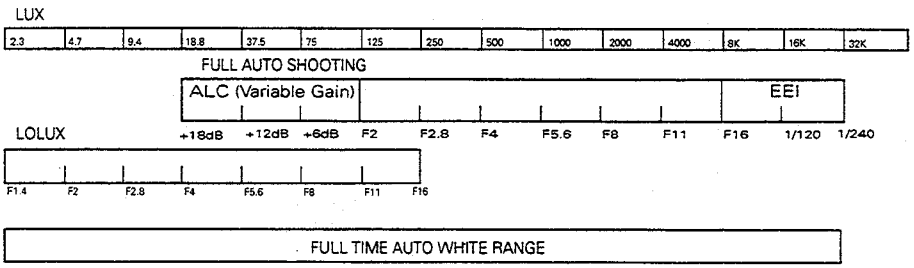


**FULL AUTO SHOOTING AND LOLUX RANGE**

# 4.9 ACCUMULATED RECORD TIME

Accumulated Record Time is the approximate total VTR record time in minutes and seconds. A common practice is to reset this to zero when a tape is inserted.

This indication is selectable for the center position of STATUS DISPLAY 1 mode, or for STATUS DISPLAY 2 mode. Remaining Record Time will swap positions with Accumulated Record Time between STATUS DISPLAY 1 and 2.

The time represents the period in Record mode between Trigger operation. The represented time is approximate because the VTR will give a delay before going in to record mode. The actual tape duration is not measured by this function.

The use of fast forward, rewind search or play will not change the value.

When the current duration of recording is needed this timer can be reset to zero.

The ACCUMULATED RECORD TIME RESET/CAMERA SET-UP button has two functions, the first of which is Accumulated Record Time Reset to Zero.

- First Push the SET button once.
- Then Push the DOWN SET button once to set the current Accumulated Record time to zero. The Viewfinder will be cleared immediately.

This overlay mode is automatically cleared after 5 seconds if the time is not reset.

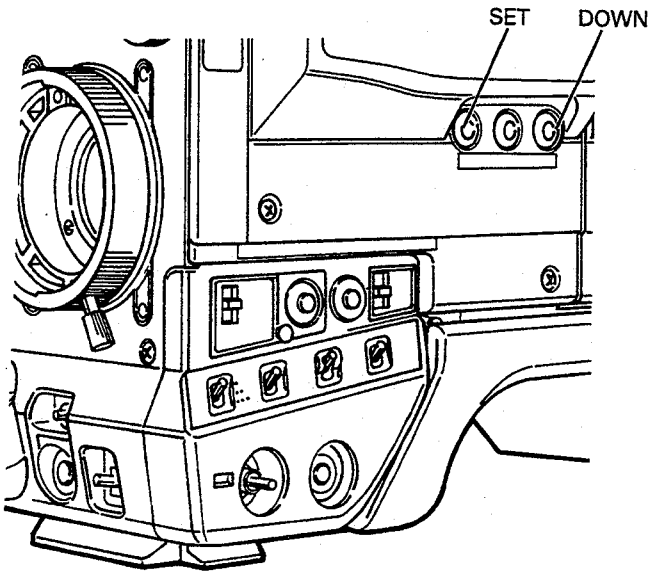


"VIEW FINDER"

ACC REC TIME RESET
12:00
PUSH "DOWN" BUTTON

# CAMERA SET-UP 4.10

## 4.10.1 ADJUSTING CAMERA SET-UP

- Select by pushing the SET button twice.
- Continue to push the SET button to cycle through the Camera Set-Up Menu until a function is selected.
- Pushing the adjacent UP or DOWN SET buttons to select a new function condition.

This overlay mode is automatically cleared after 5 sec.

**WARNING!** This Mode will change a camera configuration setting if the UP or DOWN SET buttons are pressed.

| | |
|---|---|
| CONTOUR | Is the amount of detail enhancement in steps from -10 to -1, NORMAL, 1 to 10 See this section for more details. |
| M BLACK | Is the pedestal level in steps from -10 to -1, NORMAL, 1 to 10 See this section for more details. |
| IRIS DETECT | Is the exposure detection mode. See section 4.7 for more details.<br>AVG = Exposure linked to 60% brightness<br>PEAK = Exposure linked to 90% brightness<br>NOR = Exposure linked to 75%brightness<br>APB = Exposure link varies between 60% to 90% brightness |
| GAIN | Always One dot: • = 0dB<br>Two Dots and Three dots are selected as either:<br>•• : ••• = 9:18, ALC:18, 6:ALC, 6:9, 6:12 |
| AW2 | The AW2 White Balance position can be assigned to:<br>AUTO= Auto White Balance Memory 2<br>FAW = Full Time Auto White |
| ZONE MODE | The Safety zone aspect ratio can be set to:<br>STD = 4:3 width to height<br>CINEMA = 16:9 width to height |
| REC TIME | ACCUM = Status Mode 1 Accumulated Record Time<br>Status Mode 2 Remaining Record Time<br>REMAIN = Status Mode 1 Remaining Record Time<br>Status Mode 2 Accumulated Record Time |
| LENS TRIG | NONLOCK: Most 12 pin lenses use this momentary mode to trigger the VTR.<br>LOCK: Many 8 pin lenses use this constant mode to trigger the VTR. |

CAMERA SET UP

| | |
|---|---|
| CONTOUR | NORMAL |
| M BLACK | NORMAL |
| IRIS DETECT | NORMAL |
| GAIN | 0 : 9 : 18 |
| AW2 | AUTO |
| ZONE MODE | STD |
| REC TIME | ACCUM |
| LENS TRIG | NON LOCK |

DEFAULT SETTING

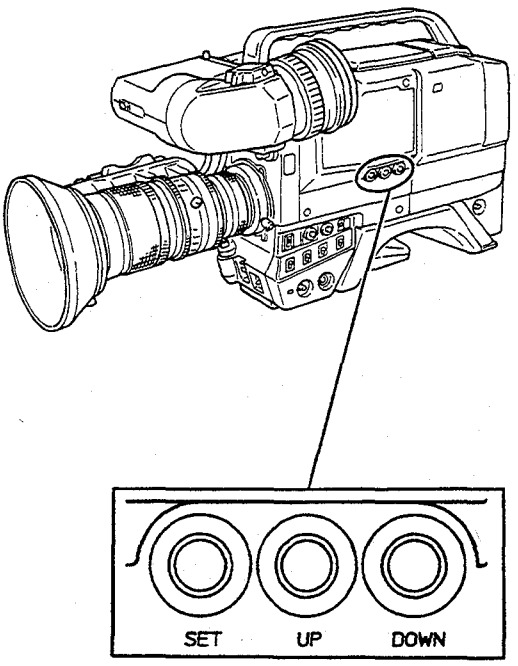

# 4.10

## 4.10.2 CONTOUR CORRECTION

The amount of contour correction can be increased or decreased from the standard level. All video signals have some contour correction to help with the perception of sharpness.

Dark edges are made a little darker and Light edges are made a little lighter.

This can be very helpful to make low contrast scenes crisper.

If the scene originally has too much detail the contour correction can be reduced.

Generally Contour Correction is added by many different devices in the production process and the distribution and display process.

This tends to expand the Dark and Light edges more and more with each generation and each device from VCR to TBC to Monitor.

From this perspective it is better to keep the contour enhancement to a minimum, or test to see what happens to questionable scenes after post production and distribution.

CONTOUR

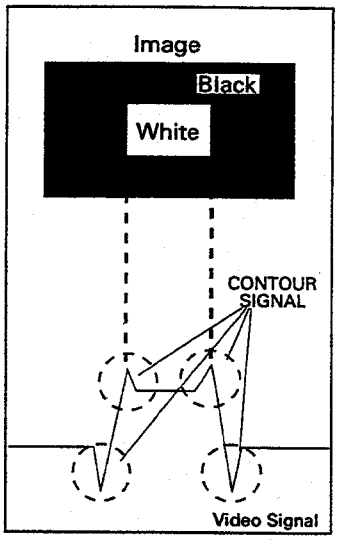


## 4.10.3 REFERENCE BLACK LEVEL

The basic black levels can be increased or reduced in several steps.

Lowering the black level can improve contrast in bright or low contrast scenes. Video noise will tend to be suppressed.

Raising the black level will improve detail visibility in shadows. Noise will also be increased much like pushing film.

Another effect of raising the black level is that all video levels are raised including highlights. This can lead to compression and loss of detail in bright areas.

In NTSC cameras that have "Set-Up" (required by broadcast standards in some countries) the black level cannot be reduced below 7.5 IRE.

One can use a chip chart to verify the effects of changing the Black Level.

MASTER BLACK

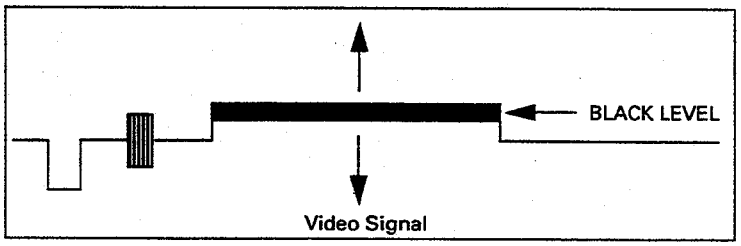


## 4.10.4 IRIS DETECT

See the IRIS SECTION #4.7.2 for reasons to select the different exposure detection configurations.

## 4.10.5 GAIN (SENSITIVITY) assignment

See the Gain section #4.5 for a discussion of gain.

There are five gain selection assignments:
•:••:••• =0:9:18, 0:ALC:18, 0:6:ALC, 0:6:9, 0:6:12

**GAIN chart**

| | | | | | |
|---|---|---|---|---|---|
| • | 0dB* | | | | |
| •• | ALC (0 - 18 dB) | 9dB* | 6dB | | |
| ••• | 18dB* | | ALC (0-18dB) | 9dB | 12dB |

* Factory Setting

## 4.10.6 FULL TIME AUTO WHITE/ STANDARD AUTO WHITE 2

See section 4.2.2 for the principle behind Full time Auto White.

## 4.10.7 SAFETY ZONE TYPE

The Safety zones cycle within two different ratio types.
The Cinema mode is useful for determining the safety zone when cropping for 16:9 cinema ratio presentation.

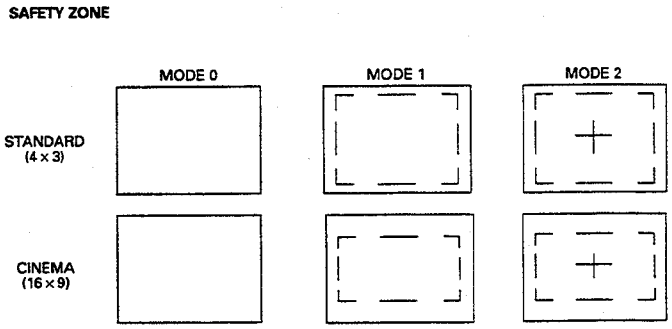


## 4.10.8 REC TIME

The Status 1 Display mode can show either Accumulated Record Time or Remaining Record Time.
The two categories swap position between Status 1 and Status 2.

Accumulated Record Time is measured from when the trigger is activated to when it is shut off. This may differ from actual tape time due to the delay for the deck to preroll and physically begin to record.

Remaining Record Time is an estimate of the remaining tape time based on the actual tape length.

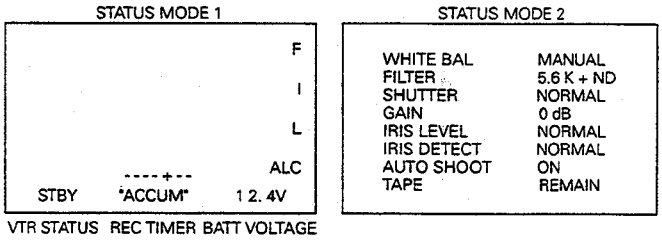


REC TIME SET TO "ACCUM"

## 4.10.9 LENS TRIGGER

Different lenses have different trigger modes.

Most 12 pin lenses use the momentary NONLOCK mode to trigger the VTR.

## 4.10.10 SYSTEM RESET

To quickly reset all camera setup values and function conditions back to the default settings, hold in the SET button while turning the camera power to ON with the OPERATE switch.
All functions with momentary switches will be reset.
All functions with mechanical switch positions will keep that switch setting.
White Balance Memories will not be affected.
See the chart for default conditions.

| System Defaults | |
|---|---|
| **Camera Setup** | |
| Contour | Normal |
| Master Black | Normal |
| Iris Detect | Normal |
| Gain | 0:9:18 |
| Auto White Memory 2 | Auto White Memory 2 |
| Sefety Zone Mode | Standard (4x3) |
| Record Time | Accumulated |
| Lens Trigger | Non Lock |

| System Defaults | |
|---|---|
| **Function Conditions** | |
| Iris Over/Normal/ Under | Switch Position |
| Full Auto Shooting | Off |
| LOLUX | Off |
| Shutter ON | 1/100 (NTSC) 1/120 (PAL) |
| Variable Scan | 1/60 (NTSC) 1/50 (PAL) |
| Status Mode | Mode 0 |
| Safety Zone | Off |
| Accumulated Record Time | 00:00 |
| White Balance Memories | No Change |

# 4.11 ZEBRA PATTERN (VIDEO LEVELS)

Pressing this switch momentarily turns on or off a Zebra stripe pattern in areas of highlights between 80 to 90 percent brightness in the viewfinder.

If you cannot achieve a zebra pattern in areas brighter than a operators face, or in highlights in general, you should consider adjusting for greater gain.

If dark areas contain zebra patterns you should consider adjusting for a higher shutter speed or using the Neutral Density filter.

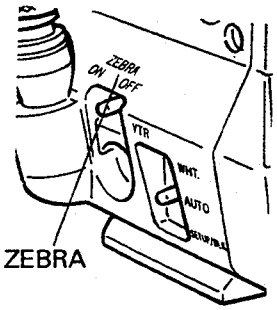


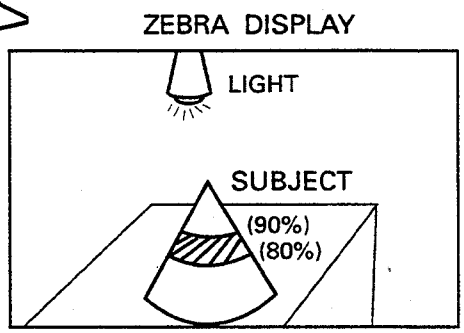


# 4.12 LENS CLOSE-UP MACRO FUNCTION

The Macro function of standard lenses used with the KY-27 allows the shooting of very small and very close objects.

The minimum distance from the standard lens to the subject is around 20 millimeters at the 10.0 widest angle zoom setting.

**OPERATION**

1 Set Focus to the Infinity position.

2 Select Manual Zoom mode

3 Set Zoom to the Widest angle position

4 Turn the Macro ring until it stops in the full Macro position.

5 Position the camera so as to give the necessary subject image size.

6 Now focus on the subject using the Macro Ring instead of the Focus Ring.

The focusing range with the Macro Ring is from close to Infinity if the Focus Ring is in the Infinity position.

7 To make the object image size smaller reposition the camera.

8 Adjust the focus again with the Macro Ring.

9 Remember to disengage the Macro Ring when finished.

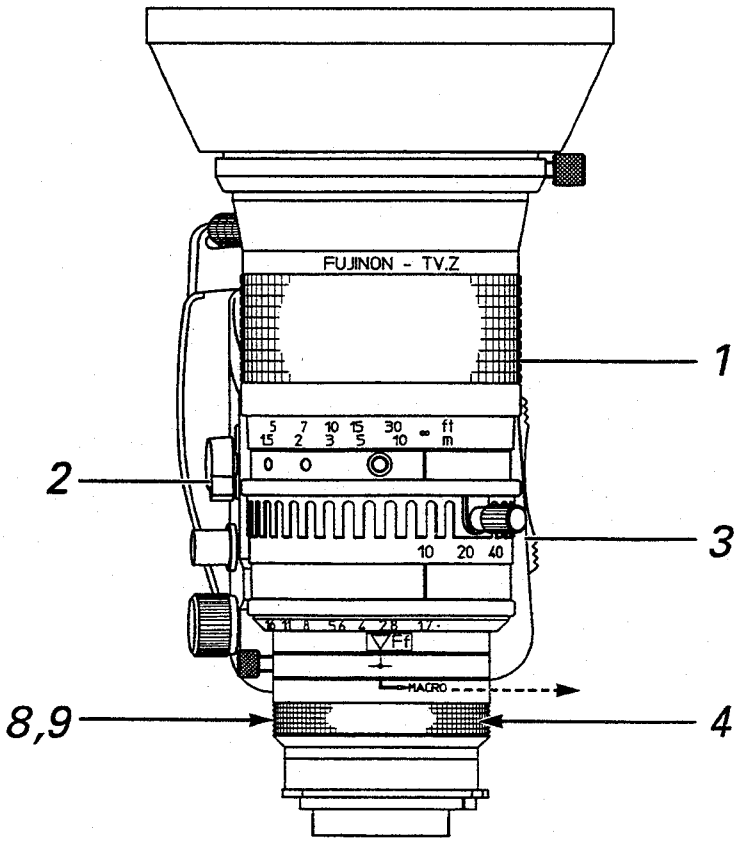

# COLOR BARS, ADJUSTING EXTERNAL MONITOR 4.13

The color bar signal is activated by pushing the MODE switch down in the "BARS" position.

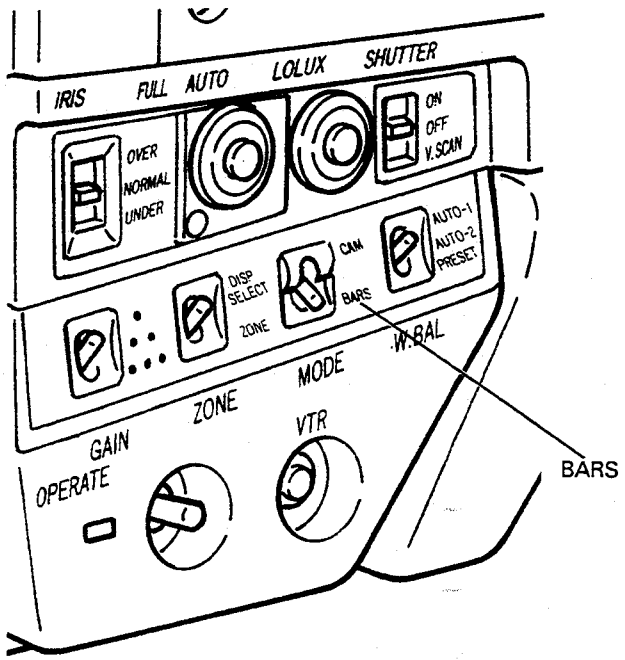


**VTR and POST PRODUCTION USE**

It is very important to record color bars at the beginning of every tape and after the camera setup has been adjusted.

Without recording color bars there is no good reference for all the colors levels or the dark to light range.

Later, varied and random adjustments of post production equipment could tend to distort the color, brightness and contrast of the picture.

**GENLOCK USE**

The color bars are also vital for setting the phase relationship of different cameras used in a multi camera system. See Genlock section 5.3.

**MONITOR SET UP USE**

Color bars are also the basic tool in setting a monitor's color, contrast and brightness set-up to reference levels. This is very important for knowing when to adjust the white balance of the camera.

1. Connect a color monitor to the cameras composite video out terminal.
2. Set the camera to Bars output.
3. Set the monitor to display the Blue only signal.
4. Turn the monitor's chroma control so that sections marked A and B are the same brightness.
5. Turn the monitor's hue control so that sections C and D are the same brightness.
6. Set the monitor to display all three colors, RGB.
7. Turn the monitor's Bright control so that section E disappears and section G just barely appears.

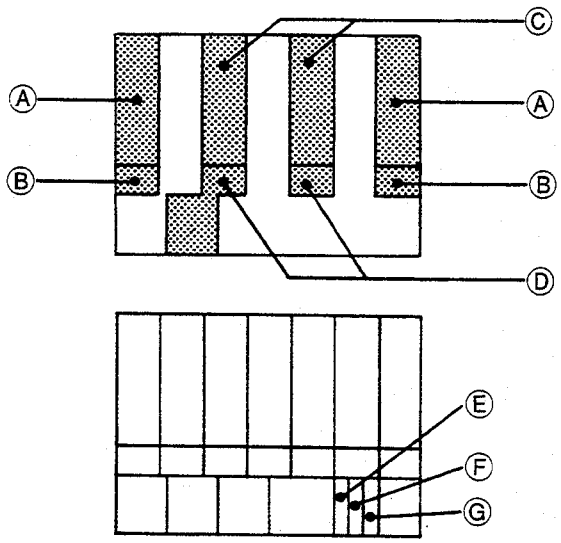

# 5 OPERATION WITH OTHER EQUIPMENT

## 5.1 OPERATING PROCEDURE WHEN DOCKED WITH PROFESSIONAL S-VHS or other VTRs.

First install the Dockable VTR with the correct adapter, or if necessary have your dealer install the VTR. See section 6 for installation instructions.

Then complete basic camera preparation in section 3.1 and 3.2 and proceed to operate the system as a camcorder.

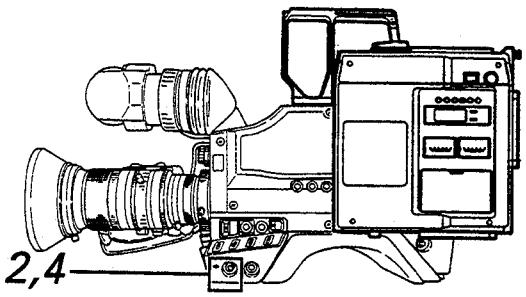


### 5.1.1 BASIC RECORDING OPERATION

#### 1 VTR POWER ON

Install a charged battery pack or plug in the AC power adapter.

Set the Master Power Switch on the VTR to DC.

The VTR is now in Stop Mode and the head drum is not spinning. The Camera is off, but the Iris is held closed to protect the CCDs. Operate light is Dim Red.

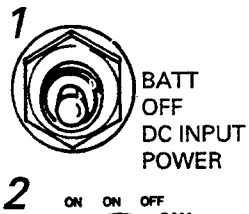


#### 2 TURN ON THE CAMERA

Switch the Camera/VTR operate switch On/Save.

The viewfinder is now on. The camera auto iris will now open the iris. The VTR is still in the stop mode. If the status display is switched to mode 1, The viewfinder reads its STATUS as SAVE. Operate light is Dim Red.

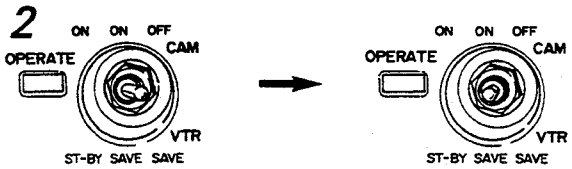


#### 3 PREPARE THE CAMERA

Perform basic use set up steps 3.2.1 up to 3.2.9.

This includes Switch setting, Set up, White balance, and tripod mounting.

STATUS MODE 1

"SAVE" 00 : 00 1 2. 4V

VTR STATUS REC TIMER BATT VOLTAGE

#### 4 ENABLE THE CAMERA AND VTR

Change the Camera/VTR switch to On/Standby.

Operate light is Bright Red.

The VTR can be safely set in to record mode now. It is better to load a cassette after this step because the VTR can be commanded to load the tape around the heads without rapidly dropping the VTR into Save mode. Proceed to Save mode after determining that the tape is properly loaded.

If a tape happens to be in the VTR already the transition to the record Pause mode will be more controlled.

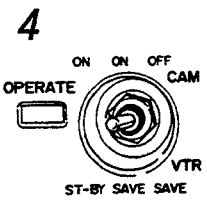


STATUS MODE 1

"STBY" 00 : 00 1 2. 4V

VTR STATUS REC TIMER BATT VOLTAGE

## 5 INSERT CASSETTE

Open the deck by pressing eject/open and place a cassette in the VTR.

The VTR is now holding the cassette in an unlaced mode.

Professional S-VHS decks will not enter record in this mode.
With MII and Betacam Decks Recording can be started by the Triggers while still in the unlaced mode, but it takes a long time to wrap the tape on the video heads. Allow for about 15 seconds before the shot needs to start from this mode.

## 6 WRAP THE TAPE

Push play-record on the VTR to wrap the tape around the VTR head drum.

The VTR Laces the cassette and leaves it in Record-Pause mode. This is ready for quick recording after about 2 seconds.

## 7 SET UP THE SHOT

Adjust video image for focus and zoom angle. (see section 3.2.11 on lens use)

## 8 PUSH VTR TRIGGER TO RECORD

Push the trigger on the camera or lens.

The tape deck will enter record in about 2 seconds. The STATUS 1 viewfinder display will show the word REC.
The viewfinder Rec/Alarm light will blink green during pre-roll and then turn solid when the VTR enters Record Mode.

## 9 PUSH VTR TRIGGER AGAIN TO STOP RECORDING

The VTR will return to Record-Pause Mode. The Green Rec/Alarm button will go out and the STATUS 2 message will change to STBY.

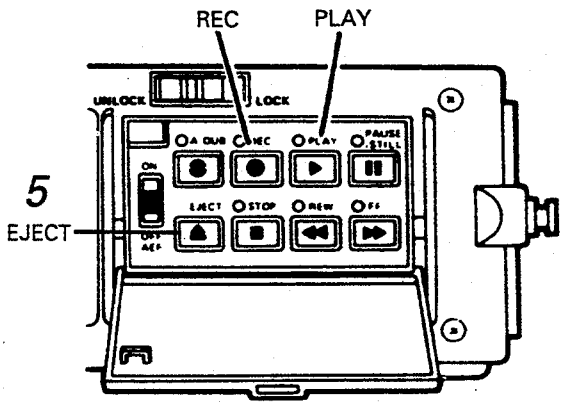


STATUS MODE 1

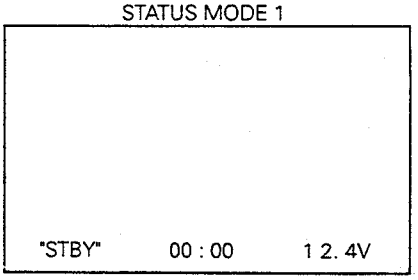


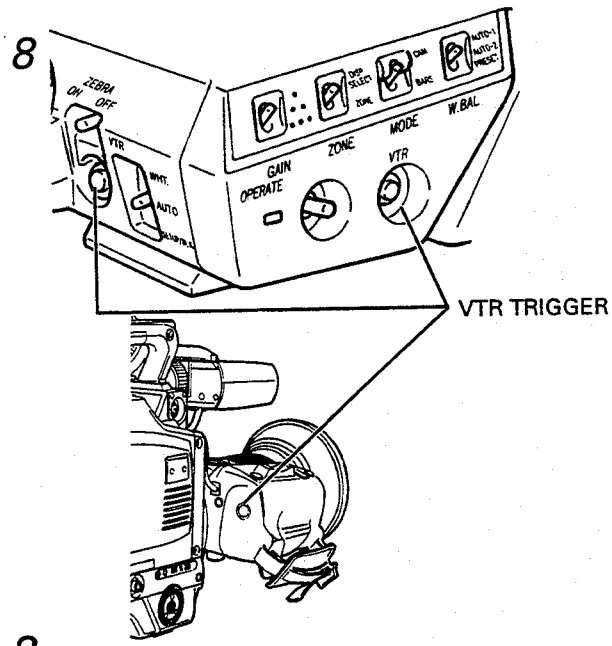


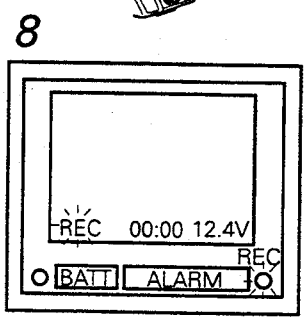


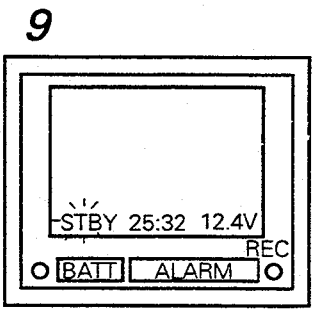

# 5.1

## 5.1.2 POWER SAVE OPERATION

After placing the VTR in record pause mode (steps 1 to 6) or after using the trigger to stop recording (steps 1 to 9), it is possible to save power by parking the heads of the VTR in record pause mode with the tape laced around the head drum.

Further power can be saved by turning the camera off in this mode.

(Hi8 decks have no power save mode)

### 10 SWITCH THE VTR TO SAVE

Switch from Cam/VTR "ON/ST-BY" to "ON/SAVE"

The VTR power is now off in Record Pause mode. A picture is visible in the viewfinder.

**WARNING:** Do not trigger the VTR in this mode (See page 41)

### 11 SWITCH THE CAMERA TO OFF

Switch from Cam/VTR "ON/SAVE" to "OFF/SAVE"
Both the Camera and VTR power are off with Tape laced on the video head drum in record-pause mode.

### 12 SWITCH THE CAMERA ON

Switch Cam/VTR from "OFF/SAVE" to "ON/SAVE"
The Viewfinder and camera turn on.

### 13 TURN THE VTR BACK ON

Switch Cam/VTR from "ON/SAVE" to "ON/ST-BY.
The VTR head drum is spinning again and Record-Pause Mode has been activated.

### 14 START AND STOP RECORDING

Push the trigger on the camera or lens to record, and again to stop recording.

10

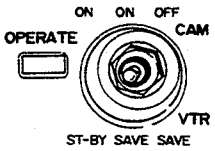


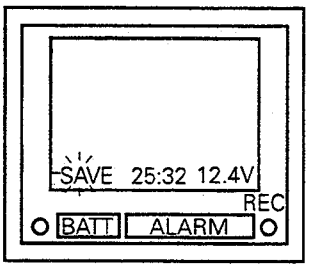


11

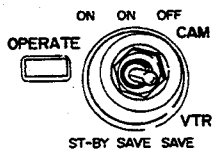


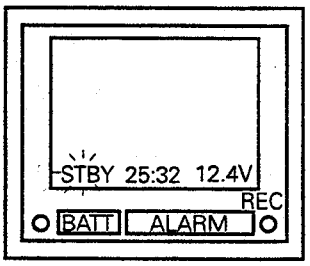


12

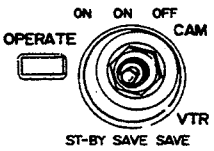


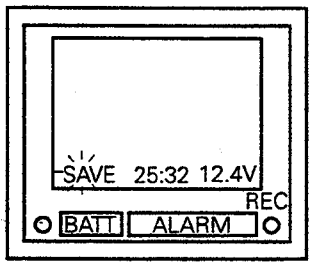


13

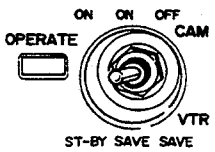


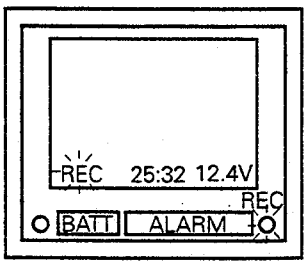


## 5.1.3 SAFELY ENDING A RECORDING SESSION AND EJECTING

After entering Record-Pause mode through steps 1 to 6, 1 to 9 or 1 to 14 some care must be taken to end the recording session without damaging the tape.

### 15 UNWRAP THE TAPE FROM THE HEAD DRUM

Open the VTR panel and push the stop button.
Switch the VTR to Stop mode.

The Tape is unlaced from heads.

### 16 EJECT THE TAPE

Press the eject button on the VTR to remove the tape.

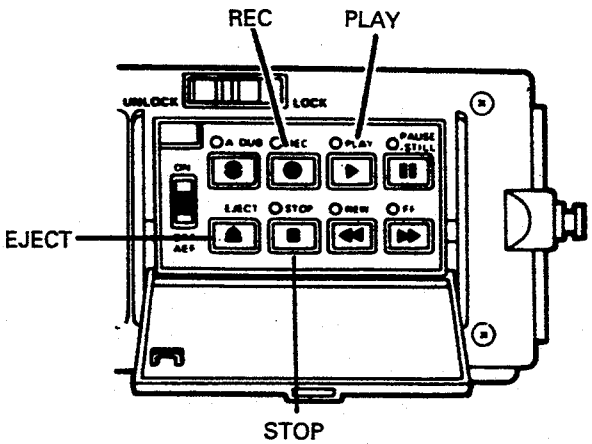

## 17 SHUT THE CAMERA OFF

Change the Cam/VTR switch to Off/Save.

The Viewfinder and Camera will turn off.

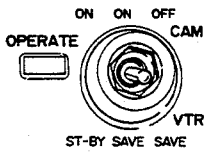


## 18 SHUT THE VTR OFF

Switch VTR master power to off.

Ejecting the tape will not be possible after waiting until this step. Turn the master power back on to eject the tape.

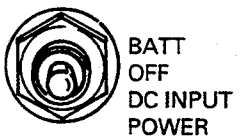


## 5.1.4 MONITORING EE PICTURE

After the VTR has been placed in Record/Pause mode it is possible use the RET (Return Video) switch to monitor the video signal from the deck.

Pay attention to the REC/ALARM light in the viewfinder to check if Recording is on.

**WARNING:** The viewfinder STATUS DISPLAY MODES 1 and 2 are not shown in this mode. The VTR STATUS will not be shown in the viewfinder image. If there is no STATUS display in the viewfinder check this switch first!

EE stands for Electric to Electric. This means that the video signal is being sent back to the camera from the VTR, but before it is recorded on the tape.

This is a safety position to make sure all the connections are correct, but does not let you know if the heads are dirty during recording.

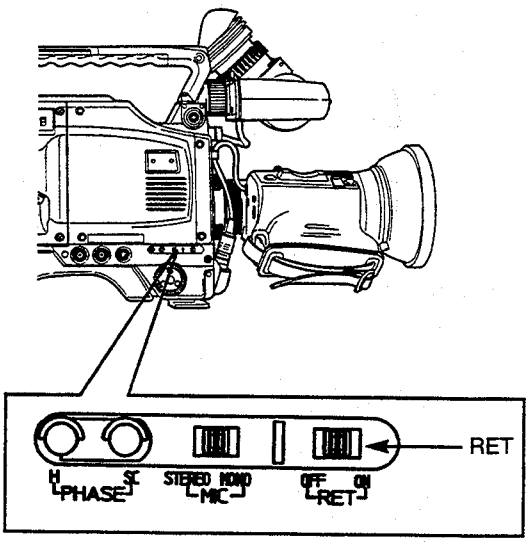


## 5.1.5 MONITOR SOUND LEVELS AND SIGNAL DURING RECORD OR PLAYBACK

Monitor the EE audio signal during Recording to make sure sound is reaching the audio recording head.

It is also the only way to know if the sound is distorted.

Attach a headphone to the monitor jack on the VTR or KA-27 adapter. Set the recording levels using the level controls on the VTR (check the VTR manual for this location.)

Test the VTR output levels so as to understand what volume relates to what signal level recorded on tape.

The Audio level display is available only from dockable VTRs.

VTRs without return audio or portable VTRs will not give an audio level display.

The viewfinder 0 dB level must be set to match the VTR meter 0 dB audio level.

This is done with the VTR monitor level adjustor.

Otherwise the viewfinder display will not be accurate.

This is done with the VTR monitor level adjustor.

Otherwise the viewfinder display will not be accurate.

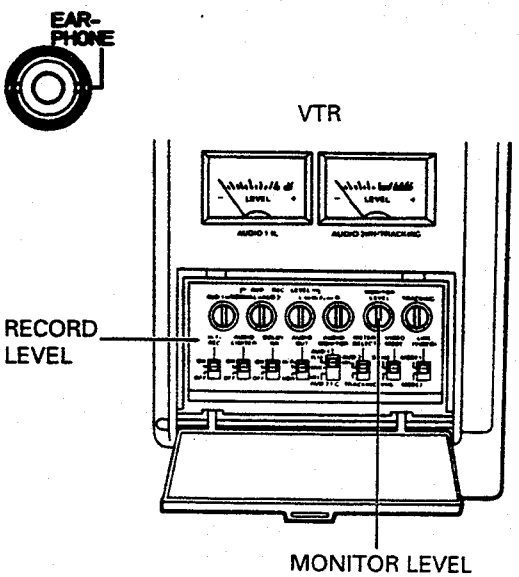

• Refer to the section 2.3.2 "MODE SELECT switch" of the KA-27's service manual (No. 60073) on page 3-1.

# 5.2 OPERATION WITH EXTERNAL VTR

## 5.2.1

The KA-27 Camera adapter allows the Stand-alone use of the camera:

To power the camera so as to supply video directly from the KA-27 Y/C video output or the camera Composite video output.

To connect directly to a Portable VTR or Remote Camera Control Unit through the multipin connector.

The KA-27 adapter is not intended for use with any other cameras.

See section 3.2.1 chart on page 36 for an overview of the KA-27 switch positions.

## 5.2.2 KA-27 TYPICAL SWITCH SETTINGS

### 1 POWER MASTER SWITCH

Choose the power source:

VTR/RM: VTR power through Multipin connector.

DC: Power from onboard Battery pack or 4 pin DC input.
(The 4 pin input has priority over the on-board battery.)

### 2 CAMERA/ADAPTER MIC SWITCH

Choose the Camera mic input or the Adapter mic input.

### 3 MIC AUDIO OUTPUT LEVEL SWITCH

Match the Adapter Audio output level to the portable VTR input level, -20 dB line or -60 dB Mic level.

See chart page 36.

### 4 COMPONENT VTR MII/BETA SELECT SWITCH

Choose the MII or Beta standard Component output.

### 5 SIGNAL OUTPUT: COMPONENT/YC/RGB SWITCH

Choose one of these three signals to supply the VTR through the multipin cable.

A composite signal is always available in the multipin.

See chart page 36.

### 6 VTR/REMOTE CONTROL UNIT SWITCH

Set to VTR for any kind of VTR connection.

**Note:** Certain 10 pin connector VHS VTRs with Ground Start trigger modes require an internal adjustment to the KA-27. See the chart on page 36 and consult your service representative.

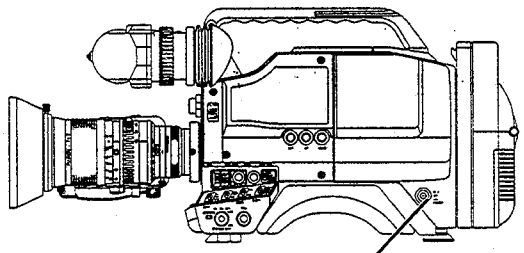

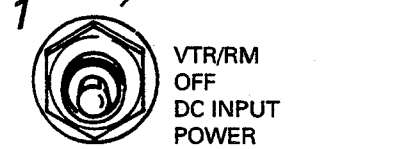


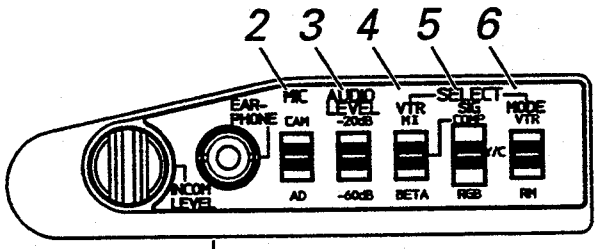


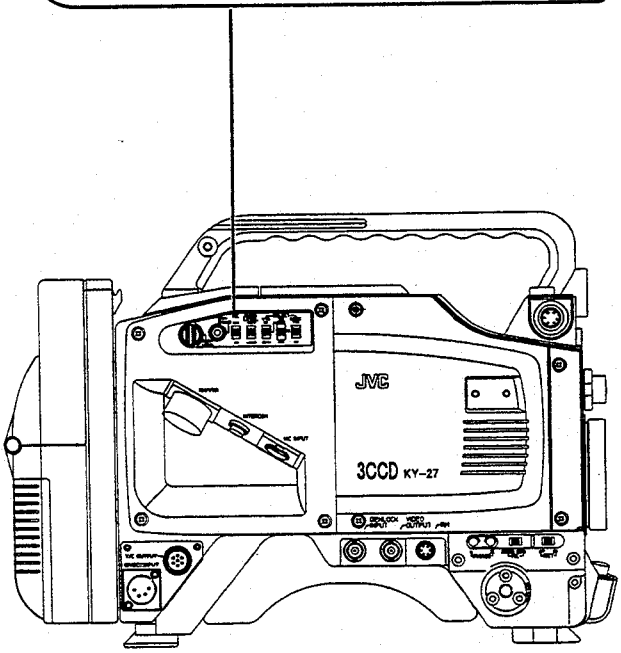

Internal power from AG-7400, AG-6400, BR-1600 is marginal and not advised.

These features are not available on some decks.

Remote control
Rec indicate
VTR alarm
Audio monitor
E to E video
battery alarm

## 5.2.3 KA-27 INPUT AND OUTPUT CONNECTIONS

Be sure to turn off the power while making connections.

### 1 VIDEO OUTPUT (Y/C 3.58 NTSC) (Y/C 4.43 PAL)

Video output is for Camera Video only. Return Video from the VTR, or Viewfinder STATUS are not available. This output is always active.

### 2 DC INPUT

12 V power connector selected by switch #1 and has priority over the Internal Battery Pack mounted on the back of the KA-27.

### 3 REMOTE CONTROL/VTR MULTIPIN CONNECTOR

See the chart for proper cables for different VTRs.

### 4 INTERCOM CONNECTOR

This is for talk back intercom use with the Camera Control Unit. The Headset should be configured with a connector with the proper tip/ring/sleeve configuration and headset and microphone impedance. This changes with different applications of the remote control units RM-P200 or RM-P300.

### 5 MICROPHONE INPUT (UNBALANCED)

Select this mic level only input with switch.

### 6 INTERCOM LEVEL CONTROL

Set the volume of the intercom headset

### 7 EARPHONE CONNECTION

Monitors the E to E audio signal returned from the VTR.

The VTR may need to be in record/pause mode for audio monitoring.

Some VHS Only VTRs do not send return Audio.

### 8 BATTERY HOLDER

The standard battery holder can be used for NP-1 type and JVC NB-G1 Batteries.

The 4pin 12V DC connector has priority over this battery holder.

## 5.2.4 VTR CABLE CHART

The VTR cables are shown in the Graphic.

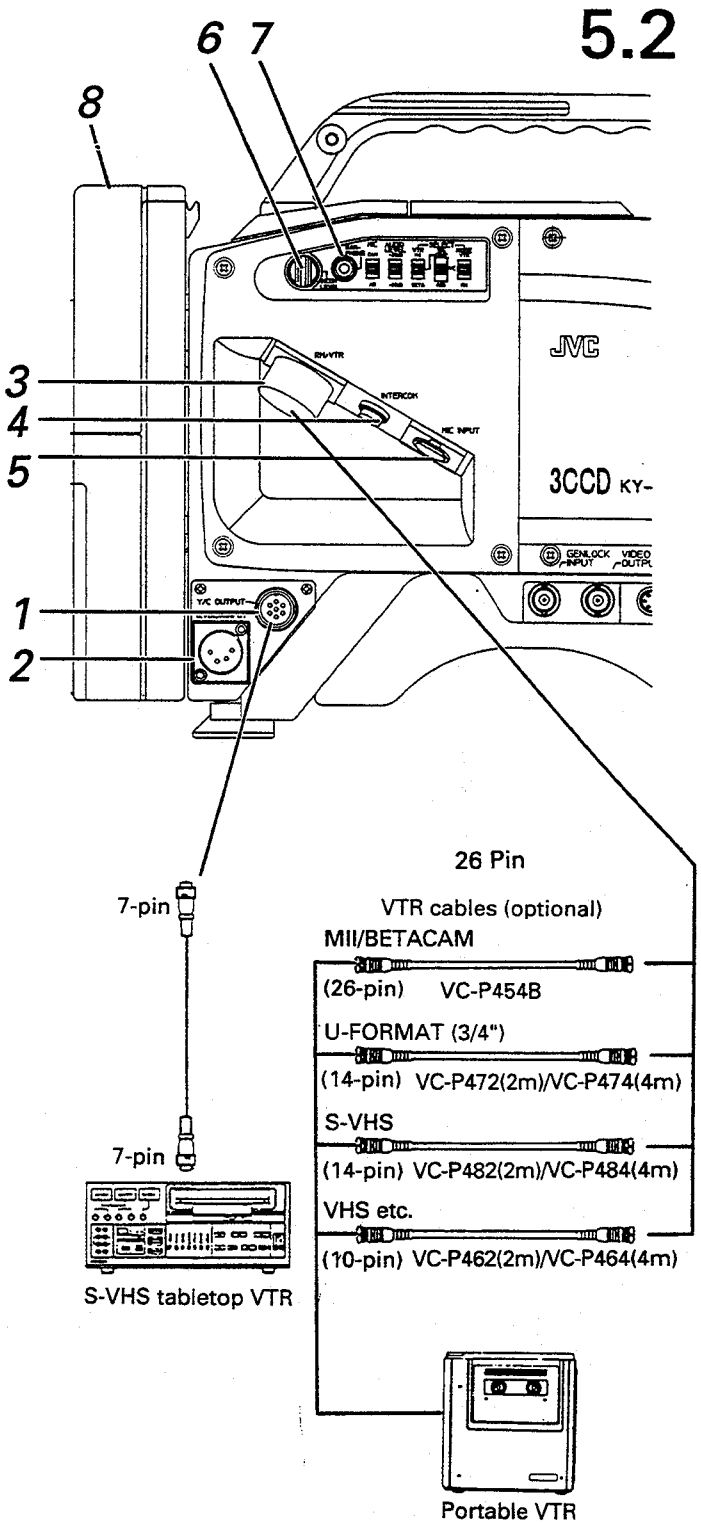


NOTE: When S-VHS portable VTR is connected, it is recommendad to use –20dB audio output on camera and –20dB input level ("H" position) on VTR.

# 5.3 GENLOCK OPERATION

The genlock function is provided for synchronizing the camera video output signal with other cameras, switchers or devices.

The camera's signal can be adjusted relative to a reference black burst or composite video signal.

The video signal itself can be synchronized even if the camera is being used as a camcorder.

The camera can be genlocked through the external genlock input or through the camera remote control unit.

**Phase adjustment**

After supplying a genlock reference source, adjusting the two controls on the right side of the camera will conform the horizontal phase and color phase.

**H:**

The **Horizontal Sync Phase** adjustment controls the position of the scan very precisely so that the reference and the output video are locating the scan at precisely the same point in the picture at the same time.

A badly adjusted horizontal sync phase can cause a complete failure to see an image, and minimally causes a horizontal shift between two similar pictures.

**SC:**

The **Color Subcarrier Phase** will precisely match the color hue of the reference and the video output. This phase relationship is described by 360 relative degrees, easily viewable with a color bars signal and a Vector scope.

The most precise adjustment can only be made with the use of external test instruments such as a waveform monitor or oscilloscope and a vectorscope, but the these settings can be approximated with careful examination of the picture.

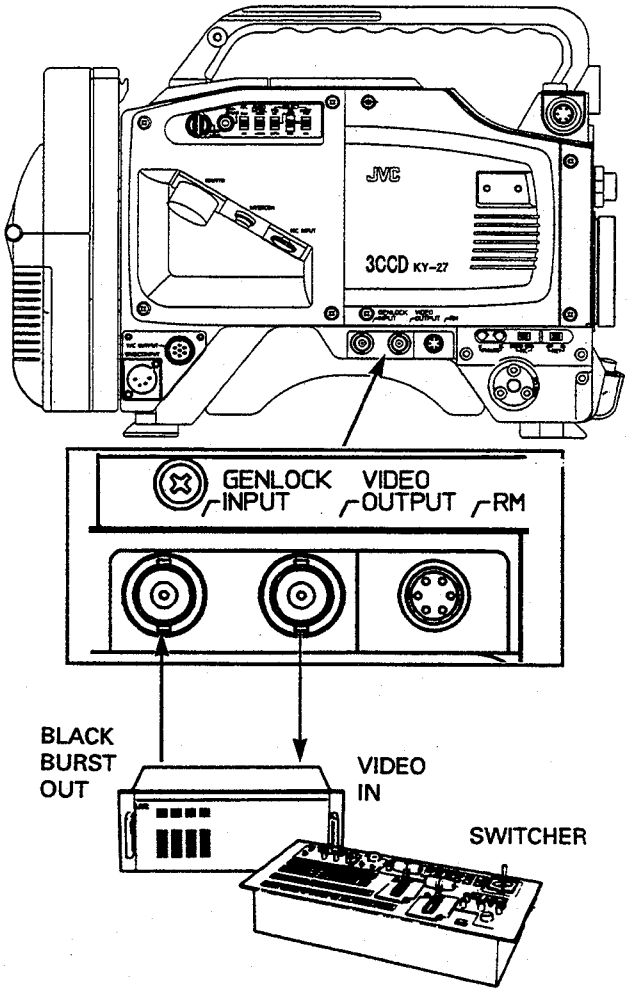


# 5.4 REMOTE CONTROL UNITS

## 5.4.1 KA-27 Settings and connections

Before connecting the Remote Control Unit, make sure that all power switches are off.

Select the needed signal; component, RGB or Y/C with switch #5 on the KA-27.

Select Component MII or Betacam signals with switch #4 on the KA-27. (See page 66.)

## 5.4.2 RM-P200

The RM-P200 is a versatile camera control unit that combines many features needed for studio or remote Stand-Alone operation.

Control and power is supplied for the camera to a distance of 100 Meters (325 feet) using the optional VC-P110 series camera cables. Cable Signal Level compensation is finely adjustable. Intercom connection and Tally trigger / indication are provided.

RM-P200

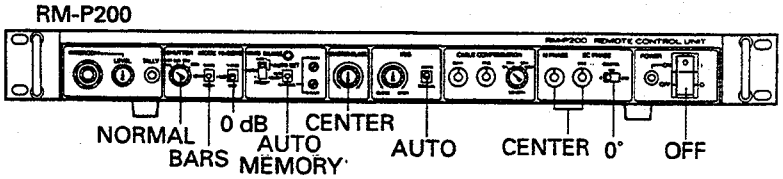


(FACTORY SETTINGS)

Camera control includes:
- Shutter speed
- Camera / Bars
- Gain
- Automatic White Balance
- Manual White Balance with Red Gain and Blue Gain
- Return Video
- Black Balance / Auto Set
- Master Black level
- Iris, Manual and Auto

Genlock functions, Loop through Reference video connection as well as SC phase and H phase adjustment are all possible from the remote unit with controls located on the front panel.

Two composite video outputs are provided, as well as a choice of either RGB, Component or Y/C output.

These basic functions are controlled completely by the serial data connection to and from the camera.

Other advanced functions such as LOLUX or Full Auto Shooting, Full Time Auto White, Variable Scan and others are not controlled.

Please check with the RM-P200 manual for further operating instructions.

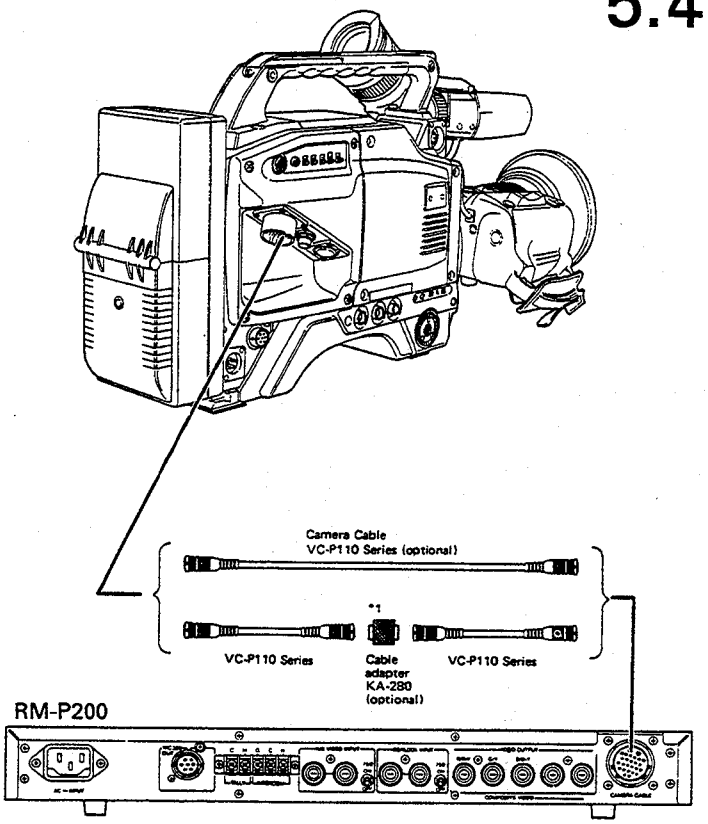


**Accessories:**
- VC-P110 series cables
- 5m, 20m, 50m, 100m
- KA-280 cable adapter (for extension)
- KA-300 headset

## 5.4.3 RM-P300 and RM-LP821

The RM-P300 Camera control unit can be extended up to 300 Meters (984 feet) from the camera.

In addition to all the basic functions of the RM-P200, the RM-P300 adds comprehensive front panel warnings.

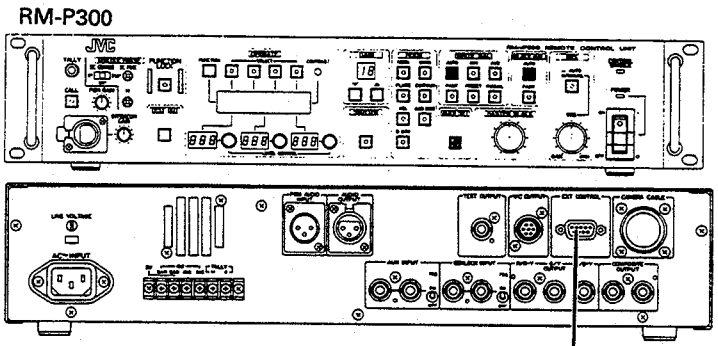


Additional advanced functions:
- Manual Black balance (Paint)
- (with Red Gain and Blue Gain)
- Contour control
- Function Lock
- Call tally function
- External control through RS-232
- 4 wire intercom

The RM-LP821 Remote Unit allows control of the important variables remotely from the rack unit, including a master fader for the IRIS and pedestal.

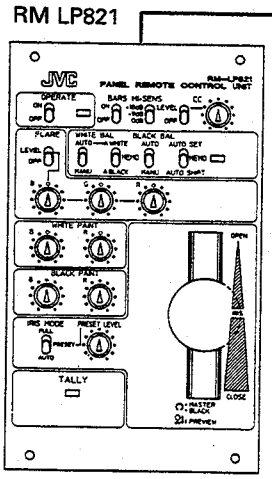


Accessories:
- VC-P110 Series Cable
- 5m, 20m, 50m, 100m
- KA-280 Cable Adapter (for extension)
- RM-LP821 Panel Remote Control
- KA-310 Head Set

# 5.5 RM-LP80 LOCAL REMOTE AND COMPUTER CCU CONTROL

The KY-27 can be remotely controlled by the standalone RM-LP80 control unit and by Computers such as IBM through the RS-232C cable or Macintosh through the Macintosh cable.

## 5.5.1 RM-LP80 Connection

The connection with the camera is through the six pin connector on the camera head. A 5 meter cable is supplied with the RM-LP80.

## 5.5.2 Remote Operation

To configure the camera for the RM-LP80 set the Iris Mode switch on the lens to Auto.

## 5.5.3 Controls

*1* Set the **Operate Switch** on the RM-LP80 to ON to use.

*2* **VTR (Trigger)**
The VTR trigger functions as the two triggers located on the camera. All triggers are active.

*3* **HI-SENS**
The RM-LP80 can only engage the basic settings of 0, +9, and +18 dB Gain with the HI-SENS switch.

*4* **TEST OUT SELECT**
This knob has no function

*5* **BARS**
The BARS ON/OFF switch selects BARS in the ON position and Video in the OFF position.

*6* **AUTO SET**
Auto Set engages the AUTO SET White Balance/Black Balance function. Black Balance only is performed if the Camera is in Preset White Balance or Full Time Auto White.
The Auto shift position has no function.

*7* **AUTO WHITE**
Auto White engages the White Balance function The Auto Black position has no function.

*8* **AUTO/MANU**
The AUTO switch position activates the White Balance Memory 1 position.
The MANU position activates the Manual Blue Gain and Red Gain Paint Knobs for White Balance.

*9* **IRIS**
The AUTO position activates the Automatic Iris according to the Camera Iris Set-Up Mode. The Manual position activates the Iris Manual control knob.

*10* **MASTER BLACK**
The Master Black control knob takes priority over the Camera Set-Up configuration.

## 5.5.4 COMPUTER CCU CONTROL

The computer control cables and software can control the same features as the RM-LP80.
Additional features include Shutter speed and Contour (Detail) on/off.
Please check with your dealer for the proper cables and software. RS-232C and Macintosh cables are available.

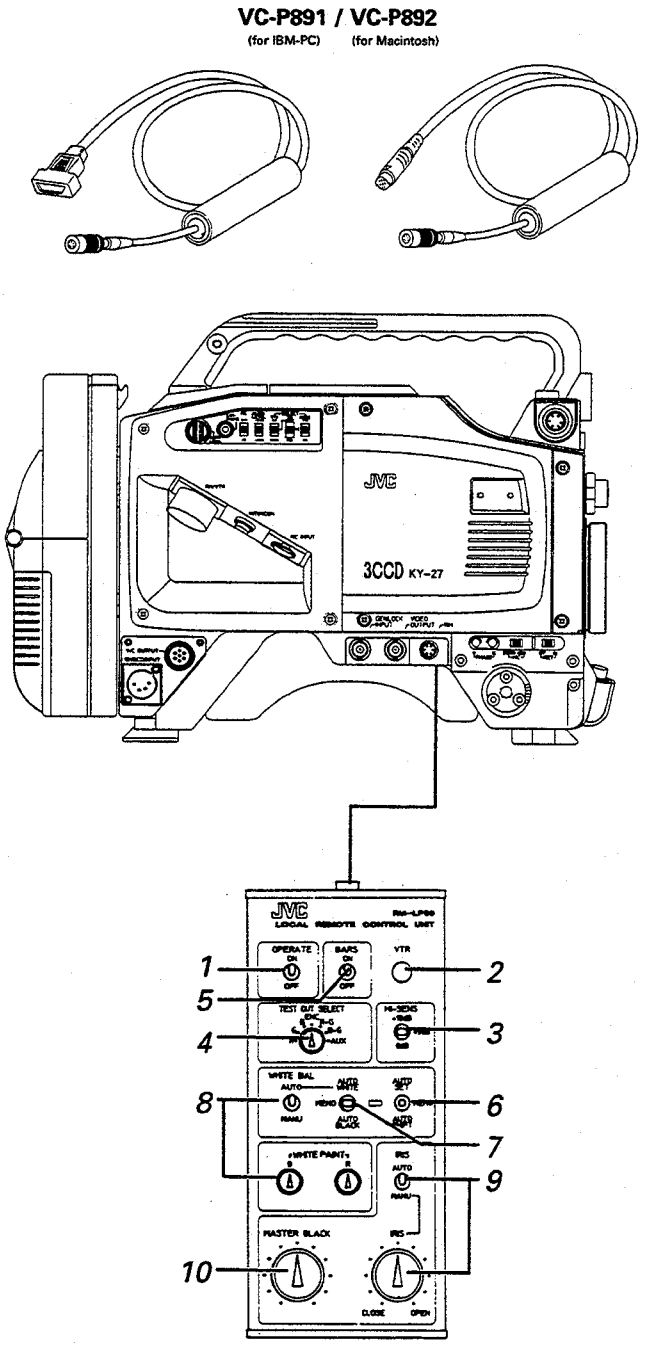

# INSTALLATION AND PREPARATION 6

## KA-27 CAMERA ADAPTOR 6.1

*1* The KY-27 is supplied disconnected from the KA-27 adapter.
The first step is to remove the VTR Mounting Bracket that is used for some docking VTRs.
There are 2 screws holding the bracket in place.

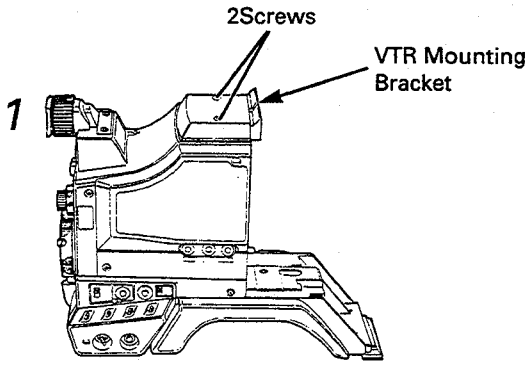


*2* Next slide the KA-27 on to the back of the KY-27, engaging the 50 pin parallel connector.

*3* Use Screw A to lock the KA-27 to the shoulder rest mount.

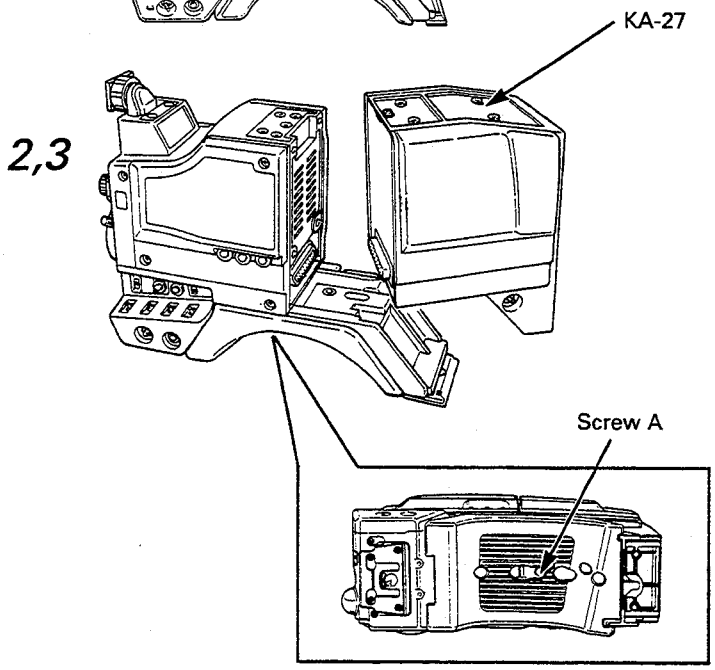


*4* The KA-27 is supplied with a mounting bracket to replace the VTR mounting Bracket. This is held in place with 2 screws.

*5* The last step is to mount the Handle to the Viewfinder post and the KA-27. The Handle is secured with 4 screws.

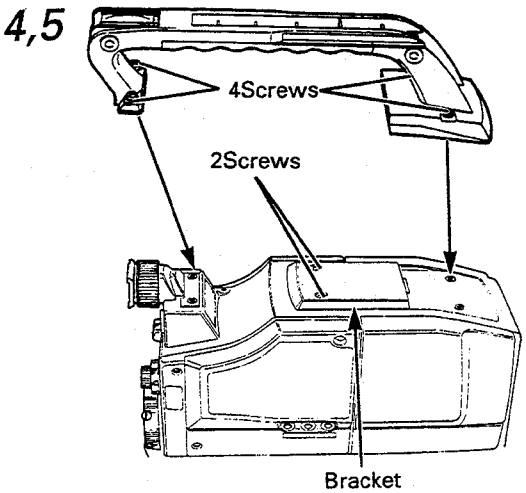

# 6.2 DOCKABLE VTRS

## 6.2.1 BR-S411 VTR attachment

The BR-S411 is attached using the same principle as the KA-27 adapter, with two exceptions.

1. The VTR Mounting Bracket should not be removed
2. The KA-232 Carrying Handle is optional and must be ordered separately.

*1* Remove the Standalone adapter from the BR-S411.

*2* First slide the BR-S411 on to the back of the KY-27, engaging the guide pin and the 50 pin parallel connector.

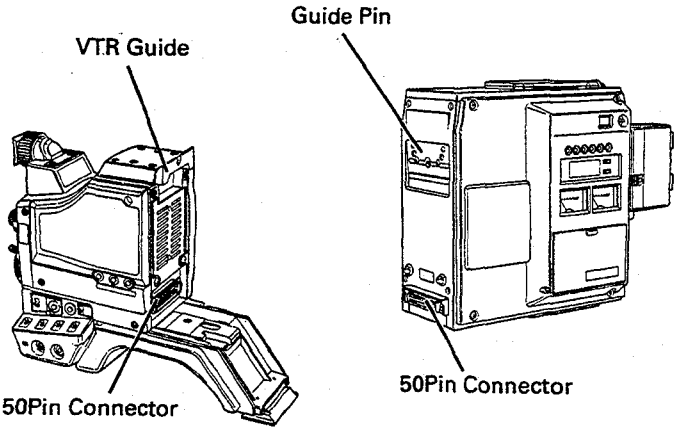


*3* Use Screw A to lock the BR-S411 to the shoulder rest mount.

*4* The last step is to mount the Handle to the Viewfinder post and the BR-S411. 4 screws secure the Handle to the camera and 2 screws secure the handle to the deck.

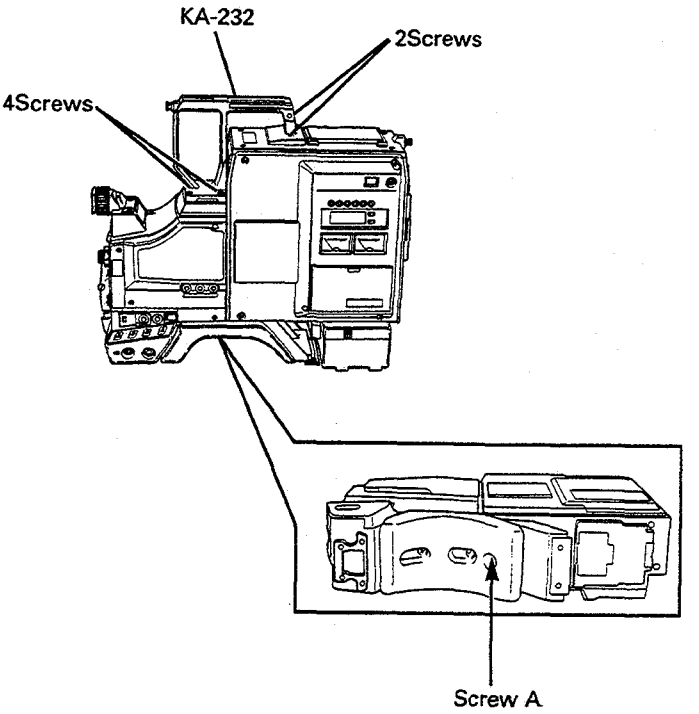


## 6.2.2 BR-S420C VTR attachment

Docking the BR-S420C is identical to the procedure form the BR-S411. (There is no standalone adapter for the BR-S420C).

The handle is included with the BR-S420C.

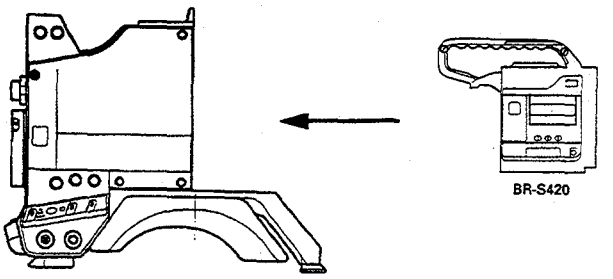

## 6.2.3 MII VTR attachment

To dock with the KR-M260 or KR-M240 type VTR, an adapter kit is needed. The KA-M20 VTR adapter includes an adapter plate and the proper handle.
The VTR Mounting Bracket need not be removed.

**Docking with KR - M 260 or KR - M240**

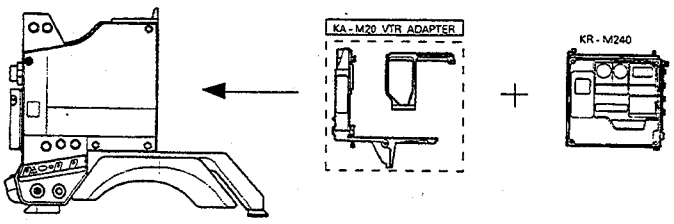


## 6.2.4 Betacam® SP VTR attachment KA-B20

To dock with Broadcast Betacam SP decks such as a BVV-5, the KA-B20 VTR adapter kit is required.
This includes the handle and adapter plate.
The VTR Mounting Bracket should not be removed.

**Docking with Betacam SP.**

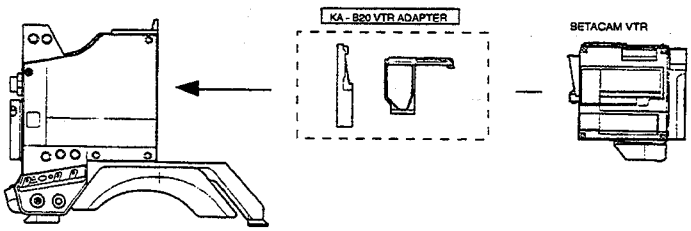


## 6.2.6 Betacam® Professional/Hi8 VTR attachment KA-P20

Refer to the KA-P20's service manual No. 60058.

Batacam Professional decks and Hi8 decks such as the EVV-9000 can be mounted in the field using the KA-P20 adapter kit.
This includes the adapter plate and the handle.
The VTR Mounting Bracket should not be removed.

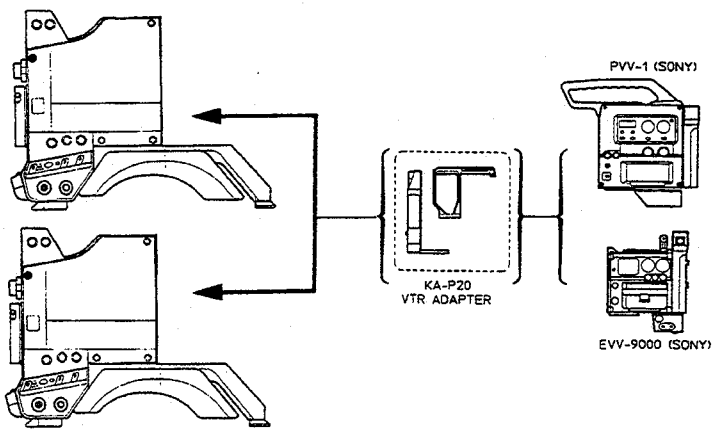

• Refer to the section 3.10 item 6 "Dynamic shading adjustment" on page 3-16.

# 6.3 LENS ATTACHMENT

1 Remove the mount cap. Be careful there is no dust left inside the mount.

2 Align the groove in the mount with the guide pin on the lens. Turn the mount ring clockwise so the lens is secured firmly on the lens mount.

3 Connect the lens cable to the camera head.

**Notes:**
- Be sure to tighten the lens completely, otherwise the back focus adjustment may be incorrect.
- When zoom lenses other than the specified optional lens A14 x 10 BRM12 are used, dynamic shading might occur at the upper and lower portions of the screen. Re-adjustment of the camera (charged) is necessary. Consult an authorized JVC Service Agent.
- It is recommended to read the instruction book of the lens carefully.

Note that the VTR Trigger switch of 8-pin lens is usually locked contact and of 12-pin lens is usually nonlocked.

In the Camera Set-Up menu a locked or nonlocked setting must be chosen.

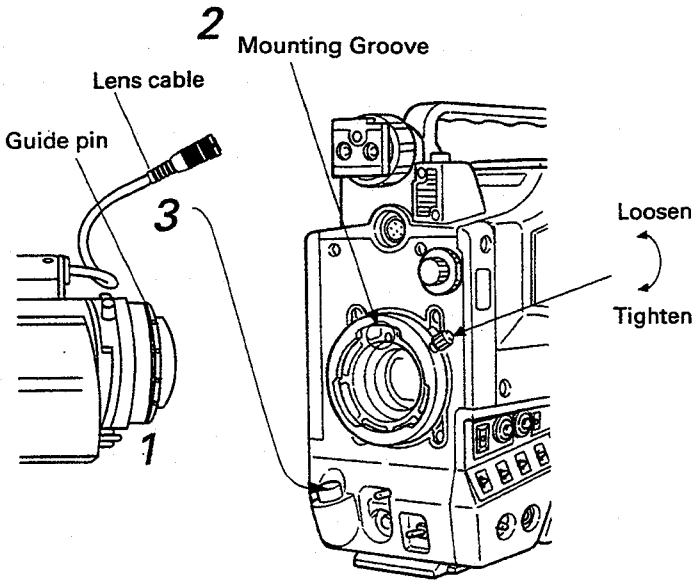


# 6.4 VIEWFINDER ATTACHING/ DETACHING

1 Loosen the stopper screw.

2 Attach the viewfinder with its guide aligned with the shoe.

3 Connect the cable.

4 Tighten the stopper screw.

5 Tighten the ring.

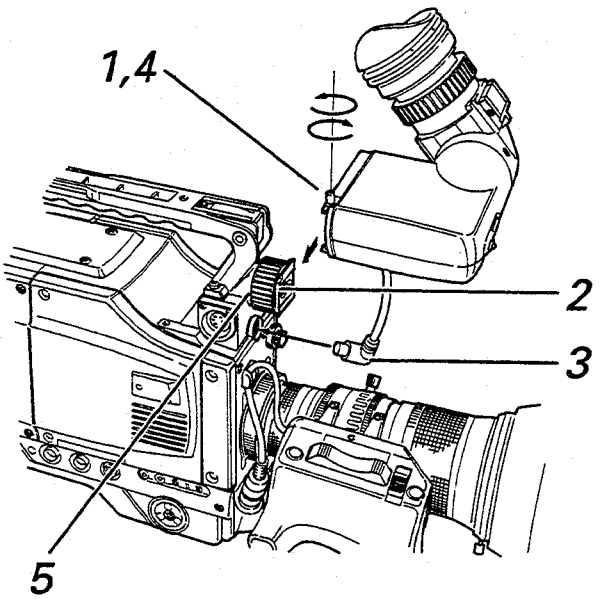

# MICROPHONE ATTACHMENT 6.5

**Attaching Microphone Holder**

The KY-27 camera comes with a standard Microphone Holder. This Holder can be used for JVC or other manufacturers microphones.

1 Attach the Microphone Holder using the three mounting screws.

2 Loosen the quick release clasp by turning the outside tightening knob.

3 Position the microphone in the holder. If it is a stereo microphone pay attention to the left and right orientation.

4 Use the inside and outside tightening knobs to adjust for the diameter of the microphone.
If the microphone does not fit, it is necessary to connect to the camera using a Shock Mount with the mounting shoe on the camera handle. These are available from various microphone manufacturers.

5 Shut the holder and tighten until firm.

6 Set the microphone Stereo or Mono switch on this side of the camera for the desired recording signal.

**WARNING!**
With a portable deck the Left Stereo signal will be recorded only, unless the select switch is set to mono.
With a mono microphone in the stereo mode, only the left audio channel of the Docked VTR will be recorded.

7 Be sure to match the KA-27 audio output level to the portable VTR required input level.

8 Set the KA-27 Camera Adapter Mic input switch.
CAM: The 6 pin input on the camera head
AD: The Unbalanced 3pin XLR input on the adapter.

**JVC MV-P612 STEREO microphone (Optional)**

The JVC MV-P612 Stereo microphone should be attached using the 6pin connector next to the Microphone Holder. Push to connect only.

**JVC M-K50, MV-P602 MONO microphones (Optional)**

These mono microphones should be removed from the included mounting adapter.
The optional VC-P740 microphone cable should be connected instead.
Attach the microphone suing the 6pin input connector. Push to connect only.

**Other Microphones**

All other microphones should be connected to the 3pin unbalanced input on the KA-27 adapter, or directly to the inputs of the Docked deck.

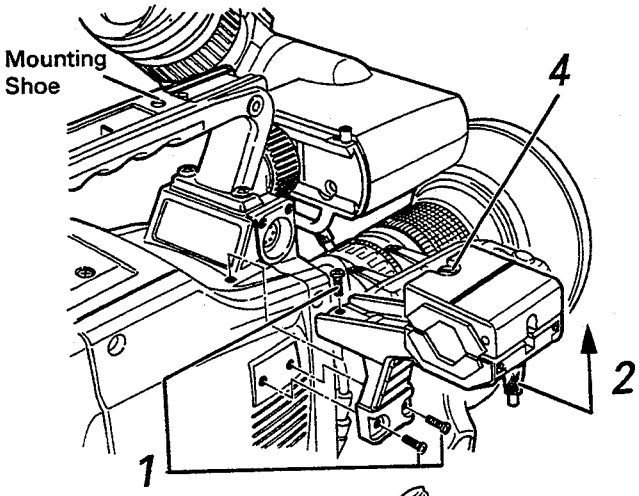


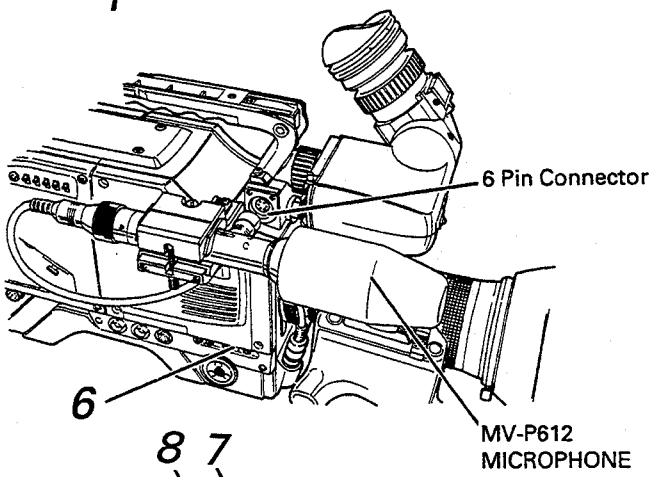


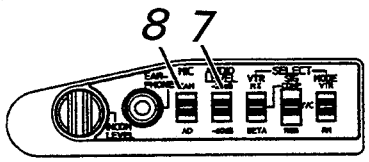


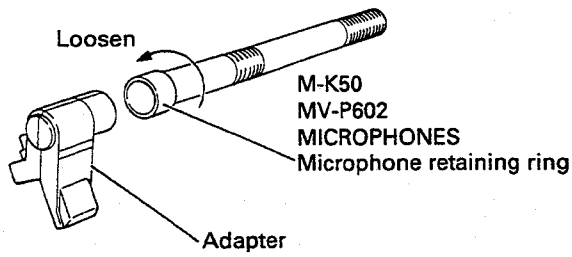


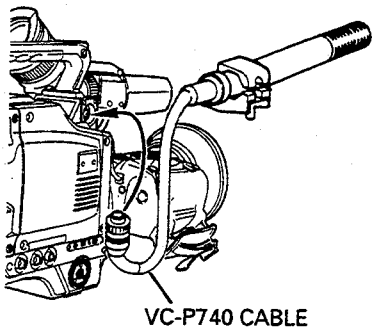

# 6.6 OPTIONAL STUDIO VIEWFINDER VF-P400

The studio viewfinder can be attached and powerd with the same viewfinder connection as the standard ENG viewfinder.

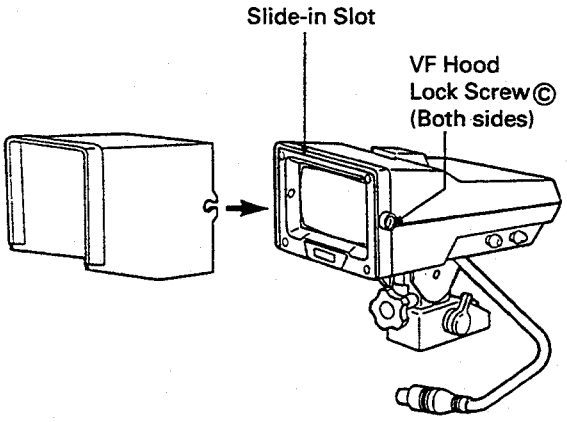


Mount the Viewfinder on the rear of the carrying handle using the slide bracket.
See the VF-P400 manual for further instructions.

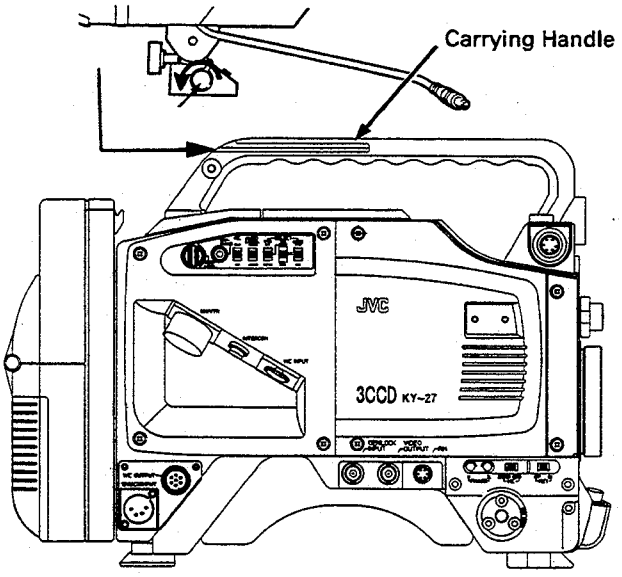


# 6.7 STUDIO KIT ATTACHMENT

Studio controls for tripod use with the lens used with this camera are available from JVC or from the Lens manufacturer.
These mount directly to the lens and include control over Servo Zoom, Mechanical focus and trigger functions.
The RM-LP80 remote unit can also be use for tripod control of trigger and camera set-up functions.

# SPECIFICATIONS AND ACCESSORIES 7

## SPECIFICATIONS 7.1

Optical system: F1.4 prism

Pick up Device: 2/3" IT 3CCD with on chip lens

Picture Elements

| | |
|---|---|
| U version | 728H x 493V<br>360,000 active pixels |
| E version | 728H x 581V<br>430,000 active pixels |

Lens Mount: 2/3" Bayonet

Sensing area: 8.8mm x 6.6mm (2/3" equiv)

Encoder

| | |
|---|---|
| U version | R-Y, B-Y 1.3 MHz |
| E version | PAL U, V ecoder |

Scanning system: 2:1 Interlaced,

| | |
|---|---|
| U version | 525 lines, 60 fields/sec. |
| E version | 625 lines, 50 fields/sec. |

| | U version | E version |
|---|---|---|
| Horiz frequency | 15.734 kHz | 15.625 kHz |
| Vertical frequency | 59.94 kHz | 50 Hz |

Synchronization: External, Internal

Color filter:
1. 3200 degrees Kelvin (neutral)
2. 5600 K
3. 5600 K + 1/16ND
4. Cross Effect 3200 K

Sensitivity: F8 at 2000 lux, 0dB gain

Minimum Standard Illumination: 7.5 lux with F1.4, +18 dB gain

LOLUX Minimum Illumination: 2 lux with F1.4, +30 dB gain

Signal to Noise Ratio (Typical)

| | |
|---|---|
| U version | 62 dB |
| E version | 60 dB |

Resolution
Y channel: 750 Horizontal Lines
RGB channels: 540 Horizontal Lines

Registration: 0.05% or less (Without lens distortion)

Geometric Distortion: Below measurable level

Color Bars

| | |
|---|---|
| U version | SMPTE type |
| E version | Full Field |

Gain Boost: 0,6,9,12,18,Variable gain in ALC

Shutter Speeds: 1/60*, 1/100*, 1/250, 1/500, 1/1000, 1/2000, Variable Shutter in ALC (*1/50, 1/120 for E version)

Variable Scan: 1/60.2 - 1/1966.7, 256STEPS

| | |
|---|---|
| U version | 1/60.2 - 1/1966.7, 256STEPS |
| E version | 1/50.0 - 1/1953.1, 305STEPS |

**OUTPUTS**

Composite: BNC, 26Pin
1 Vp-p/75 Ohm

Y/C: 7 Pin, 26 Pin
Y: 1 Vp-p/75 Ohm (with sync)
C:

| | |
|---|---|
| U version | 0.286 Vp-p/75 Ohm |
| E version | 0.3 Vp-p/75 Ohm |

Component: 26 Pin
Y: 1 Vp-p/75 Ohm
R-Y, B-Y:

| | MII position | BETACAM position |
|---|---|---|
| U version | 0.486 Vp-p | 0.7 Vp-p |
| E version | 0.525 Vp-p | 0.525 Vp-p |

Impedance = 75 Ohm

RGB: 26 Pin
0.7Vp-p/75 Ohm

Audio: 26 pin
-60dBm/-20dBm selectable
600 Ohm balanced

**INPUTS**

Genlock: BNC, 26 pin
VBS: 1 Vp-p/75 Ohm
BB:

| | | |
|---|---|---|
| U version | 0.43 Vp-p | 75 Ohm |
| E version | 0.45 Vp-p | 75 Ohm |

Return Video: 26 Pin, 50 pin docked
VBS 1 Vp-p/75 Ohm

Audio: Mic level JVC 6pin, XLR
JVC 6pin: -52dBm Unbalanced
9V power, Stereo/Mono
XLR: -60dBm (Balanced)

Voltage: 12V DC

Power (Typical): 12.4 Watts with camera adapter, Viewfinder.
11.9 Watts with viewfinder only.
9.6 Watts without adapter, Viewfinder.

Temperature Range: –10 to +45 degrees C, 14 to 104 degress F

Weight: 3.8 Kg with camera adapter and Viewfinder

# 7.2 DIMENSIONS [Unit: mm]

● KY-27 with KA-27 Camera Adapter and VF-P115 Viewfinder.

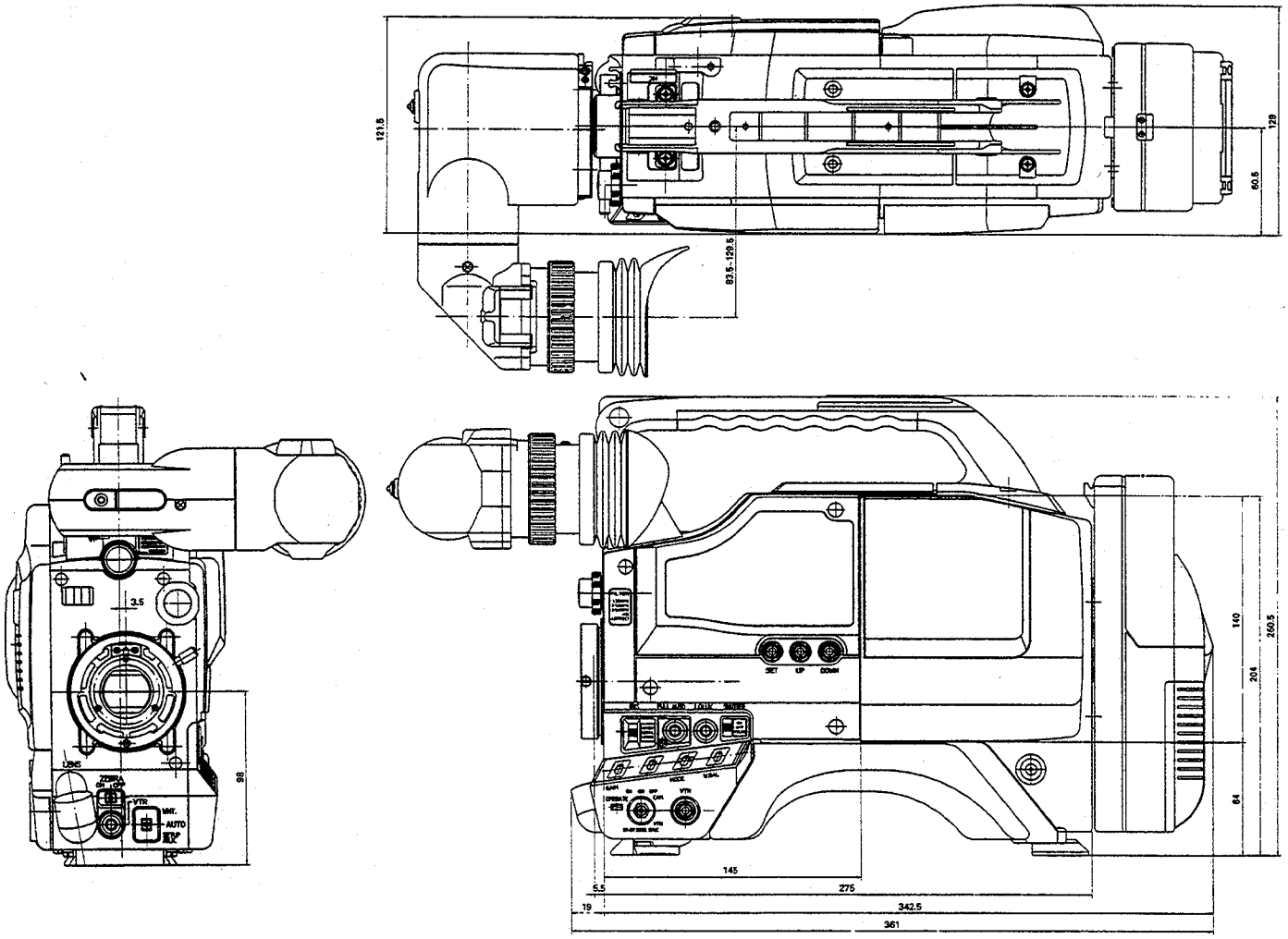


# 7.3 ACCESSORIES

**Standard Accessories**

| | |
|---|---|
| MIC holder | : KA-A27 |
| Tripod base | : KA-510 |
| Soft case | : (for U version) |
| Carrying Case | : CB-P27 (for E version) |

**Optional Accessories**

| | |
|---|---|
| Electronic viewfinder | : VF-P115 |
| Studio viewfinder | : VF-P400 |
| Power zoom lens | : Fujinon A14X10 BRM12 |
| AC power adapter | : AA-P250 |
| DC battery pack | : NB-G1 (12 V, 2.2 AH) |
| Chest rest | : KA-111 |
| Camera adapter | : KA-27 |
| Carring case | : CB-P27 (CB-P27 is standard accessory for E version) |
| VTR adapter | |
| for MII | : KA-M20 |
| for BETACAM SP | : KA-B20 |
| for BETACAM PRO and Hi-8 | : KA-P20 |

# ACCESSORIES SYSTEM CHART 7.4

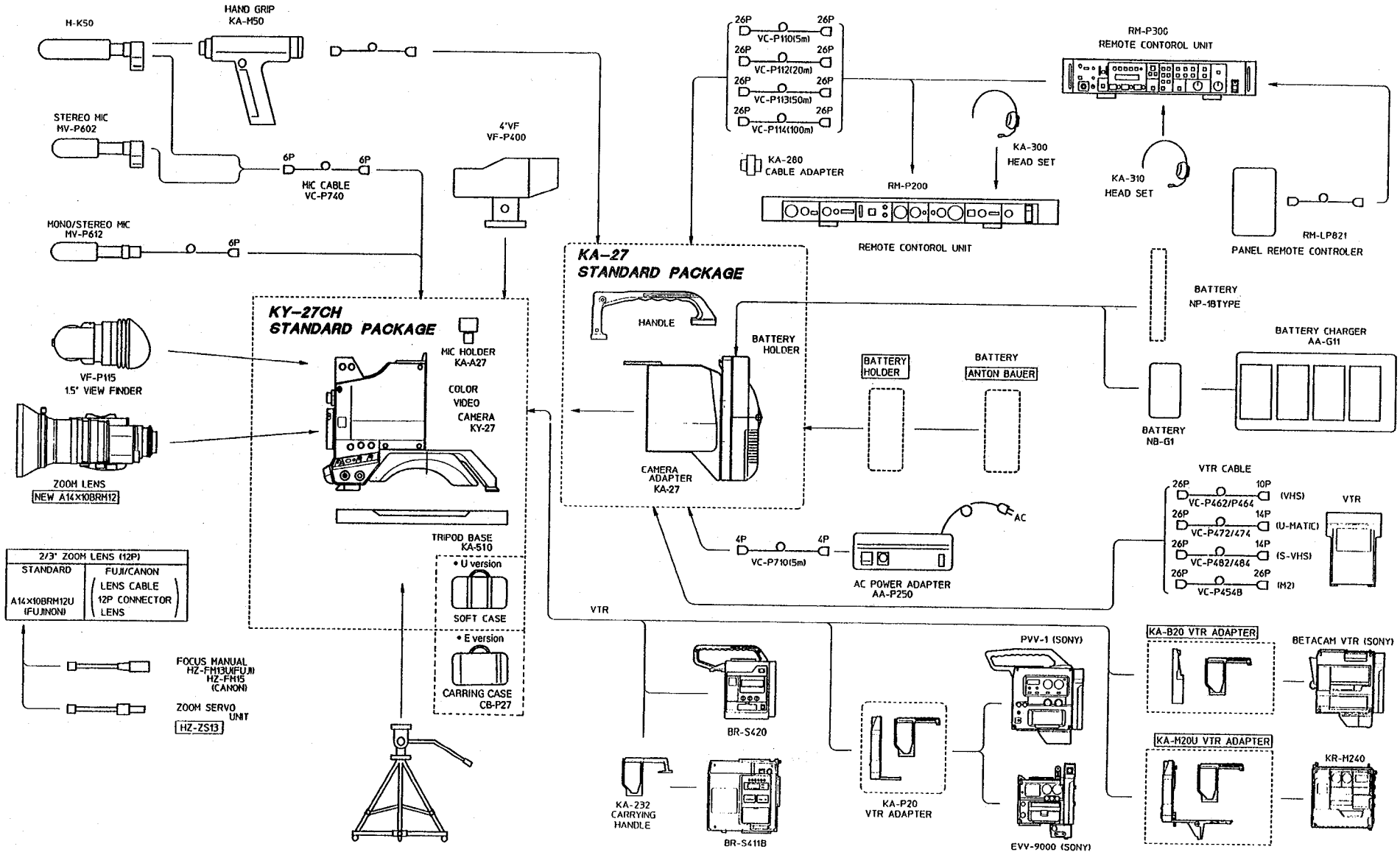

JVC

VICTOR COMPANY OF JAPAN, LIMITED

Printed in Japan
SC96557 (U version)
SC96558 (E version)

# SECTION 1
# NEW CIRCUITRY AND NEW TECHNOLOGY

## 1.1 LOLUX FUNCTION

The LOLUX function increases the camera sensitivity by 30 dB with newly devised method to read signals out of CCDs as well as to raise the gain of the video amp. This function provides the camera with a high efficient object illuminance of 2 lux at minimum. In the LOLUX mode, the varistors Q6, Q17 and Q26 of the video amp on the PR1 board increase the gain by 24 dB.

| Simultaneous signal readout of 2 pixels of CCD | Video amp's gain-up in PR1 board | → LOLUX |
|---|---|---|
| +6 dB | +24 dB | +30 dB |

For gain-up by the electrical circuit, it is hard to increase the dynamic range of the elements used in the amp as a whole, therefore, it is required to reduce signal level in the normal mode (without gain-up) in order to increase the gain for 18 dB or more. However, this method deteriorates the signal in the S/N ratio. The special method employed in this camera to read signal out of the CCD pixels realizes high gain while preventing signal from deterioration in the S/N ratio.
The following explains how signals are read out of pixels in the LOLUX mode.

### 1.1.1 Signal readout in normal mode (LOLUX off)

The IT (Interline Transfer) type CCD image sensor employed in the KY-27 camera vertically reads out electric charges stored in pixels (photodiodes) arranged on the chip by the lined V-CCDs (vertical transfer CCD) all together in the V. blanking period. Signal readout is shifted to the next line of V-CCDs in every H. period to write them onto the H-CCDs one after another. The H-CCDs transfer readout signals to the signal detection amplifier named FDA (Floating Diffusion Amplifier) on the chip to detect signals.
The FDA supplies signal charges to the internal microcapacitor and detects signal voltages at the both ends of the microcapacitor to read and output signals.

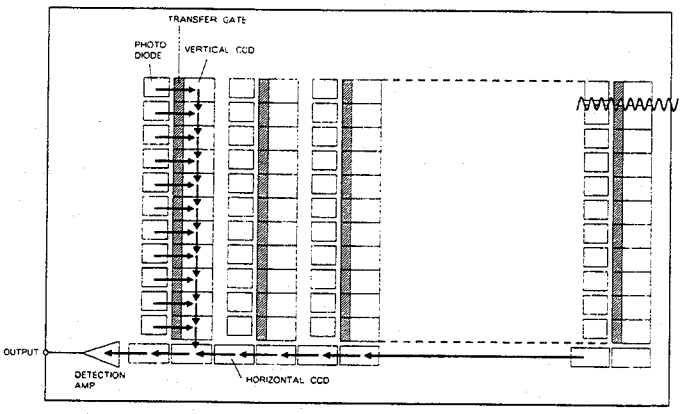


**Fig. 1-1**

**Reference: Operation of FDA**

The FDA which amplifies output signal of the CCD image sensor supplies electric charge sent from the H-CCDs to the charge detection capacitor, and voltages at the both ends of the capacitor are outputted as the signal level. This process requires to keep amount of charge stored in the capacitor constant befofe it receives charge from the H-CCDs. Therefore, the reset pulse is supplied to the charge detection capacitor to charge it with a certain reset voltage every time the H-CCD sends charge for a pixel. From the above reason, output signal of the FDA has an interrupted waveform to which the reset pulse is duplexed.

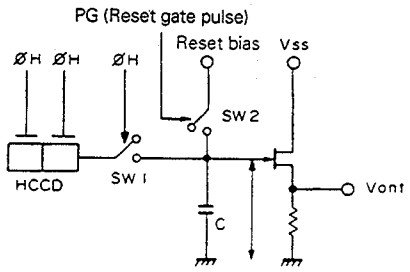


Floating Diffusion Amp.

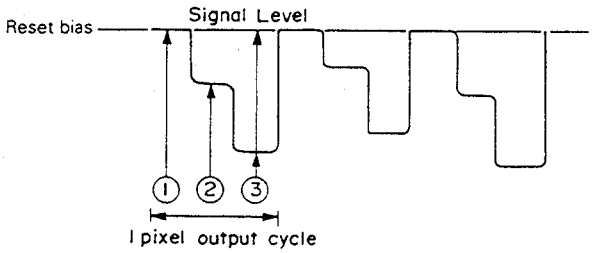


**Fig. 1-2** OUTPUT SIGNAL WAVEFORM OF CCD

See Fig. 1-2. The upper illustration shows the equivalent circuit of the FDA while the lower shows output signal waveform of the FDA.

1) SW2 shown in the figure is turned on by reset pulse supplied to the PG terminal and the capacitor C is charged to have the voltage of Reset bias. This state is shown as the timing ① in the output signal waveform.
2) Then, SW2 is turned off and the capacitor C enters the floating condition. This timing is shown by ② in the output signal waveform.
3) Drive pulse of the H-CCD gets the H-CCD to transfer charge for a pixel to the capacitor C, which is consequently discharged to be negative. This timing is shown by ③ in the output signal waveform.
   As reset pulse is supplied again, the charge detection capacitor C is charged with the reset voltage "Reset bias". Such the operation is repeated every time charge for a pixel is detected.

As mentioned above, the charge detection capacitor C of the FDA is charged with reset voltage every time signal charge is detected. In actual, however, signal charge is irregularly stored in the capacitor at the reset time, therefore, difference between signal level in the floating state ② and input level of the signal charge ③ is detected by the CDS circuit that will be explained later.

Interrupted signals outputted from the image sensor are processed by IC2 (correlating double sampling circuit) inside the IS board to become continuous video signal.

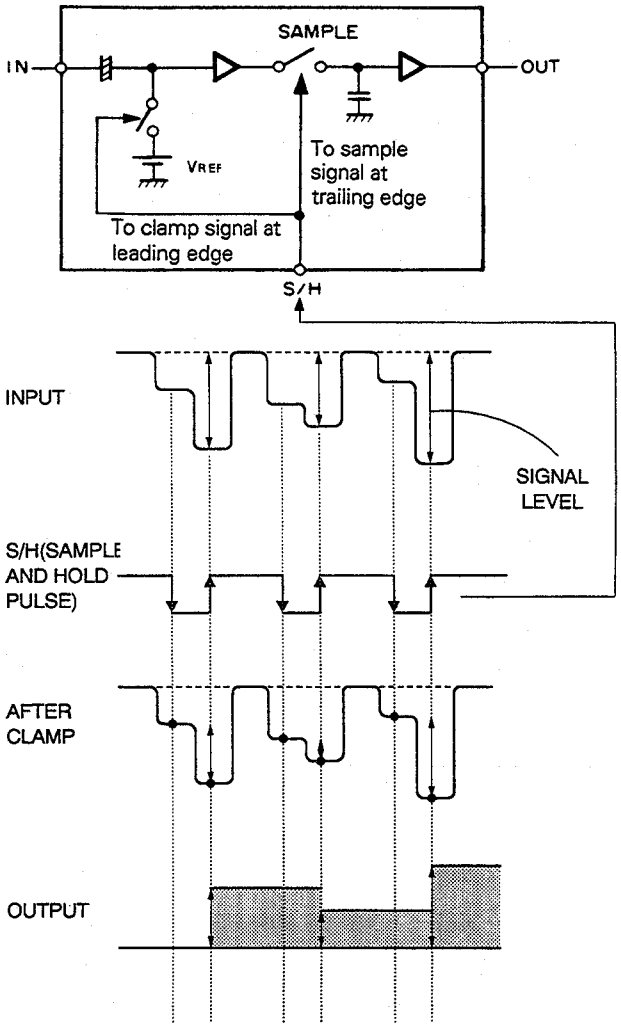


**Fig. 1-3**

### 1.1.2 LOLUX mode

In the normal mode the internal capacitor is reset every time the FDA detects charge for a pixel. On the other hand, in the LOLUX mode the reset operation is reduced half in the number of times in order to store signal charges of two pixels in the capacitor inside the FDA, and the output signal level becomes twice (6 dB) as high as in the normal mode. This is the principle of the LOLUX mode.

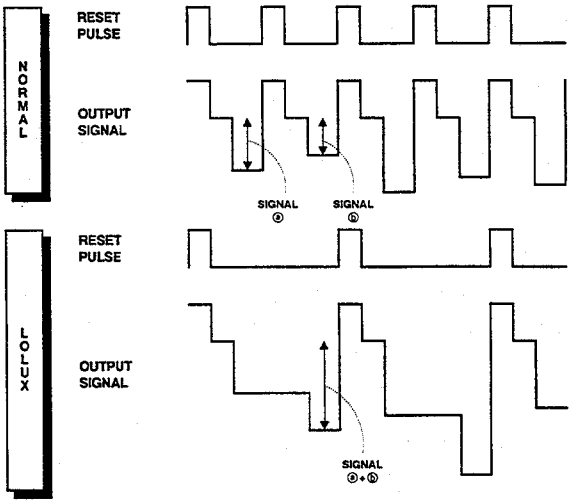


**Fig. 1-4**

The LOLUX mode requires to curtail not only the reset operation of the image sensor's FDA but also the operation of the correlating double sampling circuit. As a result the sensitivity is doubled in the LOLUX mode but the horizontal resolution declines by half.

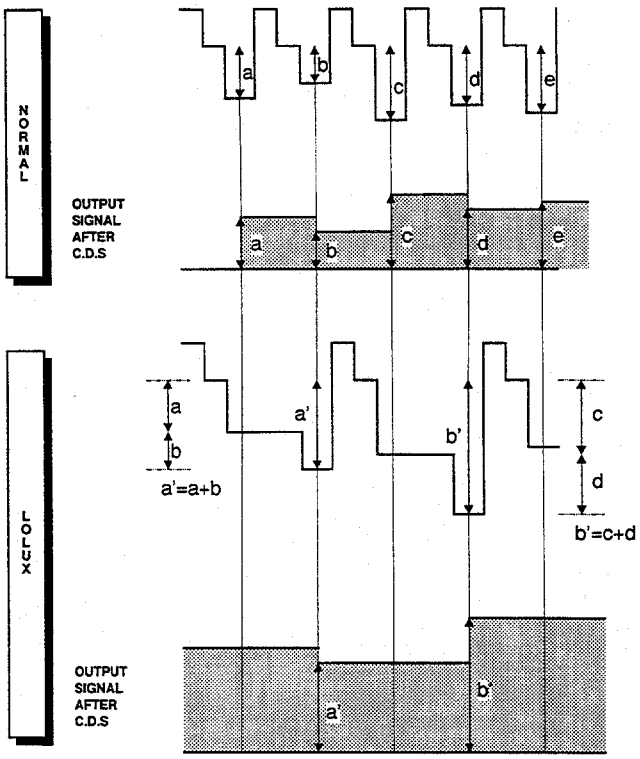


**Fig. 1-5**

### 1.1.3 Circuit operation in LOLUX mode

Pulses necessary for the LOLUX operation are generated by the DR2 board. (See Fig. 1-6.)

Master clock pulse generated in IC5 is once supplied to the DR1 board to adjust the phase, and it is returned to the DR2 board.

In the DR2 board the pulse is sent to pin 10 of IC3, which divides this pulse and outputs it through pin 12.

IC11 curtails the original pulse by half based on the divided pulse and the NOR of the original pulse, and outputs it to IC3. After the curtailed pulse is inverted in IC3, it is supplied to the ISB, ISG and ISR boards to function as the sample and hold pulse for correlating double sampling in the respective boards.

At the same time, this sample and hold pulse is again inverted in IC3 and supplied to IC12.

In IC12 the reset pulse øR that is used to reset the FDA of the CCD image sensor is curtailed by the sample and hold pulse. As a result, the reset operation of the FDA is curtailed by half (every other reset operation), and signal charges for horizontally neighboring two pixels are added to make the sensitivity double.

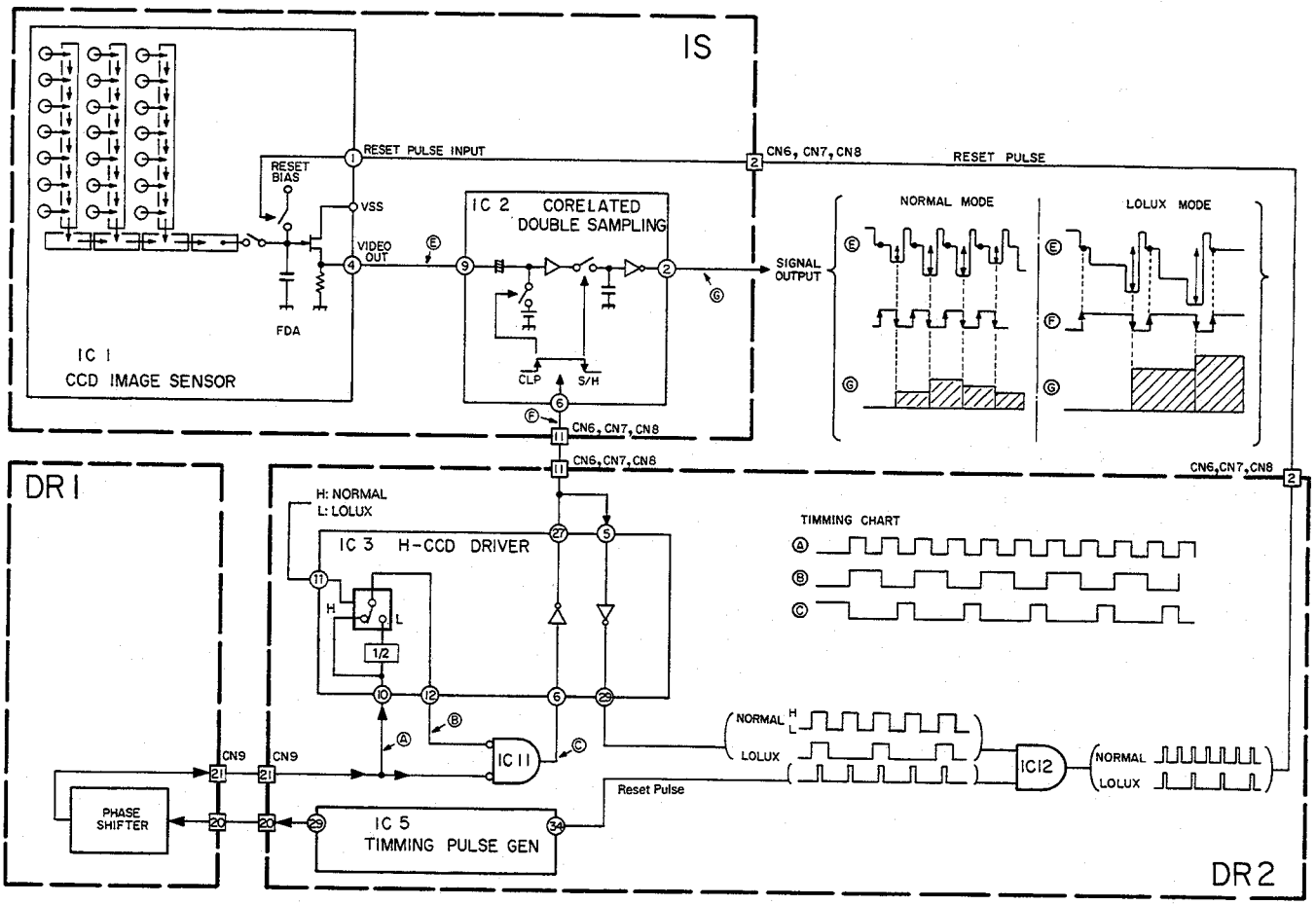


Fig. 1-6

## 1.2 VARIABLE SCAN (V. SCAN) FUNCTION

The VARIABLE SCAN function, with application of the function of the electronic shutter, removes white belts that appear in the picture when the screen of a monitor display having a different vertical scan rate is shot by the camera.

### 1.2.1 Cause of white belt occurrence and V. scan

When picture on a computer's display, etc. whose vertical scan frequency is higher than that of a video camera is shot, a part of the picture is picked up twice since the display begins the next scan in a scan period of the camera. Such a part is of course brighter than the other part and it appears as a white belt in the reproduced picture.

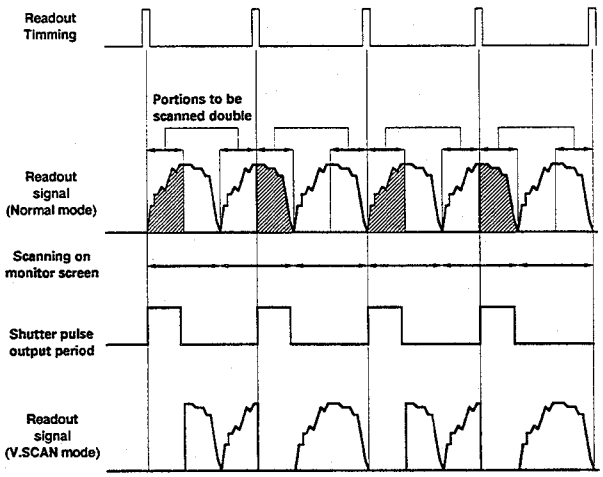


**Fig. 1-7**

In the V. SCAN mode the part to be scanned double is removed by the function of the electronic shutter, namely, the vertical scan rate of the display is matched with the camera's shutter speed to prevent occurrence of white belt.

### 1.2.2 Operation of electronic shutter

The structure of the CCD image sensor employed in this camera is the vertical overflow drain type. The CCD image sensor of this type can freely control the amount of signal charge to be stored in the pixel (photodiode) that takes charge of photoelectric conversion in the image sensor by the bias voltage named Vsub. When too much signal charges exceeding a certain amount regulated by Vsub bias voltage, the excees charges are vertically drained to the depth of the board.

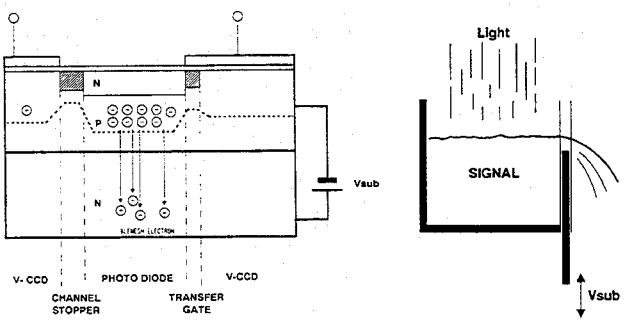


Cross section of a pixel of CCD image sensor

**Fig. 1-8**

The higher Vsub voltage is raised, the less the signal charge to be stored in the photodiode becomes, and nothing is stored at last. With utilization of this principle, the electronic shutter functions to store signal charge in the photodiode only for a required period.
See Fig. 1-9.
In usual, electric charge is accumulated in the photodiode until it is read out by the V-CCD in the V. blanking period, and the photodiode stores nothing of charge at that moment. In other words, the electronic shutter normally throws signal charge away from the photodiode by duplexing the high voltage shutter pulse to the Vsub voltage. When it is stopped to duplex the shutter pulse, the photodiode starts to store signal charge inside it and it continues until the charge is read out by the V-CCD at the timing of V. blanking period.
Therefore, the shutter speed is equivalent to the period from the time when the duplexing of the shutter pulse to the Vsub voltage is stopped to the time when stored charge is read out by the V-CCD.
The shutter speed can be controlled by changing the period of time to duplex the shutter pulse to the Vsub bias voltage.

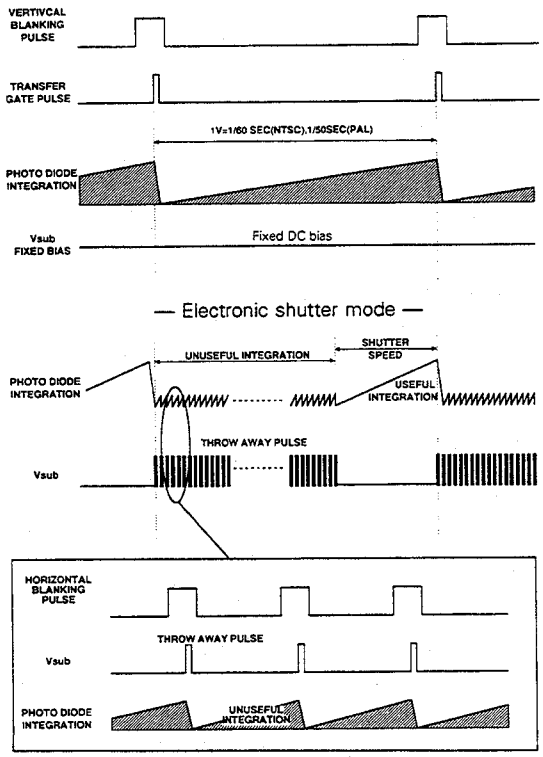


**Fig. 1-9**

### 1.2.3 Operation of VARIABLE SCAN

IC5 on the DR2 board is the timing pulse generator to control the period of time to duplex the shutter pulse to the Vsub voltage according to serial data supplied from the CPU to the pin 9 of IC5.
The shutter pulse is outputted from the pin 19 to be supplied to IC1, IC2 and IC3 on the DR1 board. These ICs generate the voltage higher than the normal Vsub bias voltage to mix it with the Vsub bias voltage for respective CCD image sensors. This pulse is outputted during the double scanned period that is shown in Fig. 1-7 to cancel storing signal charge in the period, and the white belt is accordingly removed.

## 1.3 BLOCK DIAGRAM

### 1.3.1 DR1 board block diagram

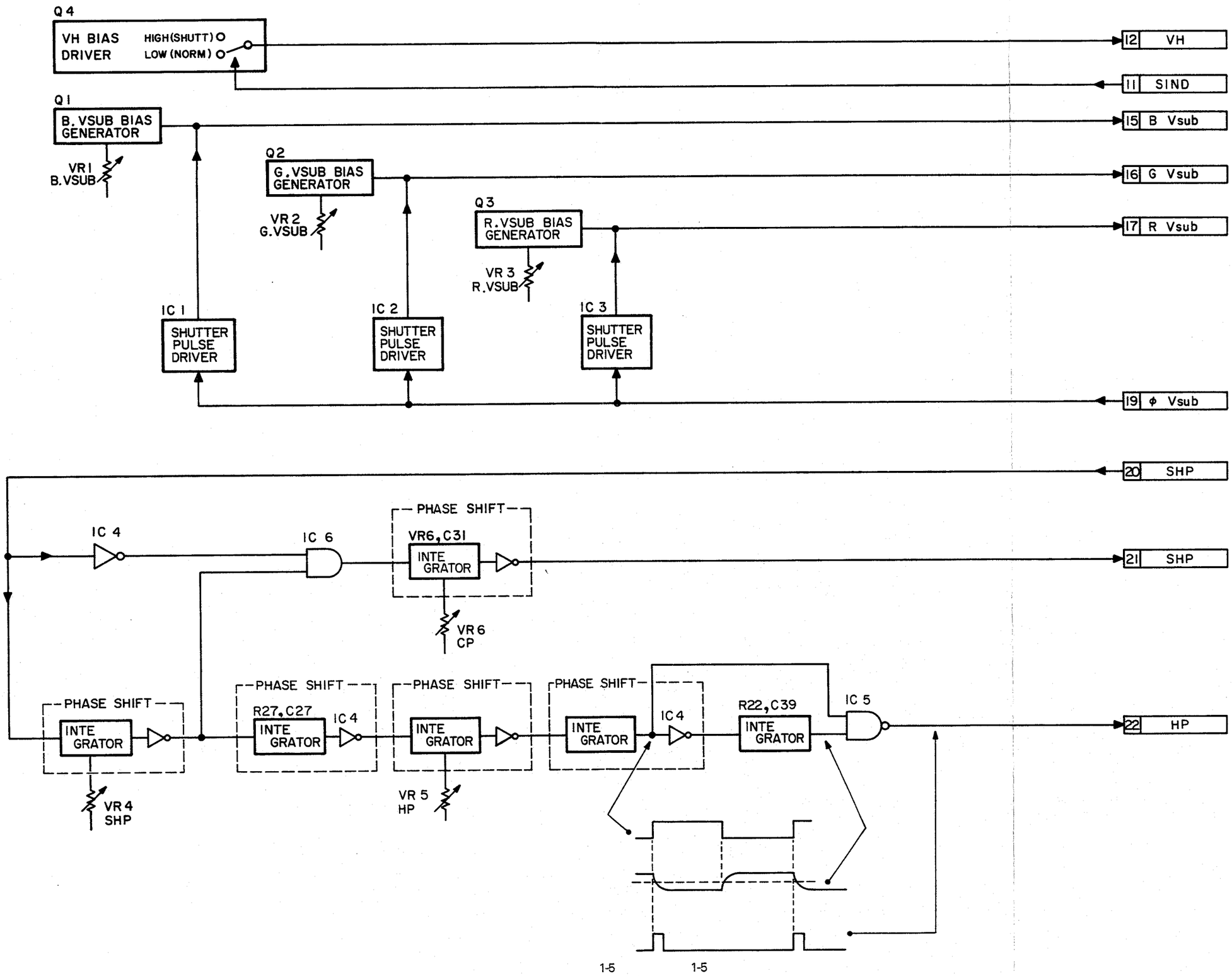

### 1.3.2 DR2 board block diagram

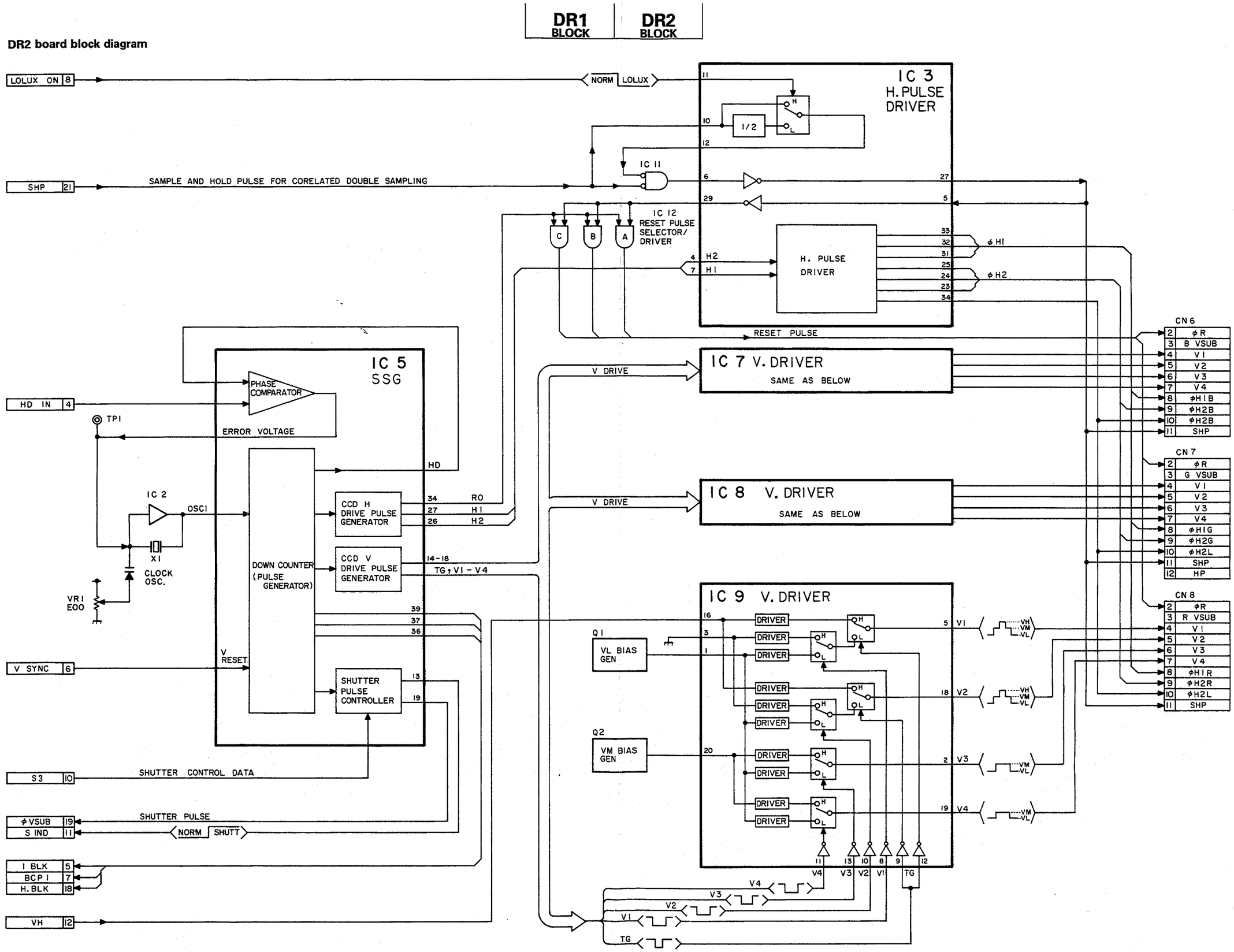

### 1.3.3 PA board block diagram

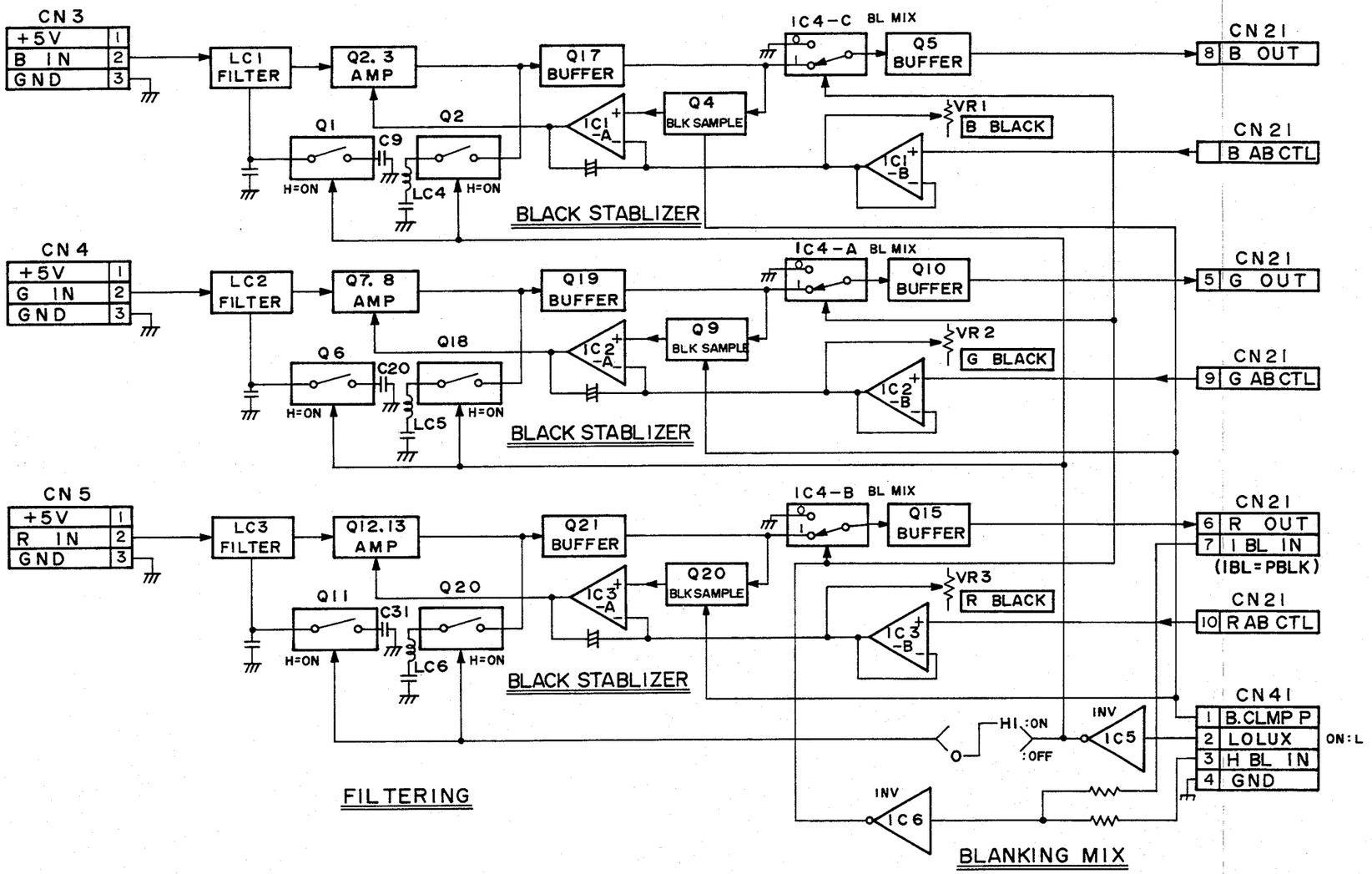




3

### 1.3.4 PR1 board block diagram

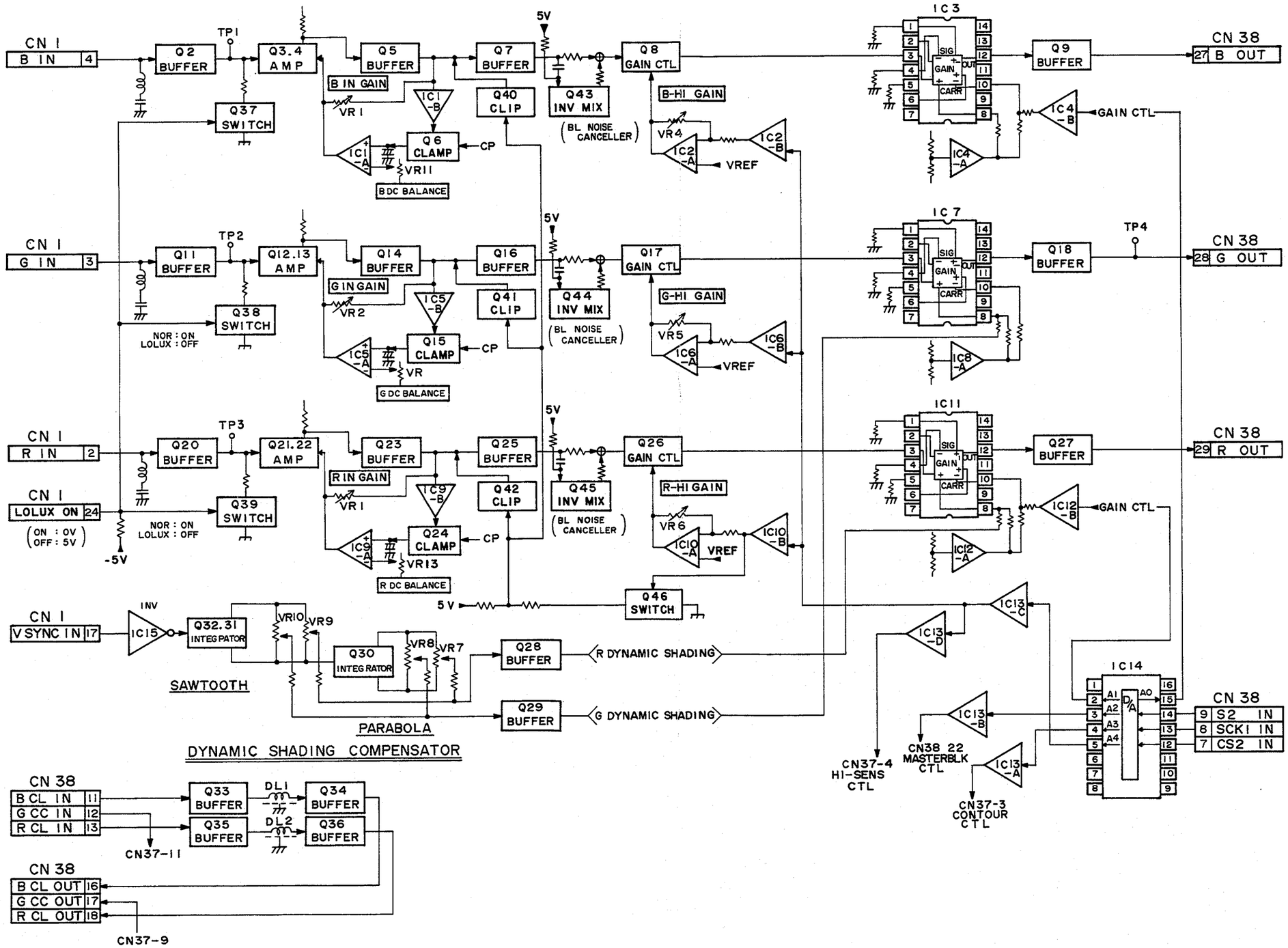

### 1.3.5 PR2 board block diagram

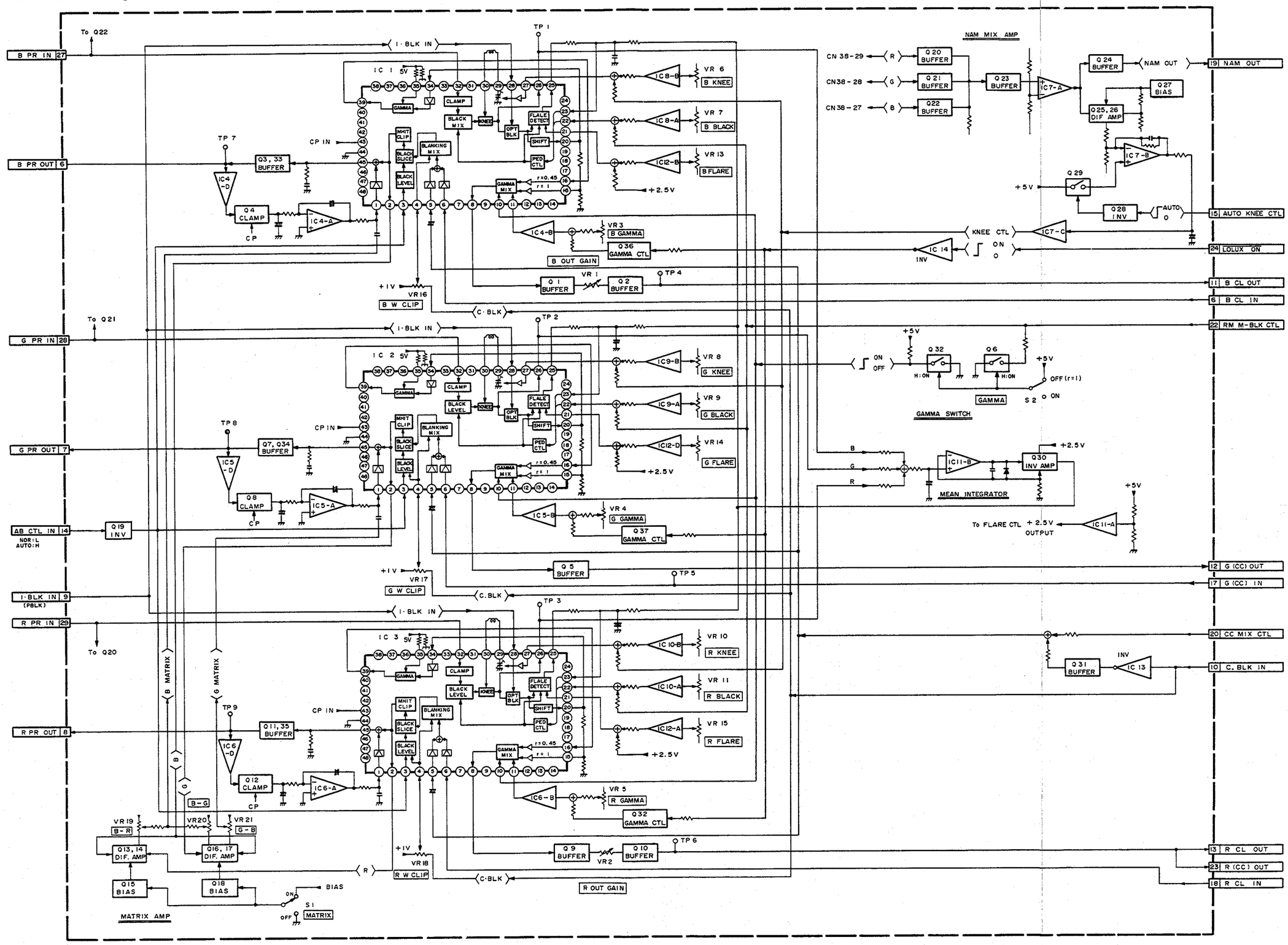

### 1.3.6 CC board block diagram

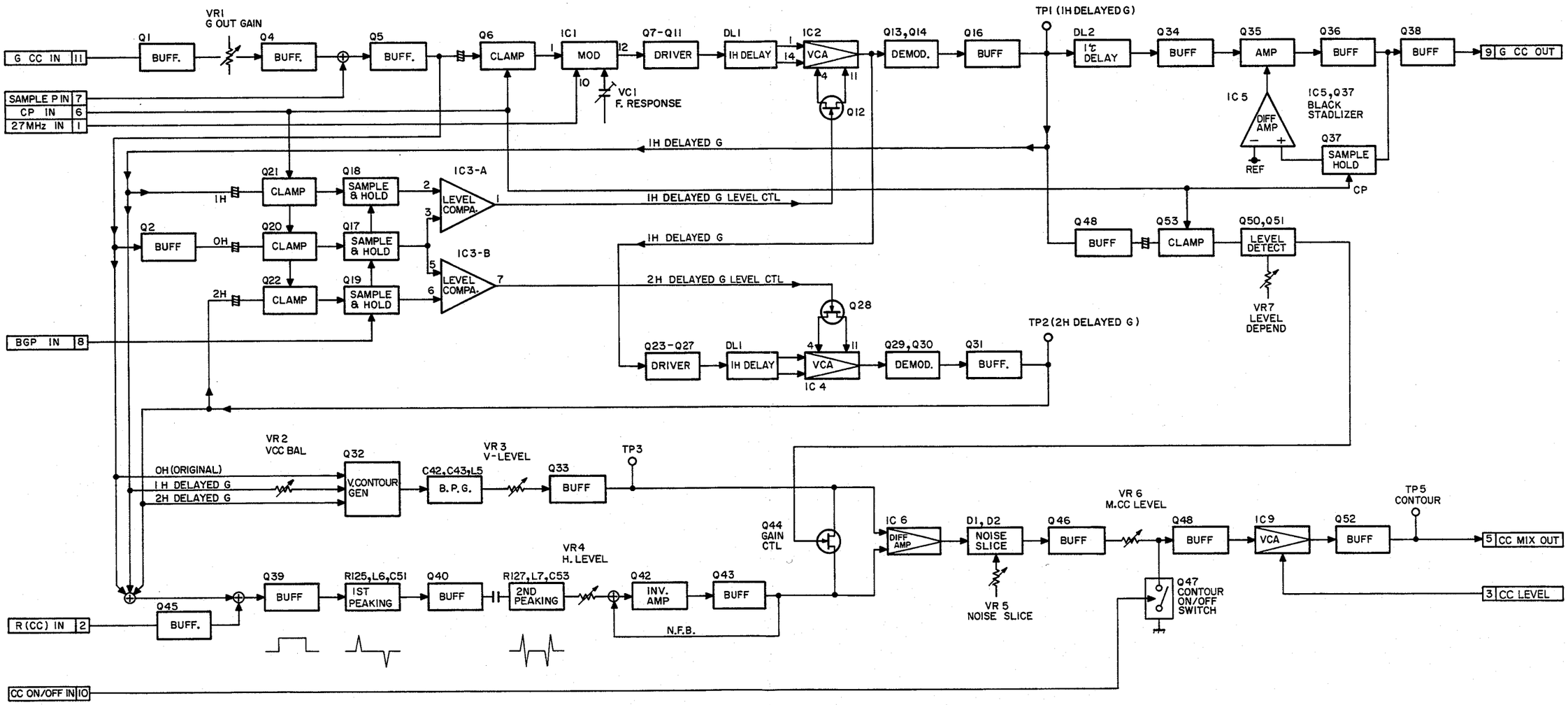

## 1.3.7 SE board block diagram

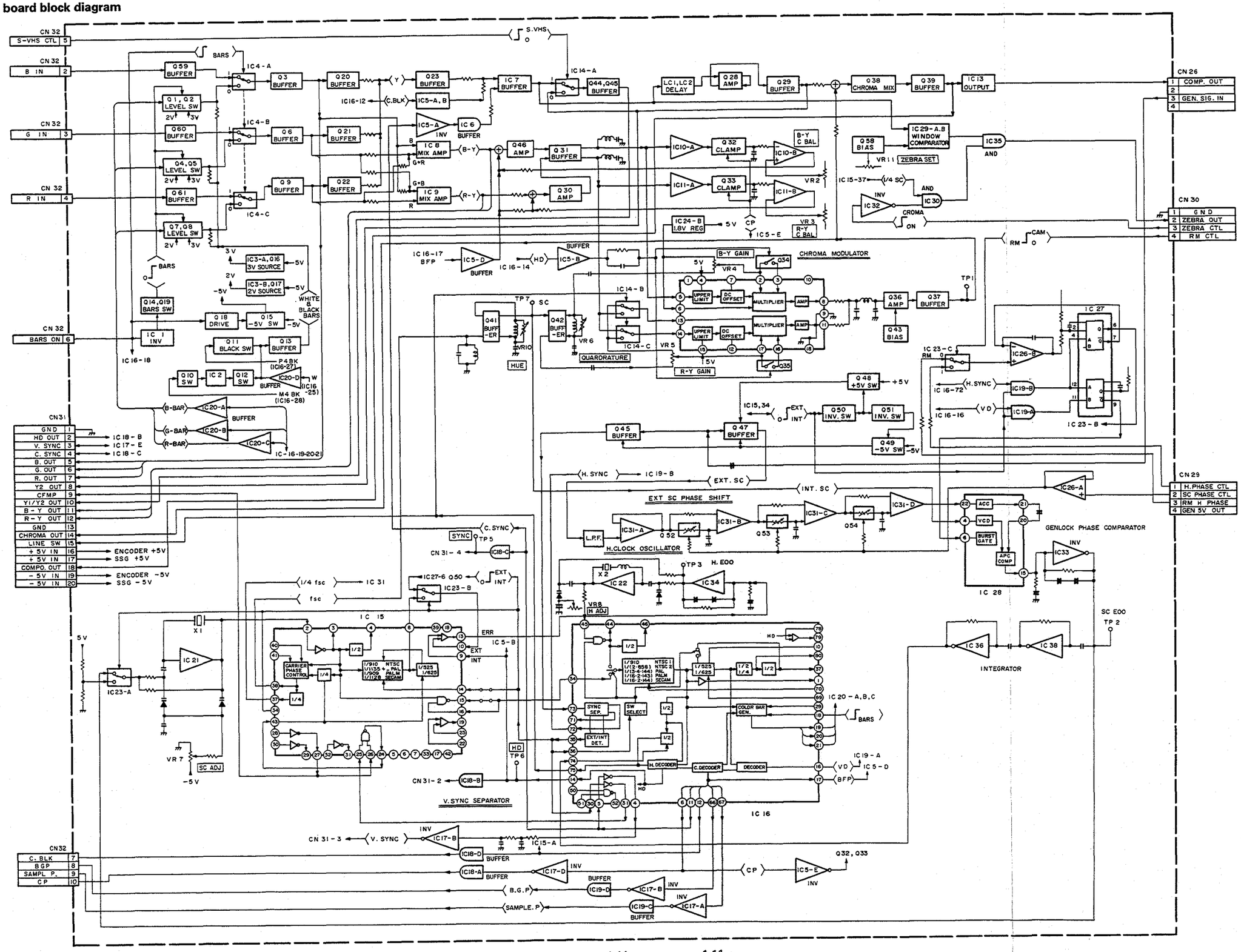



1-11

### 1.3.8 CP1/CP2 board block diagram

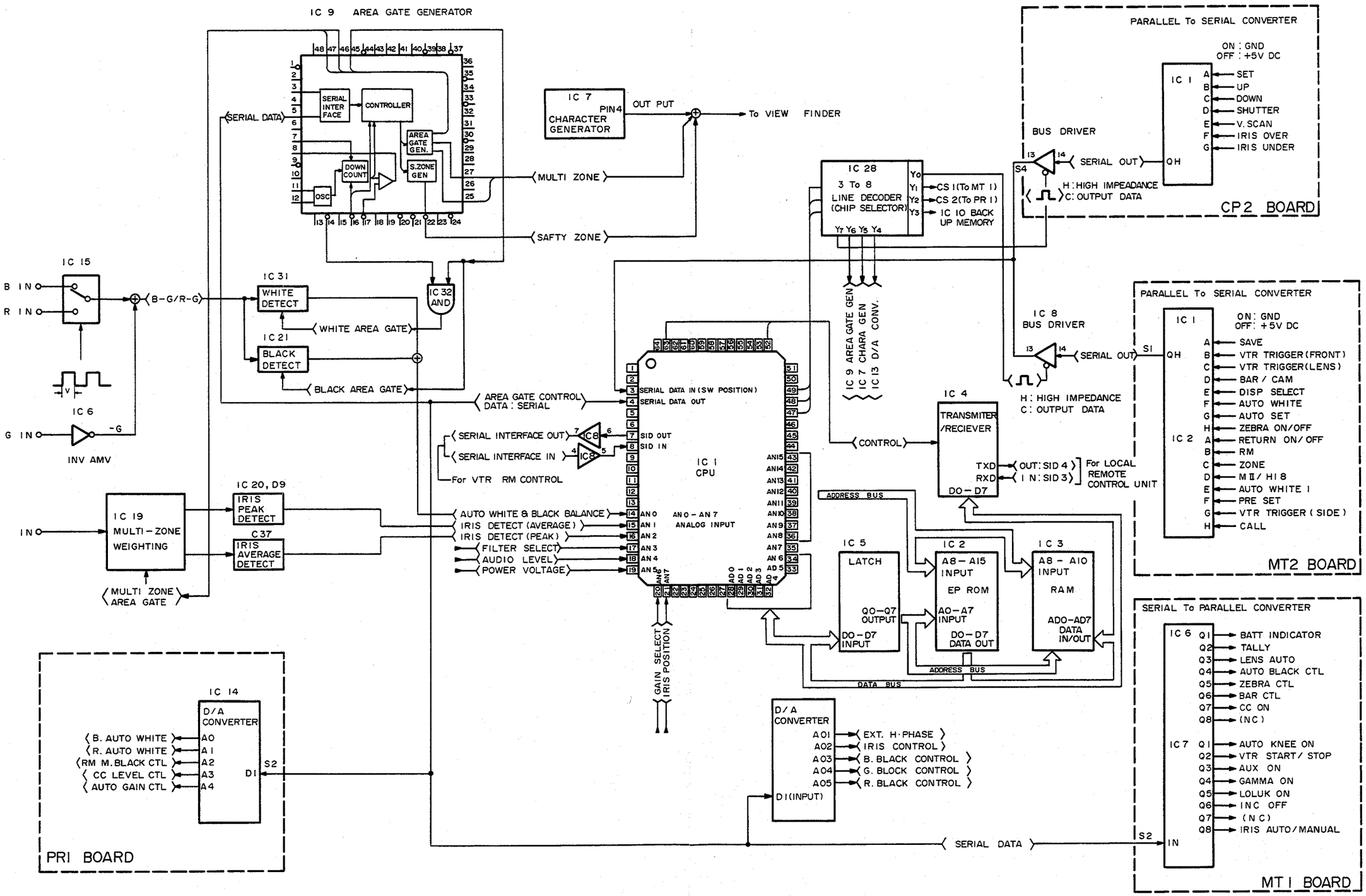



1-12

### 1.3.9 PS board block diagram

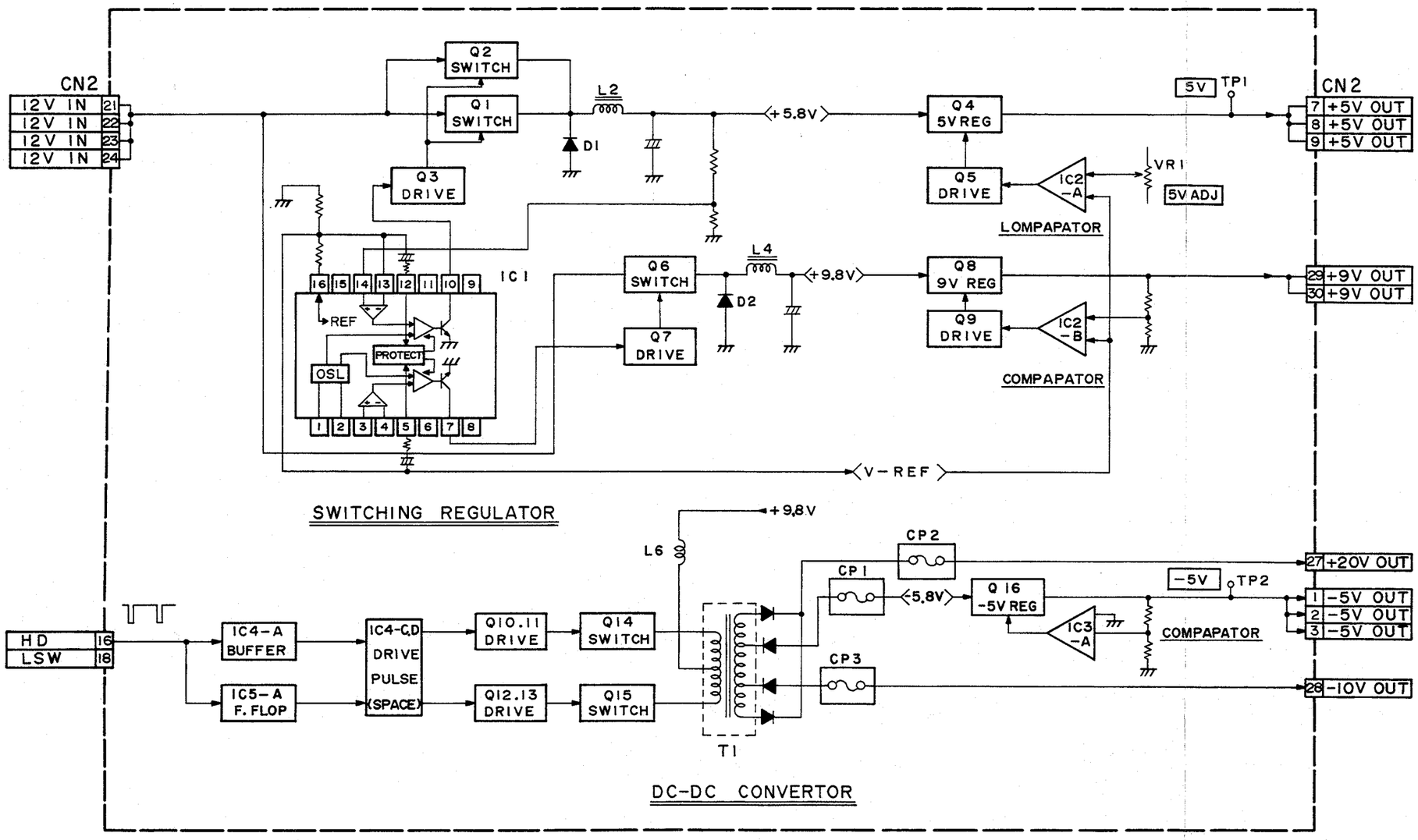

### 1.3.10 MT1 board block diagram

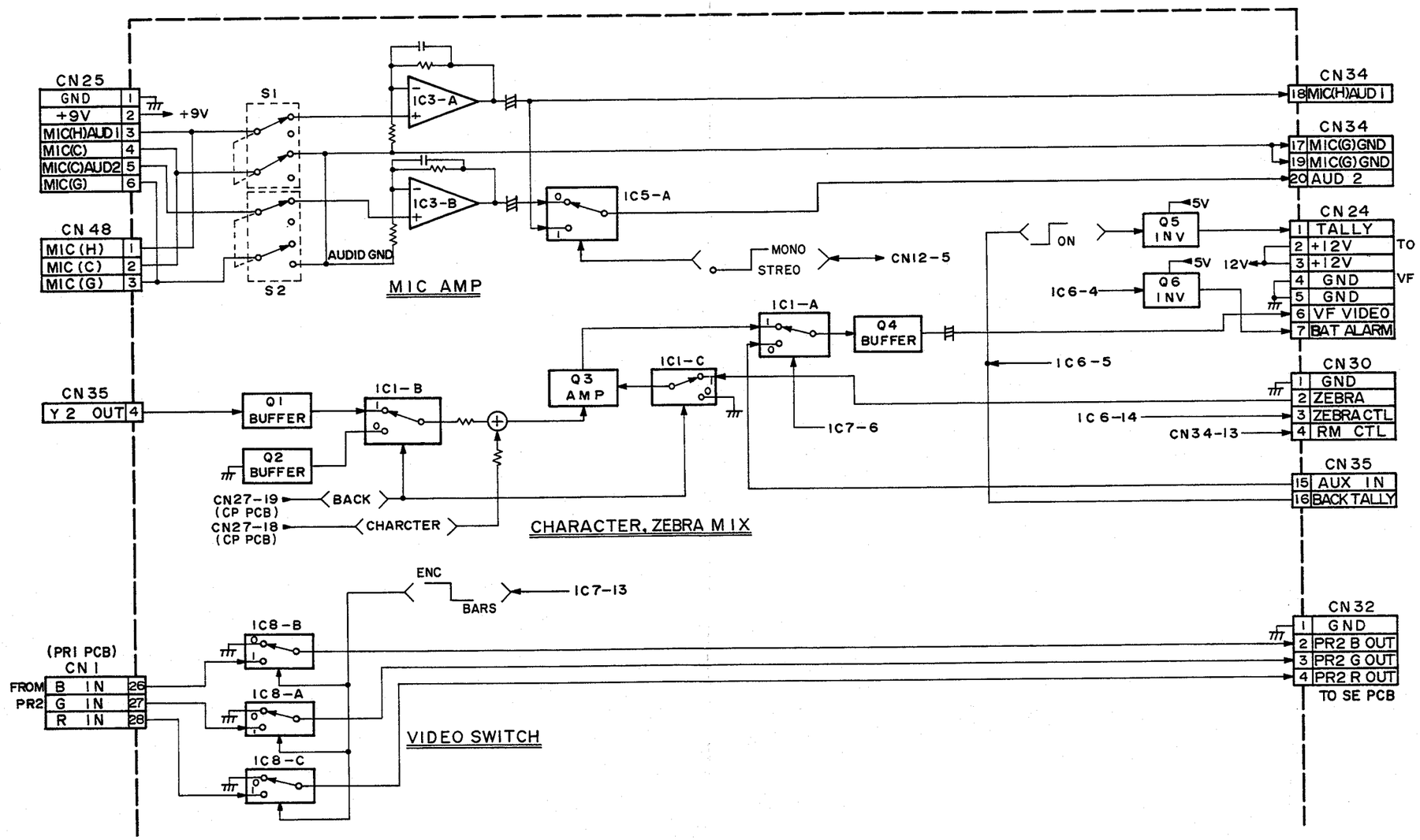

# SECTION 2
# SERVICE CAUTIONS AND DISASSEMBLY

## 2.1 POWER FUSE

The KY-27 camera head has neither power fuse nor power breaker.
When the camera adapter KA-27 is used together with, all circuits of the camera and the camera adapter are protected against over-current by the fuse prepared in the camera adapter KA-27. Refer to "Service Cautions and Disassembly" of KA-27's service manual (No. 60073) on page 2-1.
When the camera is docked with a VTR, all the circuits are protected by the fuse prepared in the VTR. Refer to the instructions of the VTR.

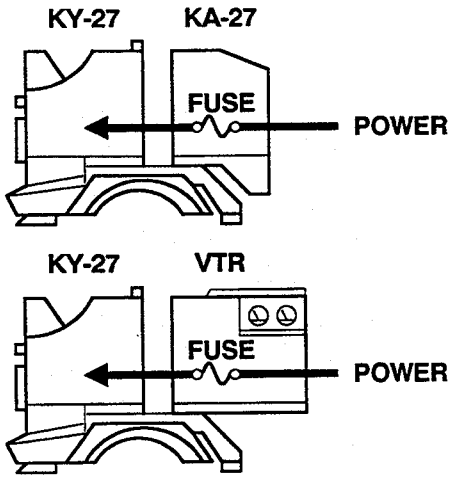


Fig. 2-1

## 2.2 LOCATION OF CIRCUIT BOARDS

| Board | Location (Description) | Ref. No. |
|---|---|---|
| CC | (Plug-in board) | ❸ |
| CN1 | In the lower right side of camera ("RM" connector mounting board) | ⓯ |
| CN2 | In the lower right side of camera ("GENLOCK INPUT", "VIDEO OUTPUT" connectors mounting board) | ⓰ |
| CP1 | In the right side of camera | ❷ |
| CP2 | Mounted on the CP1 board ("SET", "UP", "DOWN" switches) | ❹ |
| DR1 | Inside the optical block | ❶ |
| DR2 | Inside the optical block | ❶ |
| FR | In the right side of camera (For Filter Position detection) | ❻ |
| IF | In the rear side of camera (50-pin connector mounting board) | ❺ |
| IS | Inside the optical block (CCD mounting board, Unremovable) | ❶ |
| MT1 | In the left side of camera | ⓫ |
| MT2 | In the lower front part of camera | ⓮ |
| PA | Inside the optical block | ❶ |
| PR1 | (Plug-in board) | ❸ |
| PR2 | (Plug-in board) | ❸ |
| PS | (Plug-in board) | ❸ |
| SE | In the left side of camera | ⓱ |
| SW1 | In the front part of camera ("AUTO", "ZEBRA", "VTR" switches mounting board) | ⓭ |
| SW2 | In the lower right side of camera ("POWER" switch mounting board) | ❾ |
| SW3 | In the lower right side of camera ("VTR" switch mounting board) | ❿ |
| SW4 | In the lower right side of camera ("GAIN", "DISP", "MODE", "W. BAL" switches mounting board) | ❽ |
| SW5 | In the lower right side of camera ("IRIS", "FULL AUTO", "LOLUX", "SHUTTER" switches mounting board) | ❼ |
| SW6 | In the lower left side of camera ("MIC", "RETURN" switches, "PHASE" VR mounting board) | ⓬ |

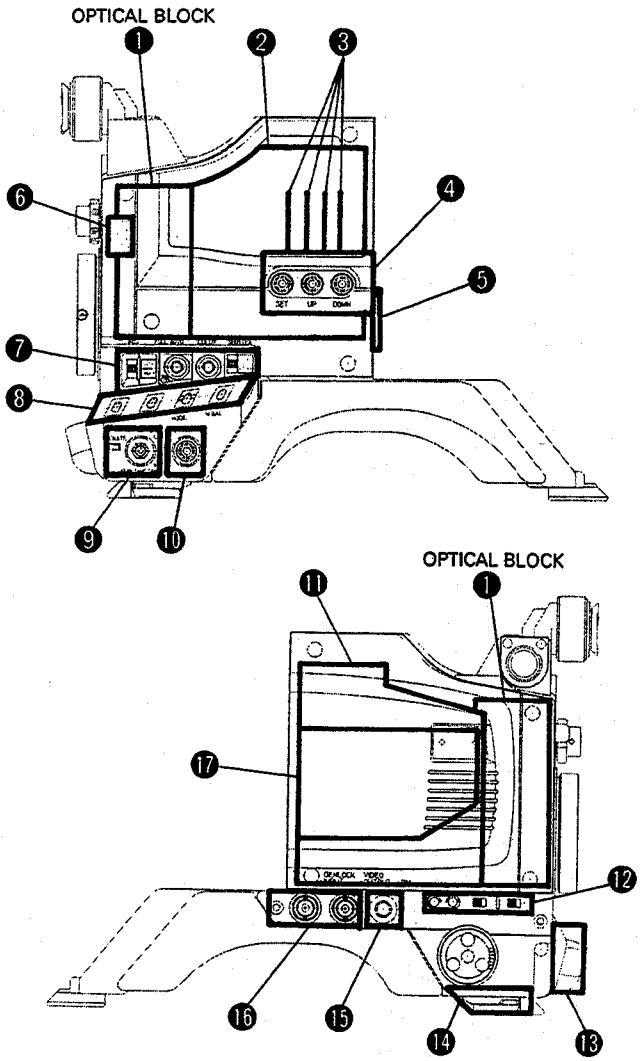


Fig. 2-2

Reference: For detaching camera from camera adapter, see KY-27's "Instructions" on page 71.
For replacing fuse of camera adapter, see "Service Cautions and Disassembly" of KA-27's service manual (No. 60073) on page 2-1.

## 2.3 REMOVAL OF MAIN BOARDS

### 2.3.1 Removal of CP1 board

1. Remove two screws ① from the board, and the CP1 board can be opened for servicing as shown the figure below.

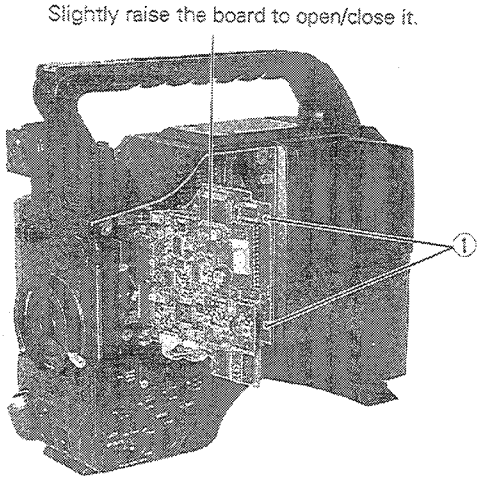


Fig. 2-3

Since the lower hinge is designed to open the board at an angle of 90°, raise the board slightly for closing it. If excessive force is applied to the board, it may damage chip parts.

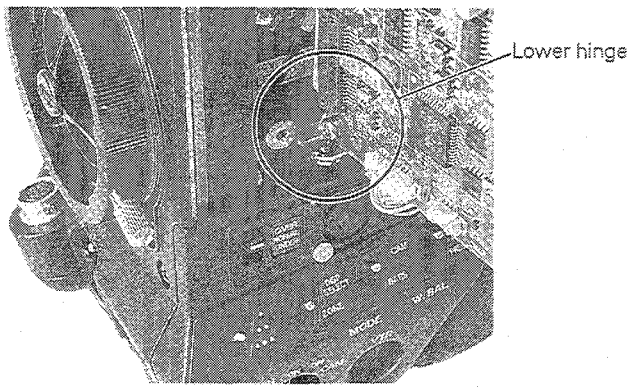


Fig. 2-4

2. For removing the CP1 board, lift it upward to release it from the lower hinge.

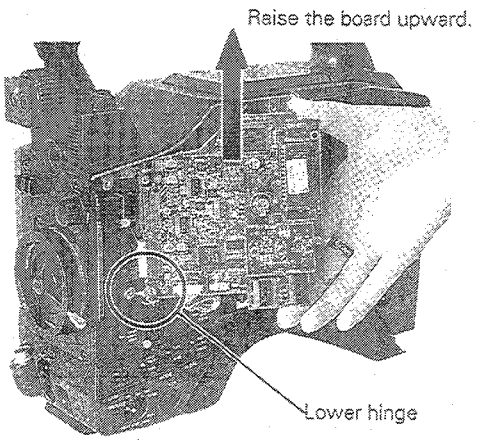


Fig. 2-5

### 2.3.2 Removal of plug-in boards

Four boards of the CC, PR1, PR2 and PS boards are plug-in type card boards.

• Removal of CC, PR1 and PR2 boards

Note: The CC, PR1 and PR2 boards are inserted into the MOTHER board as they are in combination of three in one.
When removing them, make sure to pull the PR1 board in the middle of the three.

1. Pull the PR1 board by the portion Ⓐ shown in the figure by hand to remove the three boards at a time.
   Note: Pay attention to the wire connected with CN33 on the CC board.

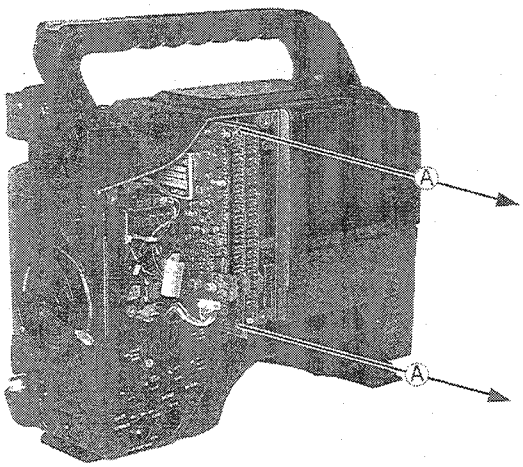


Fig. 2-6

When re-installing the board, make sure to connect the wire with CN33. Otherwise image on G-channel won't be processed.

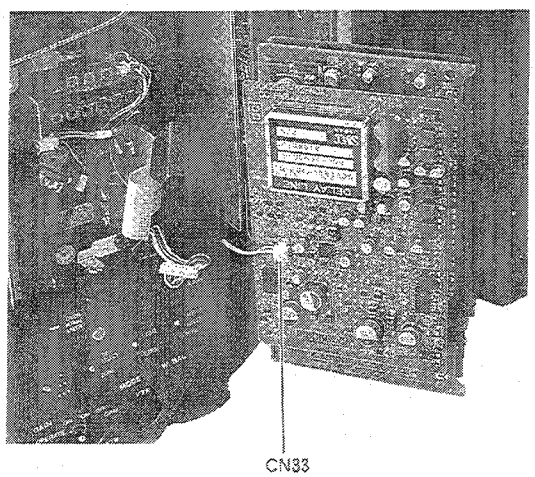


Fig. 2-7

2. These plug-in boards can be extended by the extension board (SCK2169) provided for the KY-25 series camera.
3. The CC board and the PR2 board can be checked by opening them as shown in the following figure.
   Centering the PR1 board, open the CC and PR2 boards at an angle of 90° respectively and pull them in the direction of the arrow to detach them from the PR1 board.

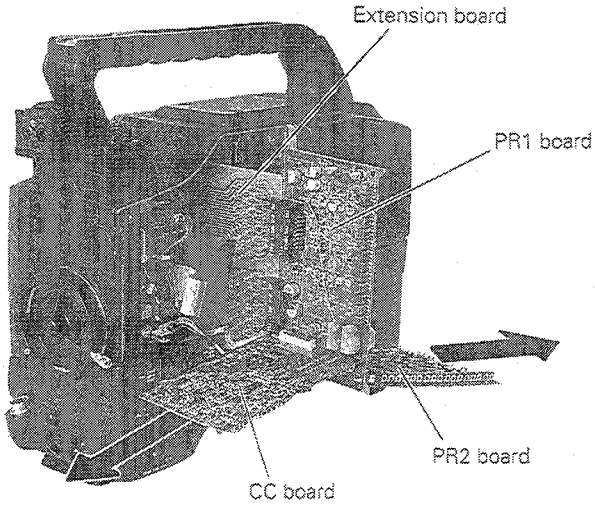


**Fig. 2-8**

• Removal of PS board

1. In the same manner as for the CC, PR1 and PR2 boards, the PS board can be removed by pulling it to your side.
   The PS board can be extended by the extension board SCK2169 provided for the KY-25 series camera.

### 2.3.3 Removal of SE board (in the side of left side cover)

1. Remove two screws ②.
2. The SE board is retained by the connectors in the portions Ⓑ.
   To remove the board, pull it by the connectors in the portions Ⓑ to your side.

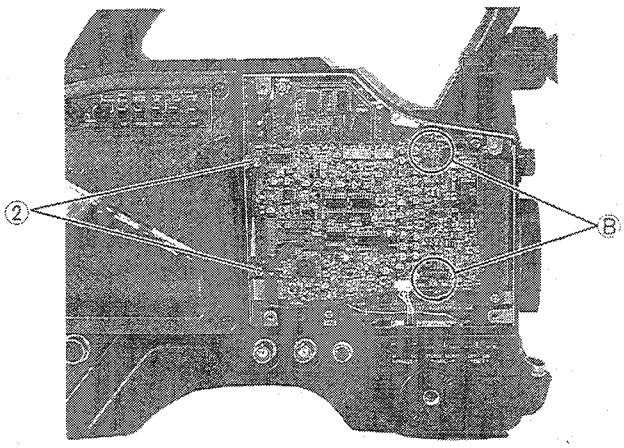


**Fig. 2-9**

The connectors of the portions Ⓑ are not used for signal transmission but used for retaining the SE board only.

## 2.4 OPTICAL BLOCK ASSEMBLY

### 2.4.1 Removal of optical block assembly

Note: Make sure to cut off the power before proceeding to the following procedures.

1. Remove the both side covers.
2. Remove a screw ③ from the MT1 board in the left side of the camera and a screw ④ from the lower side.

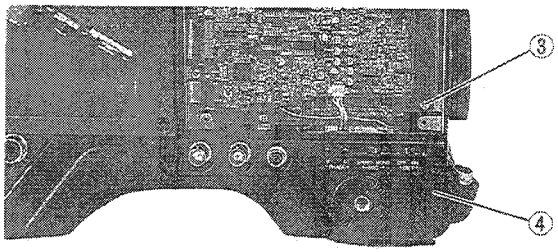


**Fig. 2-10**

3. Remove three screws ⑤ from the front part of the camera.
4. Remove two screws ⑥ from the bottom of the camera.

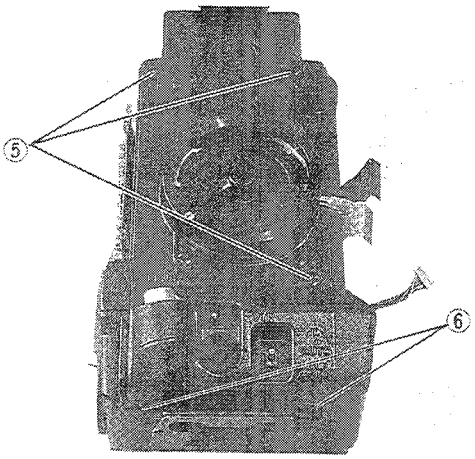


**Fig. 2-11**

5. Gently draw out the optical block assembly frontward together with the front panel.

Note: When drawing out the optical block assembly, pay the most careful attention to the boards and flat cables not to damage them.

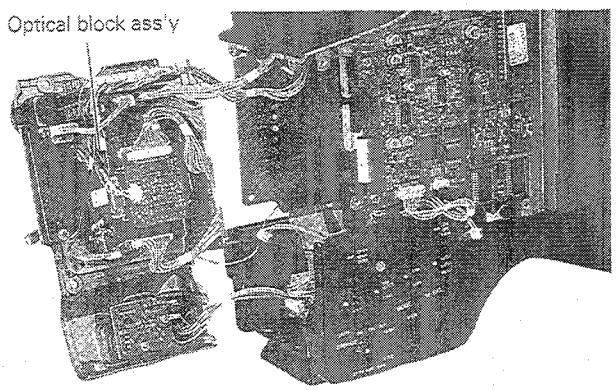


**Fig. 2-12**

The optical block assembly can be inspected in this state.

Reference: For the part number of the extension board, see "Electrical Adjustment" on page 3-2.

### 2.4.2 Removal of optical filter assembly

1. Loosen the screws ⑦ completely. (These screws need not to remove.)
2. Remove the optical filter assembly in the direction of the arrow.

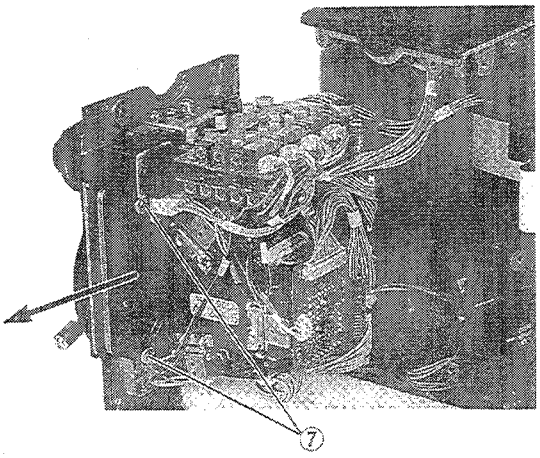


Fig. 2-13

3. Although the optical filter assembly generally need not to disassemble, the following figure illustrates the positional relation between the filters and the shaft to detect filters for a reference of reassembling if it is once disassembled.

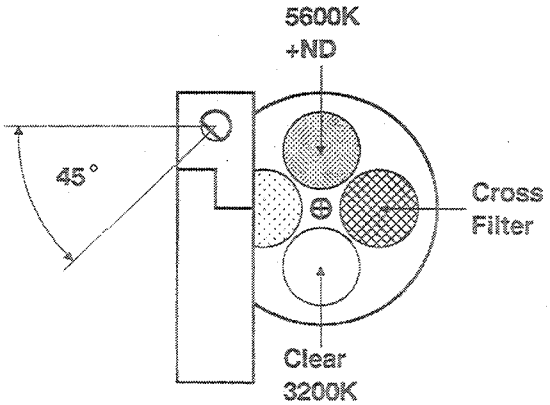


Fig. 2-14

### 2.4.3 Disassembly of optical block assembly

Note: If something wrong is detected in the CCD, the CCD cannot be replaced alone since it is precisely glued to the prism. The defective CCD must be replaced with a new optical block assembly as a whole.
A spare optical block assembly to be supplied for servicing is not equipped with the front panel, DR1, DR2, PA boards, etc. Use those existing in the assembly by removing them in the following manner.

1. Referring to the previous descriptions, remove the optical block assembly from the camera head.
2. Remove the optical filter assembly referring to the previous section.
3. Remove four screws ⑧ from the front panel ©. Detach the front panel © from the optical block.

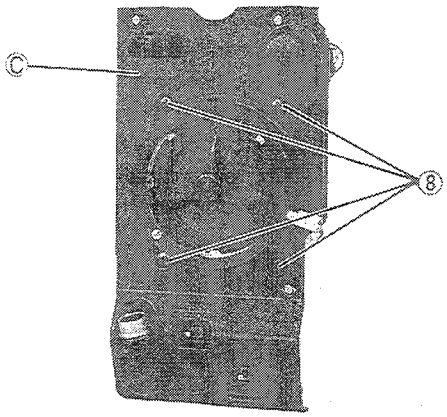


Fig. 2-15

4. Remove a screw ⑨ from the DR2 board.
5. Remove three screws ⑩ and remove the PA, DR1 and DR2 boards together with the board brackets ⓓ.

Note: When removing the screw from the DR2 board, be the most careful not to damage any pin of ICs.

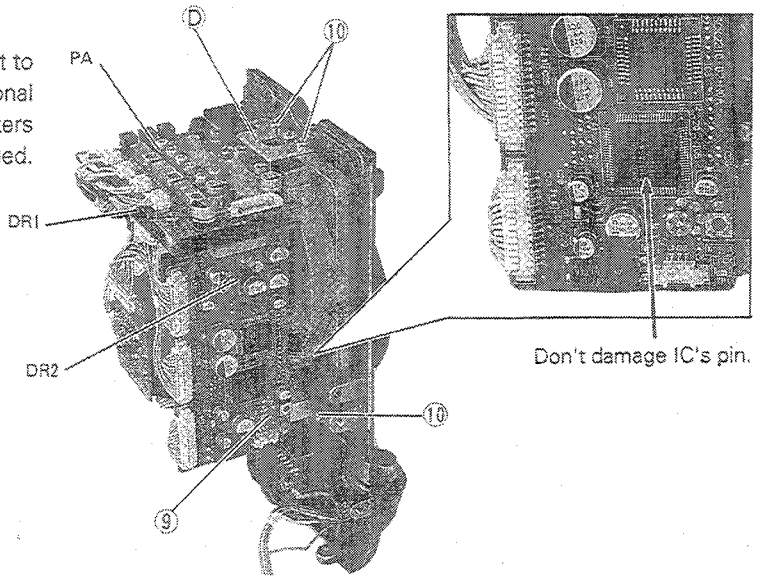


Fig. 2-16

Note: As mentioned above, a spare optical block assembly to be supplied for servicing is not equipped with the DR1, DR2 and PA boards. When replacing the optical block assembly, assemble the DR1, DR2 and PA boards that are used in the old assembly to the new assembly before installing it to the camera head.

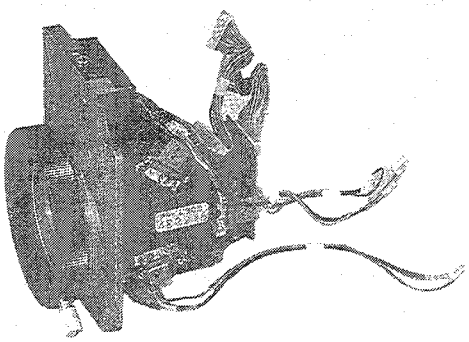

Fig. 2-17

## 2.5 FUNCTIONS OF CAMERA'S INTERNAL SWITCHES

Respective functions of internal switches of the camera are as described in the following.

| Symbol No. | Switch Name | Initial Setting at shipment |
|---|---|---|
| S1 (CP1 board) | MODE SELECT switch<br>CHECK switch | 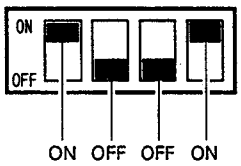 |

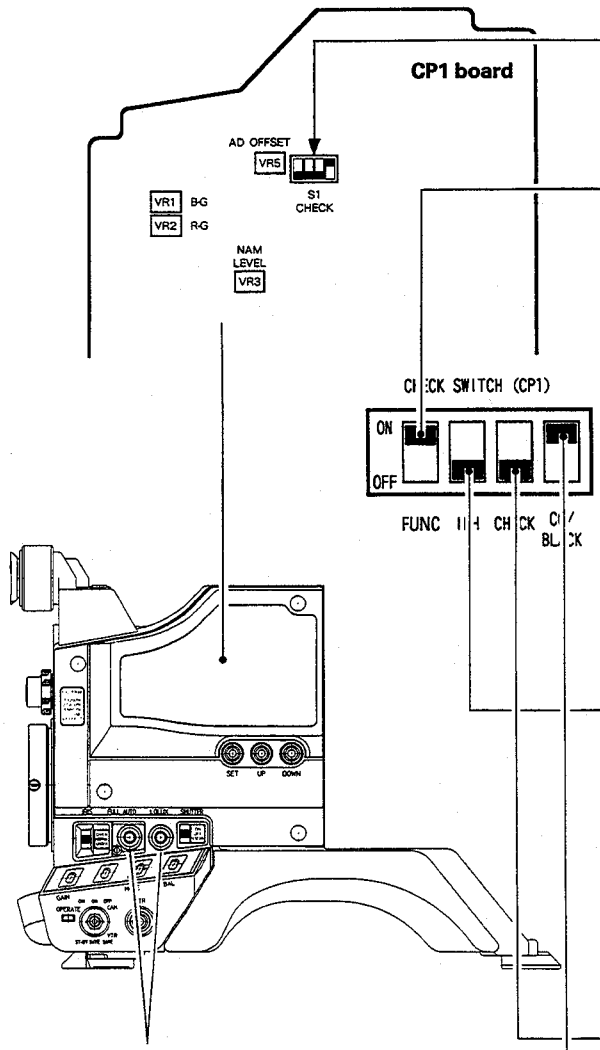


① FUNCTION SELECT switch (U version only)
To change the function mode.

| Setting position | ON | OFF |
|---|---|---|
| GAIN setting | 0 (•), +9 (••), +18 (•••) dB | 0 (•), 6 (••), +9 (•••) dB |
| V. scan rate | *1/60 to 1/2000 | *1/60 to 1/249.8 |
| ALC range | 0 to +18 dB | 0 to +12 dB |

This switch comes into effect only in the U-version. In the E-version, selection for respective modes are limited as shown in this box regardless of set positions of this switch. (In the E-version, V. scan rate is from *1/50 to 1/2000.)

② LOLUX & FULL AUTO ON/OFF switch
To activate or inactivate the LOLUX and FULL AUTO functions.

ON : Inactivates the FULL AUTO and LOLUX switches regardless of operation of them.

OFF: Gets the FULL AUTO and LOLUX switches to operate effectively.

This switch deals with user's request to inactivate the FULL AUTO and LOLUX switches for avoiding erroenous operation.

③ CHECK MODE ON/OFF switch
To turn on/off the check mode of the CPU for convenience of servicing. For detail of the check mode, refer to the section 3 "Electrical Adjustment".

④ CONTOUR CORRECTION ON/OFF or BLACK ADJUST MODE ON/OFF switch
This switch differently functions depending on setting of the ③ CHECK MODE ON/OFF switch.

| CHECK MODE switch setting | CC/BLACK ADJUST switch setting | Function | Description |
|---|---|---|---|
| ON | ON | Black Adjust Mode ON/ OFF switch | Black adjust mode. Black slice is off and black level increases. |
| | OFF | | Normal check mode. |
| OFF | ON | Contour Correction ON/ OFF switch | CONTOUR : ON |
| | OFF | | CNTROUR : OFF |

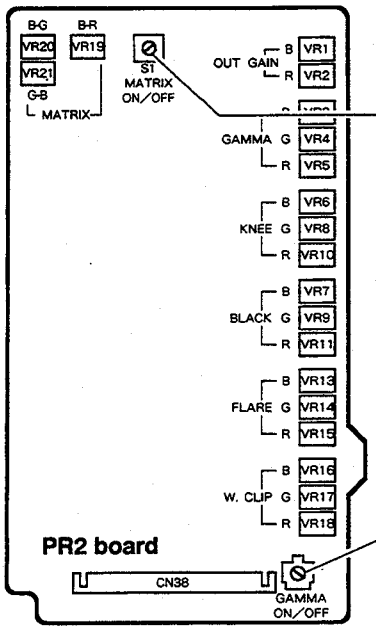


| Symbol No. | Switch Name | Initial Setting at shipment |
|---|---|---|
| S1 (PR2 board) | MATRIX switch | ON |

To turn on/off the color matrix function.

ON : Activates color matrix masking.

OFF: Inactivates color matrix masking.

| Symbol No. | Switch Name | Initial Setting at shipment |
|---|---|---|
| S2 (PR2 board) | GAMMA CORRECTION switch | ON |

To turn on/off the gamm correction function.

ON : Activates gamma correction.
Gamma level can be selected by VR3, VR4 and VR5 of GAMMA VRs.

OFF: Inactivates gamma correction. ( $\gamma = 1$)

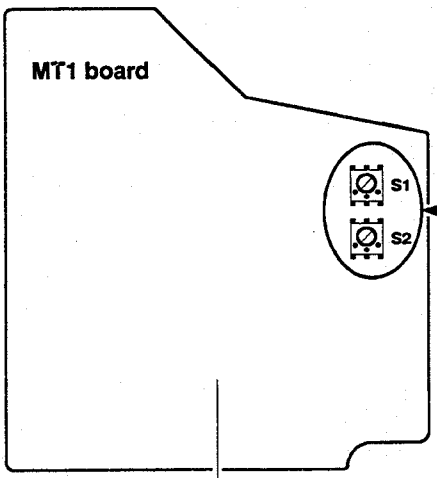


| Symbol No. | Switch Name | Initial Setting at shipment |
|---|---|---|
| S1 S2 (MT1 board) | AUDIO OUT-PUT SYSTEM SEELECT switch | S1 : ON<br>S2 : ON |

When the VTR adapter KA-P27/KA-M27 (optional) is connected, micro-phone sound is directly output from the connector CN48 without passing through the camera's internal audio amplifier.

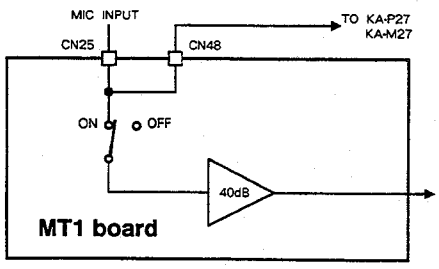


: Normal setting : ON

: When KA-P27/KA-M27 connected with : OFF

**Note:** When changing the setting position, make sure to set the both switches (S1 and S2) to the same position.

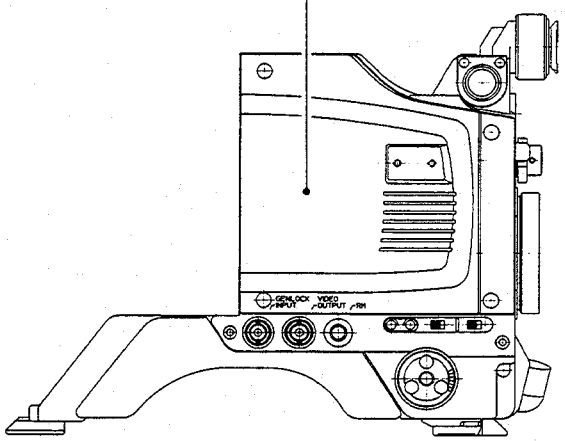

# SECTION 3
# ELECTRICAL ADJUSTMENTS

## 3.1 FLOWCHART OF ELECTRICAL ADJUSTMENTS

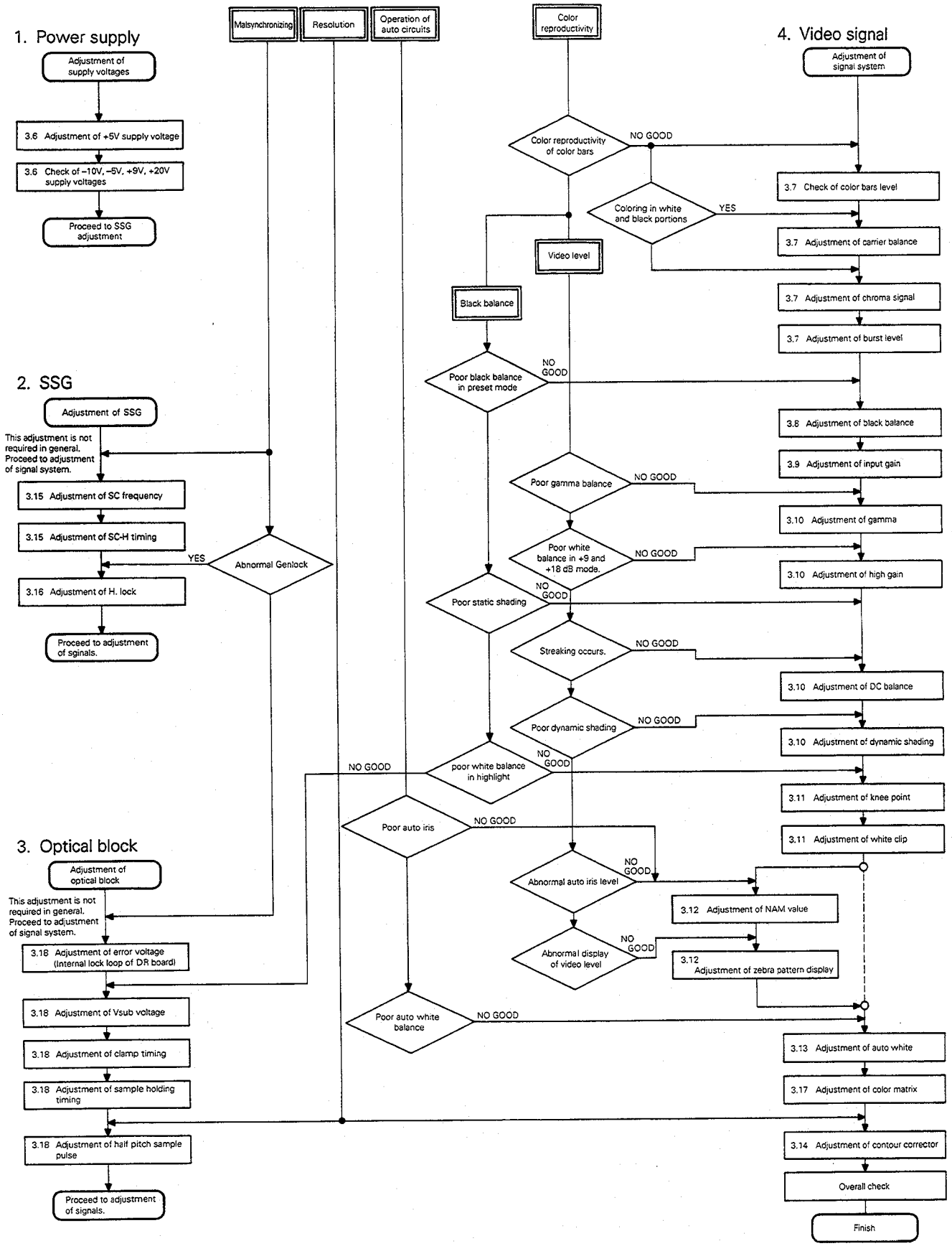

## 3.2 REQUIRED EQUIPMENT AND STANDARD SETUP FOR ELECTRICAL ADJUSTMENT

### 3.2.1 Necessary instruments

1. Lighting apparatus (3200 K halogen lamps)
2. DC voltmeter (digital voltmeter is preferable)
3. Oscilloscope (dual trace type is preferable)
4. Frequency counter
5. Color TV monitor
6. Waveform monitor
7. Vectorscope
8. 12 V DC power supply (AC power adapter AA-P250)
9. Camera lens (A14 X 10BRM12 preferable)
10. Camera adapter (KA-27)* (See Note.)
11. Viewfinder (VF-P115)

Note: The camera adapter KA-27 is necessary to supply power to this camera because the camera receives power through the 50-pin connector on the rear panel and it cannot directly receive any power alone.

### 3.2.2 Special implements for electrical adjustments

| 1 | Tripod base | 2 | Extension board (60 pins) | 3 | Gray scale chart |
|---|---|---|---|---|---|
| < KA-510 > 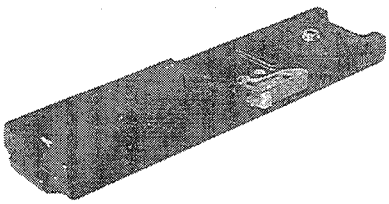 | | < Part No. SCK2169 > 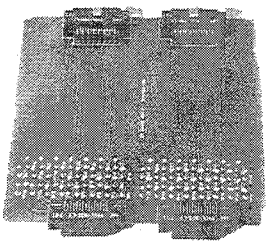 (Same for KY-25 & KY-17 series cameras) | | < Part No. GS2L > 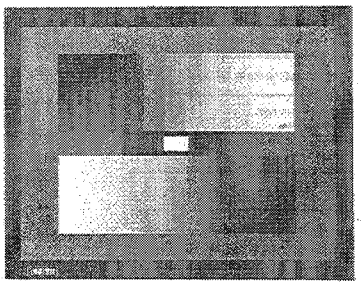 | |
| 4 | In-megacycle chart | | | | |
| < Part No. RESC-010 > 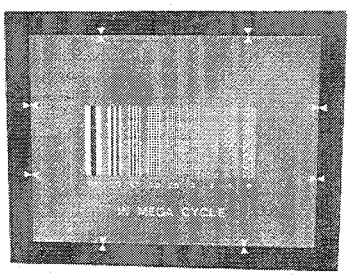 | | | | | |

### 3.2.3 Standard setup

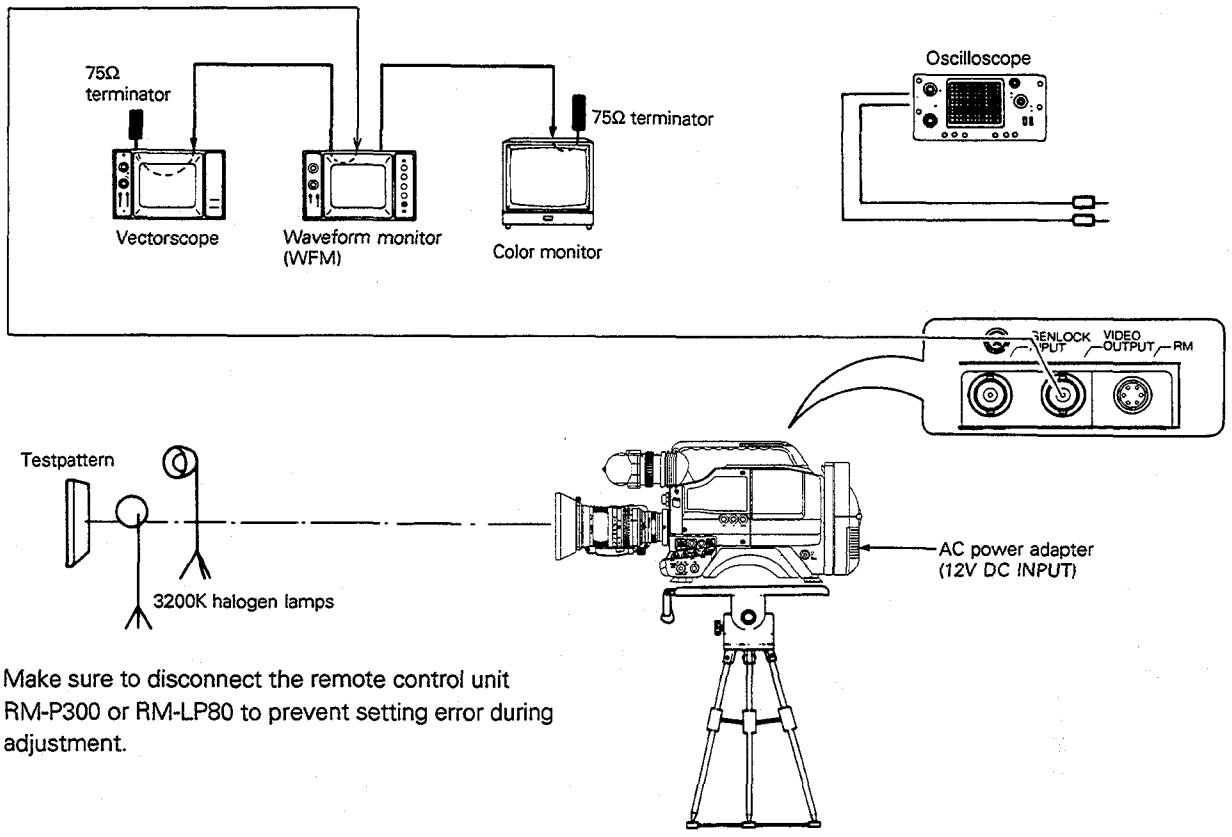


**Note:** Make sure to disconnect the remote control unit RM-P300 or RM-LP80 to prevent setting error during adjustment.

### 3.2.4 Special implements for electrical adjustments

Siwtches that need to reset for adjustment are shown below. For adjustments described in this section, set these switches as follows unless otherwise indicated in the adjustment procedures.

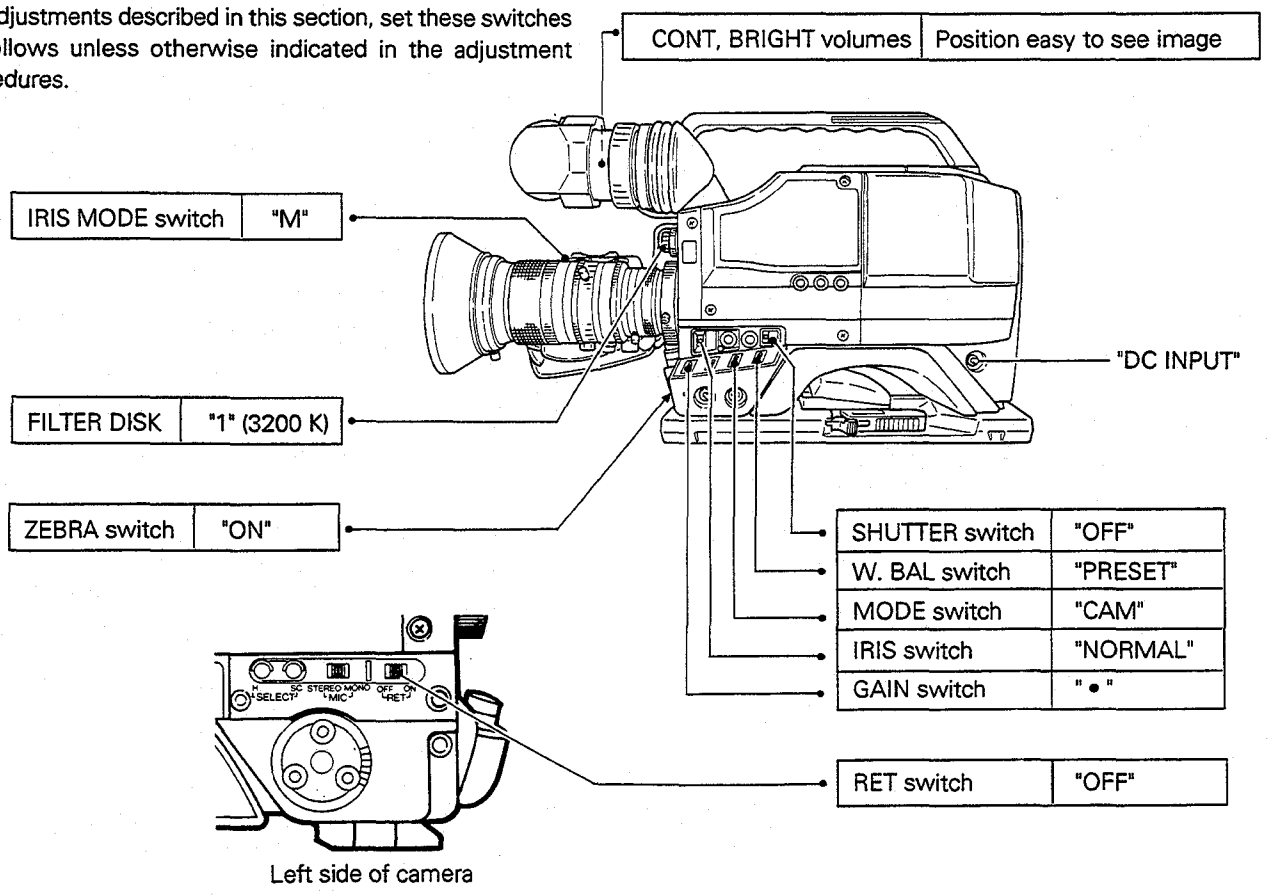

## 3.3 BEFORE PROCEEDING TO ADJUSTMENT

### 3.3.1 System reset

This camera has the function called "Camera Setup Mode" which enables the user to vary contour level, master black level, etc. by operating the SET, UP and DOWN switches as well as to set camera modes optionally by these switches. (For the camera setup mode, refer to the instructions of the camera.)
Before proceeding to do any adjustment of the camera, make sure to reset the system to restore the initial setting of contour and master black levels stored in the CPU at shipment referring to the following explanation.

**Cautionary note:**
Before resetting the system, make sure to notice the user that the camera needs to reset the system for adjustment.
If it is required to restore the user's optional settings after servicing, record the user's data and set them again after servicing.

● **Items that are initialized by the system preset are as follows.**

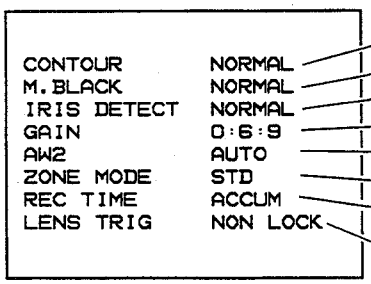


- CONTOUR level : NORMAL
- MASTER BLACK level : NORMAL
- IRIS DETECTION mode : NORMAL
- GAIN switch setting : 0 : 9 : 18
- W. BAL switch's AW2 position : AUTO
- SAFETY ZONE mode : STD
- RECORDING TIME indication : ACCUM (Accumulated recording time)
- LENS TRIGGER setting : NON LOCK (momentary switch)
- FULL AUTO SHOOTING : OFF
- LOLUX : OFF
- SAFETY ZONE display : OFF
- STATUS display : Display mode "0"
- SHUTTER speed : 1/100 (U version), 1/120 (E version)
- V. SCAN SHUTTER speed : 1/60 (U version), 1/50 (E version)
- ACCUMULATED RECORDING TIME : 0:00

● **Procedure to reset system**

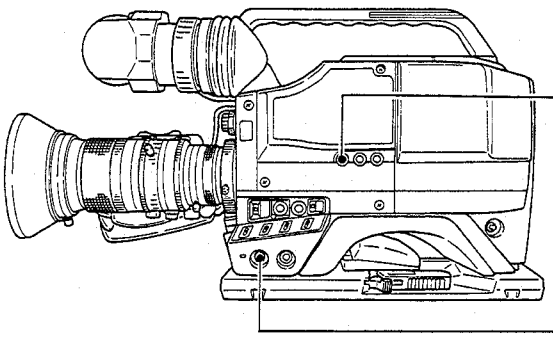

1) Hold down the SET button, while
2) setting the POWER switch to "ON/STBY" from "OFF/SAVE".

⬇

The system is consequently reset as above-mentioned data stored in the CPU are initialized.

Reference : Camera Setup Mode ; Refer to the section 4.10 "CAMERA SET-UP" in the KY-27's instructions on page 57.

### 3.3.2 Check mode

The CPU of this camera has a servicing mode which is convenient for electrical adjustments. This mode is called the Check Mode of the CPU.

● **Procedure to activate check mode**

Set the 3rd knob of the CHECK switch (S1) on the CP1 board to "ON", and the check mode is activated with display of the adjustment menu in the viewfinder.

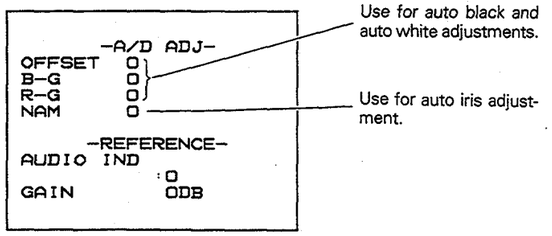


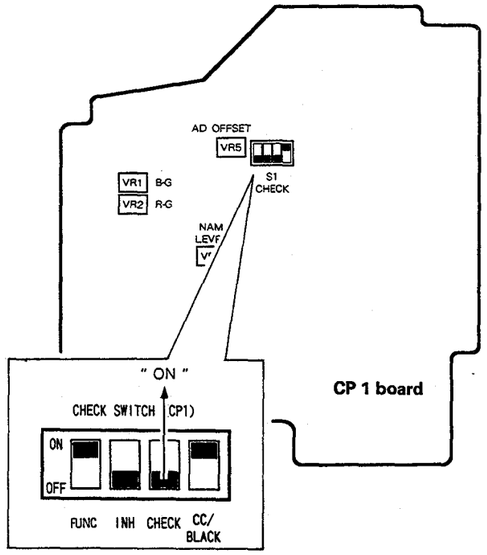


● **Camera's conditions in Check Mode**

This camera enables the user to change and to reset the initial settings of video process control levels such as contour and master black levels, etc. with the camera setup menu.
When the camera is set to the check mode, it is fixed in the conditions of shown in next page regardless of user's optional settings. However, stored data of user's settings are not initialized but are temporarily cancelled, therefore, those data are restored after the check mode ends.

Make sure to return S1 to S3 of the CHECK switch on the CP1 board to "OFF" position after servicing.

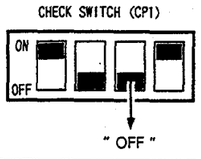


- **In the check mode, the camera is in the following conditions**

1. Function of the CONTOUR ON/OFF switch changes.
   In the check mode, this switch functions as the ON/OFF switch of the black adjustment mode.
   ON : Black adjustment mode
   Black slice that is processed by ICs (IC1, IC2, IC3) on the PR2 board is inactivated and the black level increases.
   OFF: Normal adjustment mode
2. Contour correction function is automatically turned off in the check mode.
3. Auto knee function is automatically turned off in the check mode, but the normal fixed knee function is effective.
4. Master black level is set to the normal level (supply voltage to the pin 22 of the PR2 board is 2.75 V) in the check mode.
5. Black balance is in the preset condition (supply voltage to pins 8, 9 and 10 of CN21 of the PR1 board is 2.5 V) in the check mode.

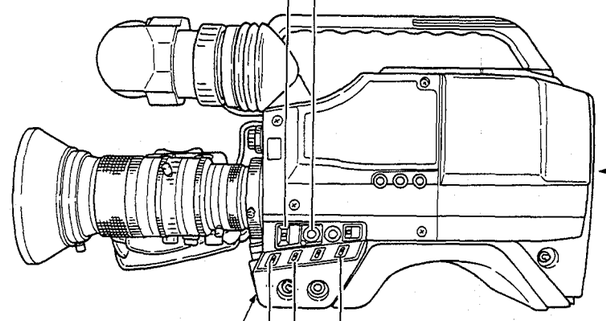

- AUTO IRIS MODE : Regardless of setting position of the IRIS MODE switch, it enters the "NORMAL" mode.
- FULL AUTO : Full Auto Shooting function is forcibly turned off.
  In the check mode, pressing this switch has no effect to activate the Full Auto Shooting.
- Communication line is cut off and the remote control unit cannot be used.
- W. BAL switch : When this switch is set to "AW2" position, the mode is not the FAW (Full Time Auto White) mode but is the normal Auto White 2 Memory mode.
- DISP SELECT : Display in the viewfinder is the check mode menu which cannot be replaced by pressing this switch.
- GAIN switch : Setting positions of this switch correspond to "•" (0 dB), "••" (+9 dB) and "•••" (+18 dB) respectively.
- AUTO switch : In the check mode, neither auto white adjustment nor auto black adjustment is activated by this switch.


3-5

## 3.4 OVERALL BLOCK DIAGRAM

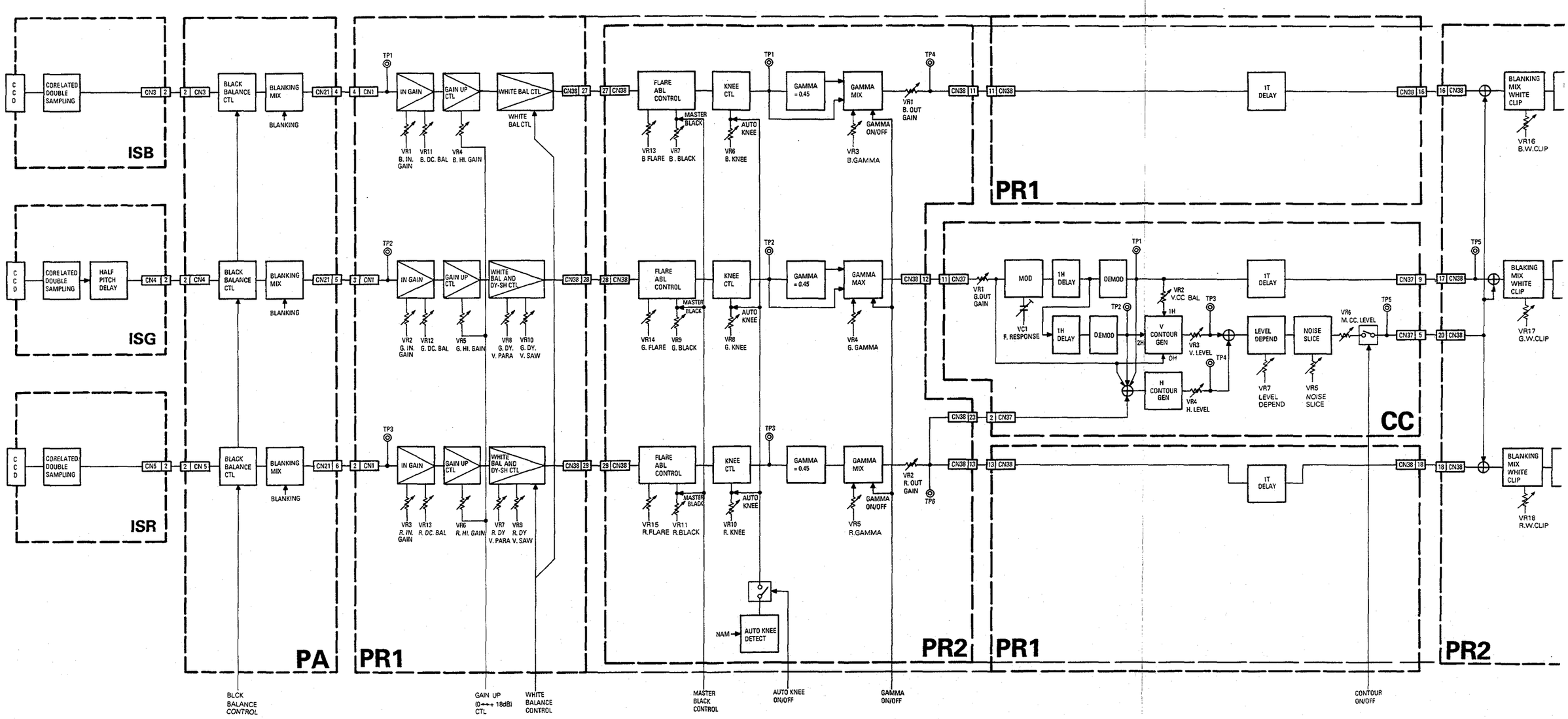

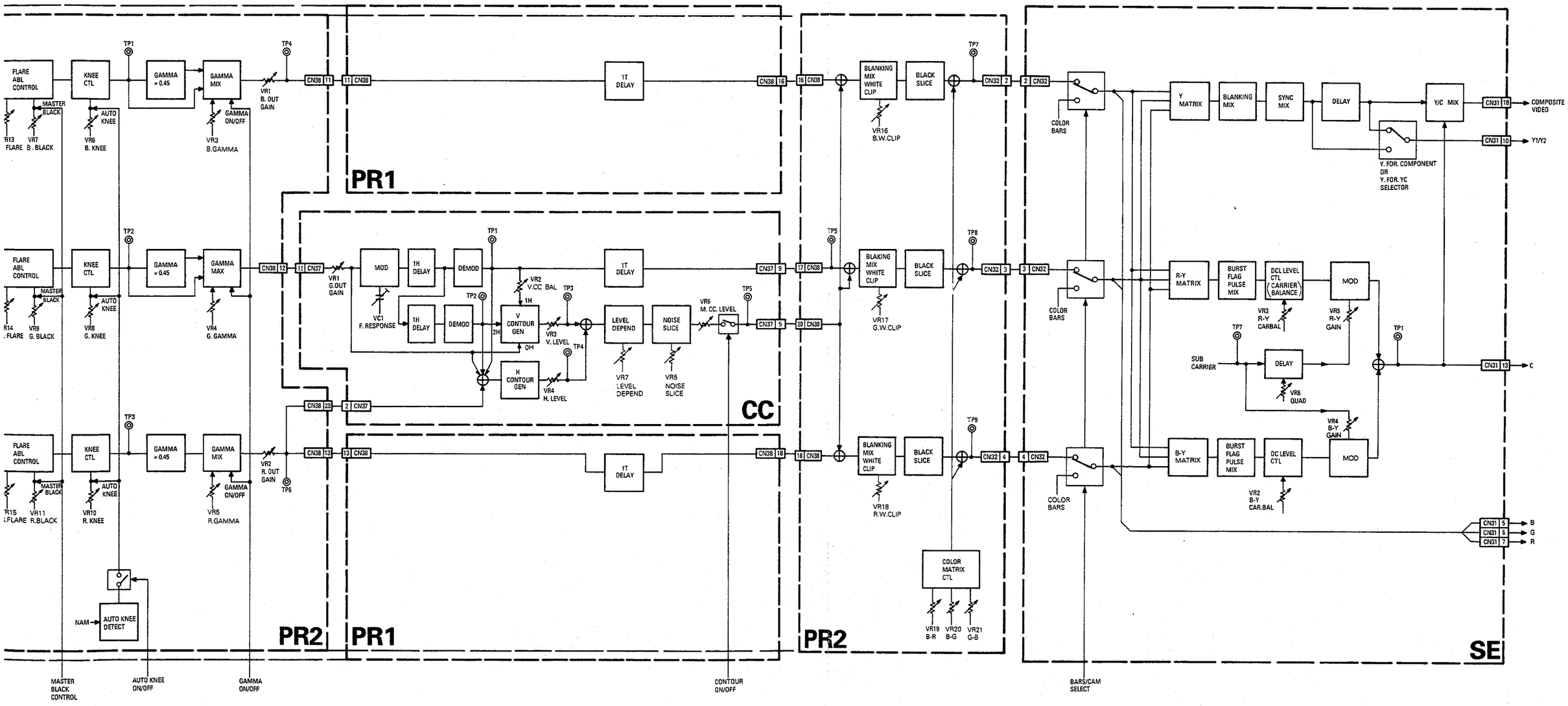
PR1
CC
PR2
PR1
PR2
SE
FLARE ABL CONTROL
KNEE CTL
GAMMA = 0.45
GAMMA MIX
GAMMA MAX
MASTER BLACK
AUTO KNEE
GAMMA ON/OFF
VR1 B. OUT GAIN
VR3 B.GAMMA
VR6 B. KNEE
VR7 B. BLACK
VR13 FLARE
VR9 G. BLACK
VR8 G. KNEE
VR4 G. GAMMA
VR11 R.BLACK
VR10 R. KNEE
VR5 R.GAMMA
VR2 R. OUT GAIN
AUTO KNEE DETECT
NAM
1T DELAY
MOD
1H DELAY
DEMOD
VR1 G.OUT GAIN
VC1 F. RESPONSE
VR2 V.CC BAL
V CONTOUR GEN
H CONTOUR GEN
VR3 V. LEVEL
VR4 H. LEVEL
LEVEL DEPEND
NOISE SLICE
VR6 M. CC. LEVEL
VR7 LEVEL DEPEND
VR5 NOISE SLICE
BLANKING MIX WHITE CLIP
BLAKING MIX WHITE CLIP
BLACK SLICE
VR16 B.W.CLIP
VR17 G.W.CLIP
VR18 R.W.CLIP
COLOR MATRIX CTL
VR19 B-R
VR20 B-G
VR21 G-B
COLOR BARS
Y MATRIX
BLANKING MIX
SYNC MIX
DELAY
Y/C MIX
Y. FOR. COMPONENT OR Y. FOR. YC SELECTOR
COMPOSITE VIDEO
Y1/Y2
R-Y MATRIX
BURST FLAG PULSE MIX
DCL LEVEL CTL (CARRIER BALANCE)
VR3 R-Y CARBAL
VR5 R-Y GAIN
SUB CARRIER
VR6 QUAD
B-Y MATRIX
DC LEVEL CTL
VR4 B-Y GAIN
VR2 B-Y CAR.BAL
MASTER BLACK CONTROL
AUTO KNEE ON/OFF
GAMMA ON/OFF
CONTOUR ON/OFF
BARS/CAM SELECT

## 3.5 TABLE OF MEASURING POINTS, ADJUSTMENT PARTS AND ADJUSTMENT LEVELS OF VIDEO SYSTEM

| Reference Section (Page) | Item | Setting of Switches, etc. | GAIN SW | CHECK SW | BLACK/ CC SW | Measuring Points ◎ | Adjustment Parts ⓣ | Adjustment Levels ☆ | NTSC | PAL |
|---|---|---|---|---|---|---|---|---|---|---|
| 3.7-2 (p.3-9) | Y. sync setup | • MODE switch → BARS | "●" | OFF | ON | VIDEO OUTPUT | Fixed | Y<br>SYNC<br>SETUP | 0.714 Vp-p<br>0.286 VP-P<br>0.053 Vp-p | 0.7 Vp-p<br>0.3 Vp-p<br>– |
| 3.7-3 (p.3-9) | Carrier balance | | | | | | SE ⓣ VR2, B-Y C. BAL<br>ⓣ VR3, R-Y C. BAL | Min. carrier leak in white and black portions | | |
| 3.7-4 (p.3-10) | Chroma level color vector | | | | | | SE ⓣ VR4, B-Y GAIN<br>ⓣ VR5, R-Y GAIN<br>ⓣ VR6, QUAD | Every dot positions in the ⊞ mark respectively. | | |
| 3.7-5 (p.3-10) | Burst level | | | | | | Fixed | 0.286 Vp-p (NTSC)<br>0.3 Vp-p (PAL) | | |
| 3.8-2 (p.3-11) | Black balance | • MODE switch → CAM<br>• Lens: Capped | ●<br>●●● | ON | ON | PR2 ◎TP2 | PA ⓣVR2, G. BLACK BAL | No DC variation in signal as GAIN SW is switched | | |
| | | | ● | ON | OFF | PR2 ◎TP5 | PR2 ⓣVR9, G. BLACK | Video center and noise center accord with each other. | | |
| | | | ●<br>●●● | ON | ON | VIDEO OUTPUT | PR2 ⓣVR7, B. BLACK<br>ⓣVR11, R. BLACK | Minimum carrier leak | | |
| 3.8-4 (p.3-12) | Black balance det. voltage | | ● | | | Viewfinder screen | CP1 ⓣVR5, AD. OFFSET | Indication : "0" | | |
| 3.9-1 (p.3-13) | Standard iris setting | • MODE switch → CAM | ● | ON | OFF | PR1 ◎TP2 | Lens iris | 0.6 Vp-p | | |
| 3.9-2 (p.3-13) | Input gain | • Iris: MANUAL<br>• Gray scale chart | | | | PR2 ◎TP1 (B)<br>◎TP2 (G)<br>◎TP3 (R) | PR1 ⓣVR1, B. IN GAIN<br>ⓣVR2, G. IN GAIN<br>ⓣVR3, R. IN GAIN | 1.2 Vp-p | | |
| 3.10-1 3.10-2 (p.3-14) | Video level | | | | | PR2 ◎TP8 | CC ⓣVR1, G. OUT GAIN | 1.4 VP-P | | |
| | | | | | | VIDEO OUTPUT | PR2 ⓣVR1, B. OUT GAIN<br>ⓣVR2, R. OUT GAIN | Minimum carrier leak | | |
| 3.10-1 3.10-2 (p.3-14) | Gamma | | | | | PR2 ◎TP8 | PR2 ⓣVR4, G. GAMMA | 0.73 Vp-p (Cross point) [NTSC]<br>0.78 Vp-p (Cross point) [PAL] | | |
| | | | | | | VIDEO OUTPUT | ⓣVR3, B. GAMMA<br>ⓣVR5, R. GAMMA | Minimum carrier leak | | |
| 3.10-3 (p.3-14) | High gain | | ● | | | PR1 ◎TP2 | Lens iris | 0.2 Vp-p | | |
| | | | ●● | | | PR2 ◎TP2 | PR1 ⓣVR5, G. HI GAIN | 1.2 Vp-p | | |
| | | | | | | VIDEO OUTPUT | ⓣVR4, B. HI GAIN<br>ⓣVR6, R. HI GAIN | Minimum carrier leak | | |
| 3.10-4 3.10-5 (p.3-15) | DC balance | • Lens: Capped | ●●● | | | PR2 ◎TP2 | PR1 ⓣVR12, G. DC BAL<br>ⓣVR10, G. DY SAW | Flat waveform with DY SAW VRs set to full clockwise/ counterclockwise position. (Adjust by DC BAL VRs.) | | |
| | | | | | | PR2 ◎TP3 | PR1 ⓣVR13, R. DC BAL<br>ⓣVR9, R. DY SAW | | | |
| | | • Window chart<br>• Iris: AUTO | | | | VIDEO OUTPUT | PR1 ⓣVR11, B. DC BAL | Minimum streaking | | |
| 3.10-6 (p.3-16) | Dynamic shading | • Gray scale chart<br>• Iris: AUTO | ● | | | VIDEO OUTPUT (V-rate) | PR1 ⓣVR10, G. DY SAW<br>ⓣVR9, R. DY SAW<br>ⓣVR8, G. DY PARA<br>ⓣVR7, R. DY PARA | Flat waveform and minimum carrier leak | | |
| 3.10-7 (p.3-16) | Flare | | | | | VIDEO OUTPUT | PR2 ⓣVR13, B. FLARE<br>ⓣVR14, G. FLARE<br>ⓣVR15, R. FLARE | Level of 1st step of gray scale is (80 mV: NTSC/40 mV: PAL) with minimum carrier. | | |
| 3.11-1 (p.3-17) | Knee point | • Gray scale chart<br>• Iris: AUTO | ●● | | | VIDEO OUTPUT | PR2 ⓣVR8, G. KNEE<br>ⓣVR6, B. KNEE<br>ⓣVR10, R. KNEE | 0.714 V (Knee point) [NTSC]<br>0.7 V (Knee point) [PAL] | | |
| 3.11-2 (p.3-17) | White clip | | | | | | PR2 ⓣVR17, G. W. CLIP<br>ⓣVR16, B. W. CLIP<br>ⓣVR18, R. W. CLIP | 0.785 V (White peak) [NTSC]<br>0.77 V (White peak) [PAL] | | |
| 3.14-2 (p.3-20) | Contour V. balance | • Gray scale chart<br>• Iris: AUTO | ● | OFF | ON | CC ◎TP5 (V-rate) | CC ⓣVR2, V. CC BAL | Minimum video component | | |
| 3.14-3 (p.3-20) | Noise slice | | | | | CC ◎TP5 | CC ⓣVR5, NOISE SLICE | Noise level is half of that with NOISE SLICE set to open. | | |
| 3.14-4 (p.3-21) | Level dependence | | ●● | | | VIDEO OUTPUT | CC ⓣVR7, LEVEL DEPEND | Contour of the 1st step from the bottom of gray scale is invisible. | | |
| 3.14-5 (p.3-21) | V. contour | | ● | | | (V-rate) | CC ⓣVR3, V. LEVEL | 0.13 V (V. contour level)[NTSC]<br>0.11 V (V. contour level)[PAL] | | |
| 3.14-6 (p.3-21) | H. contour | • In-megacycle chart<br>• Iris: AUTO | | | | (H-rate) | CC ⓣVR4, H. LEVEL | 100% modulation [NTSC]<br>120% modulation [PAL]<br>(ration of 5 MHz amplitude to 0.5 MHz amplitude) | | |

**Note:** Arrangement of adjustment parts and measuring points are illustrated on the last page of this section. It is suggested to fold out the page for referring to parts location as shown in the figure.

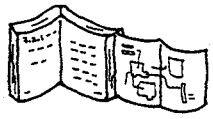

| No. | Item | Measuring instruments & Input signals | Measuring point ( ◎ )<br>Adjustment parts ( ⓣ )<br>Adjustment level ( ☆ ) | Adjustment procedure |
|---|---|---|---|---|

### 3.6 ADJUSTMENT OF POWER SUPPLY (PS) VOLTAGES

Note:
- When power supply voltage is different from the following value, adjust it according to the following procedure.
- After any of the power supply voltages is adjusted, it is required to proceed to adjust the items from "3.7 ADJUSTMENT OF ENCODER" to "3.14 ADJUSTMENT OF CONTOUR CORRECTOR".
- If it is necessary to pull out the PS board for check and adjustment, make sure to turn off the power beforehand and to do the work very carefully not to make contact the board with the camera body.

| | | | | |
|---|---|---|---|---|
| A-1 | +5 V supply voltage adjustment | Digital voltmeter | ◎ TP1 [PS]<br>ⓣ +5 V ADJ (VR1)<br>☆ +5.2 V DC | • Adjust the voltage to be as specified. |
| A-2 | –5 V supply voltage check | | ◎ TP2 [PS]<br>☆ –5.1 V ± 0.2 V | • Confirm that the voltage meets the specifications. |
| A-3 | +20 V<br>–10 V<br>+9 V<br>supply voltages check | | ◎ TP27 [Extension board]<br>☆ +20 V ± 0.5 V DC<br>----------<br>◎ TP28 [Extension board]<br>☆ –10 V ± 0.5 V DC<br>----------<br>◎ TP29 [Extension board]<br>TP30 [Extension board]<br>☆ +9 V ± 0.2 V DC | 1) Extend the PS board with the extension board.<br>2) Confirm that every voltage meets the specifications. |

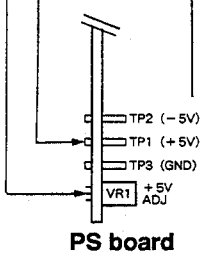

| No. | Item | Measuring instruments & Input signals | Measuring point ( ◎ )<br>Adjustment parts ( ⓣ )<br>Adjustment level ( ☆ ) | Adjustment procedure |
|---|---|---|---|---|

### 3.7 ADJUSTMENT OF ENCODER

**Note:** • When proceeding to adjust the following items without a vectorscope, perform the item No. 2 "Bar level check" and the item No. 3 "Carrier balance adjustment" only.
• The encoder of this model is not equipped with any Y level adjusting VR.

**1 Preparation**

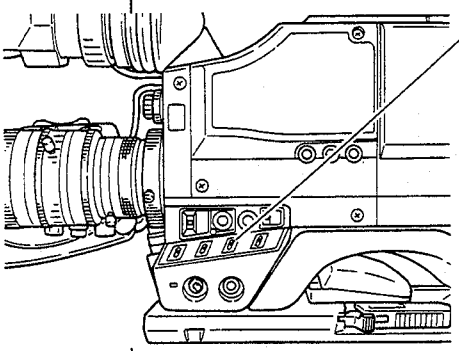

1) Set the MODE switch to "BARS" to output color bars signal.
2) Connect an oscilloscope's probe to the VIDEO OUTPUT terminal with a 75 Ω terminator.

**2 Bar level check**

• Oscilloscope (H-rate, 10 : 1) or WFM
• Color bars output

◎ VIDEO OUTPUT (with 75 Ω terminator)
**Note:** This model has no Y, SYNC and SETUP adjusting VRs.

| ☆ | NTSC | PAL |
|---|---|---|
| Y | 100IRE (0.714 Vp-p) | 100% (0.7 Vp-p) |
| SYNC | 40 IRE (0.286 Vp-p) | 0.3 Vp-p |
| SETUP | 7.5IRE (53 mVp-p) | |

1) Confirm that respective levels meet the specfications. If not, it mostly results from that the coaxial cable is too long or the resistance of the 75Ω terminator is incorrect.

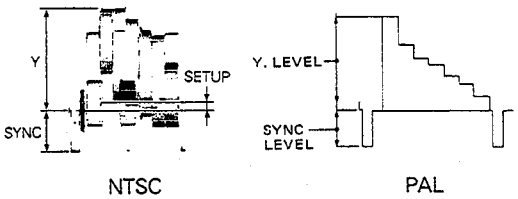


**3 Carrier balance adjustment**

◎ VIDEO OUTPUT (with 75 Ω terminator)
ⓣ R-Y C. BAL (VR3) [SE]
ⓣ B-Y C. BAL (VR2) [SE]
☆ Minimum carrier leak

1) Alternately turn the VRs to minimize carrier leak in white and black portions.

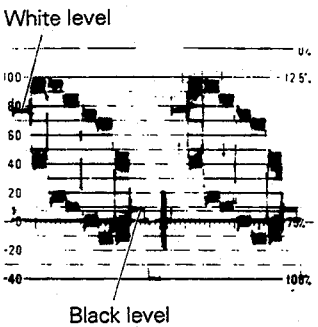


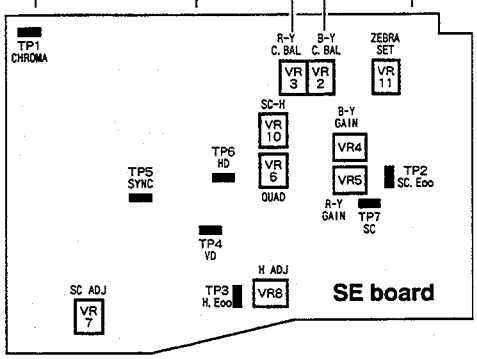


**● When vectorscope is used:**
1) Set vectorscope's GAIN control to MAX. position.
2) Turn C. BAL VRs alternately to position the spots in the center.

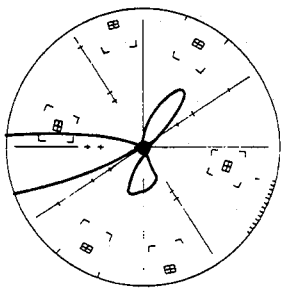

| No. | Item | Measuring instruments & Input signals | Measuring point ( ◎ )<br>Adjustment parts ( ⓣ )<br>Adjustment level ( ☆ ) | Adjustment procedure |
|---|---|---|---|---|
| 4 | Chroma signal adjustment | • Vectorscope<br>• Color bars output | ◎ VIDEO OUTPUT<br>(with 75 Ω terminator)<br>ⓣ B-Y GAIN (VR4) [SE]<br>ⓣ R-Y GAIN (VR5) [SE]<br>ⓣ QUAD (VR6) [SE] | 1) Set a vectorscope's GAIN control to the "CAL" or 75% position (preset position).<br>2) Alternately turn the VRs to position all spots (R, G, B, Mg, Cy, Yl) in the specified points respectively. |
| 5 | Burst level check | | ◎ VIDEO OUTPUT<br>(with 75 Ω terminator)<br><br>**Note:** This model has no BURST level adjusting VR. | 1) Check burst level.<br><br>*When burst level is out of the specifications, check if the axial cable has a proper length (not too long) or it is correctly terminated. |

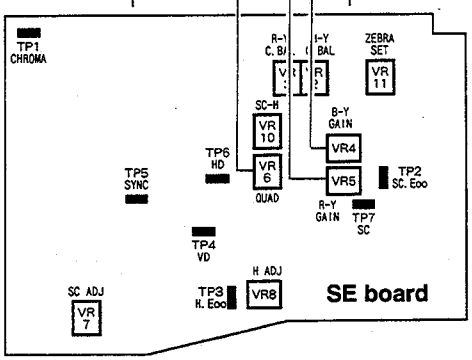


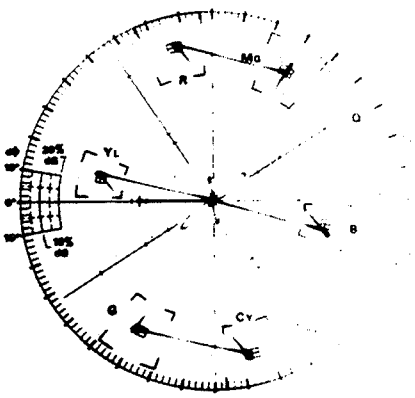

NTSC

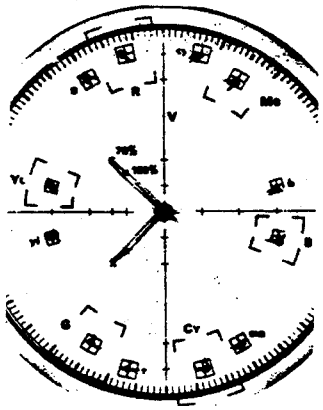

PAL

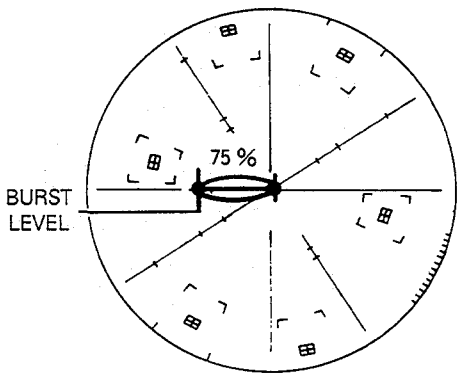


NTSC

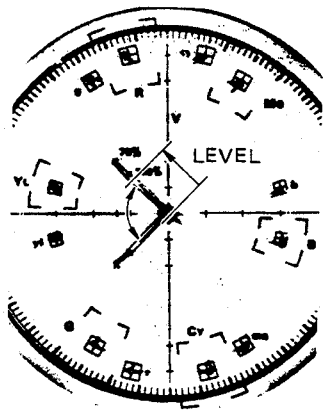


PAL

| No. | Item | Measuring instruments & Input signals | Measuring point ( ◎ )<br>Adjustment parts ( ⓣ )<br>Adjustment level ( ☆ ) | Adjustment procedure |
|---|---|---|---|---|

## 3.8 ADJUSTMENT OF BLACK BALANCE

**1 Preparation**

Lens : Capped

1) Set the CHECK switch on the CP1 board to "ON" for check mode.

CHECK switch

BLACK ADJUST ON/OFF switch:
Set to ON or OFF in accordance with adjusting purpose.
OFF: To decline black level (PR2 board output) with black slice activated (normal operation).
ON : To increase black level with black slice inactivated (adjusting mode).

2) Set up the camera as follows.
- MODE switch: Set to "CAM" position.
- Lens : Close with lens cap.
  (When lens cap is unavailable, set the iris to "C" [close].)

**2 G channel black balance adjustment**

Black adjusting mode

◎ TP2 [PR2]
ⓣ G BLACK BAL (VR2) [PA]
☆ Non-fluctuation in black level

" ON "

Oscilloscope (DC range)

1) Change the GAIN switch setting between " • " (0 dB) and " ••• " (+18 dB) while adjusting the VR so that the center of noise does not rectilinearly fluctuate.

Not to fluctuate rectilinearly.

2) Return the GAIN switch to " • " position.

**Black adjusting mode**

◎ TP5 [PR2]
ⓣ G BLACK (VR9) [PR2]
☆ Center of noise coincides with blanking.

" OFF "

3) Accord the center of video noise with the blanking period.

NO GOOD

NO GOOD

4) Repeat the above steps 1) through 3) several times.

| No. | Item | Measuring instruments & Input signals | Measuring point ( ◎ )<br>Adjustment parts ( ⓣ )<br>Adjustment level ( ☆ ) | Adjustment procedure |
|---|---|---|---|---|
| 3 | B, R channel black balance adjustment | • Oscilloscope (H-rate, 10 : 1)<br>• Black adjusting mode | ◎ VIDEO OUTPUT (with 75 Ω terminator)<br>ⓣ B BLACK (VR7) [PR2]<br>ⓣ R BLACK (VR11) [PR2]<br>☆ Black carrier leak : Minimum<br>ⓣ B BLACK BAL (VR1) [PA]<br>ⓣ R BLACK BAL (VR3) [PA]<br>☆ Black carrier leak : Minimum | 1) Minimize carrier leak.<br>Minimum carrier leak<br>2) Set the GAIN switch setting to " ••• " (+18 dB) and minimize carrier leakage.<br>3) Change the GAIN switch setting between " • " (0 dB) and " ••• " (+18 dB) while confirming carrier leak minimized in respective settings. If carrier leak happens to increase, repeat the above steps 1) and 2).<br>4) Reset the GAIN switch to " • " (0 dB). |
| 4 | Offset voltage adjustment | • Viewfinder<br>• Black adjusting mode | ◎ Viewfinder display<br>ⓣ AD OFFSET (VR5) [CP]<br>☆ Displayed value : "0" | 1) Set the displayed value to "0". |

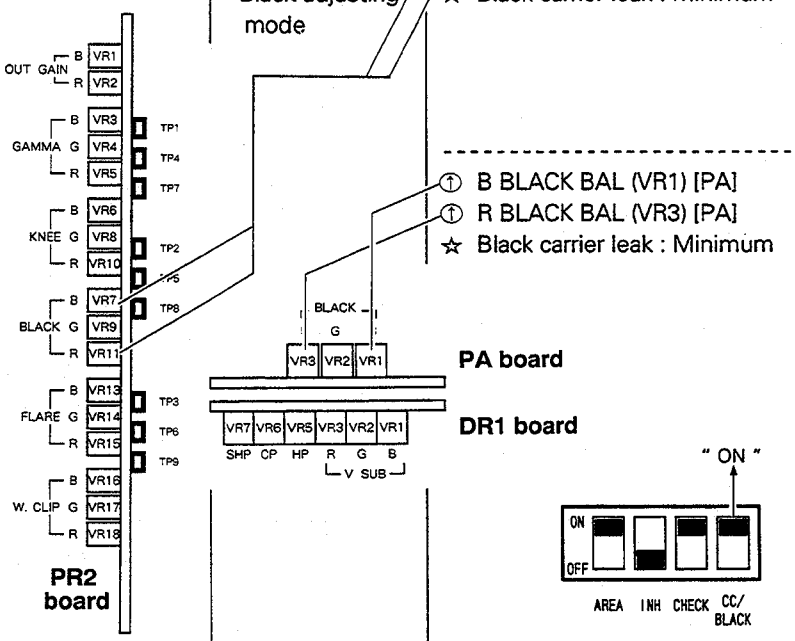


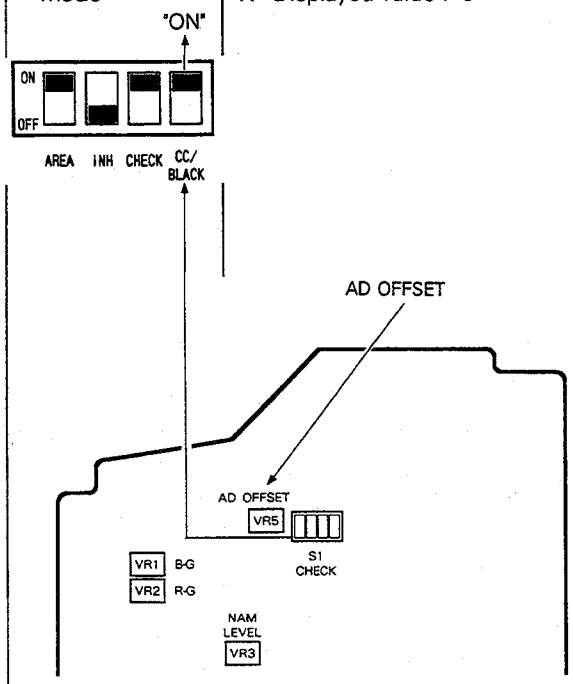


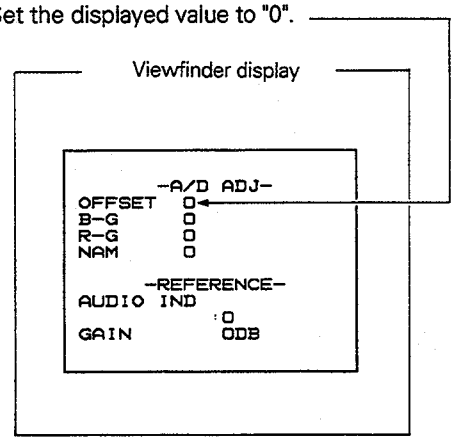

| No. | Item | Measuring instruments & Input signals | Measuring point ( ◎ )<br>Adjustment parts ( ⓣ )<br>Adjustment level ( ☆ ) | Adjustment procedure |
|---|---|---|---|---|

### 3.9 ADJUSTMENT OF INPUT GAIN (Setting of input signal level)

Note: • After completing this input gain adjustment, do not disturb the lens iris until the R/B gain setting is finished.

• Lighting should be set in the following conditions.

1) Adjust illumination of the lighting so that the lens iris is set to F5.6 or larger stop position with input signal level is 100% (the lens with extender should be set to X1).
2) Illumination must be uniform on the camera subject.
3) All of these adjustments should be performed in the check mode.
   - Set CHECK switch on CP board to "ON".
   - Set BLACK ADJUST switch to "OFF".

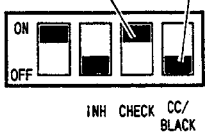


4) Set the IRIS MODE switch of the lens to "M" for manual mode.

Connect oscilloscope to TP1 of PR1 board, and adjust illumination so that video signal waveform observed at V-rate is flat.

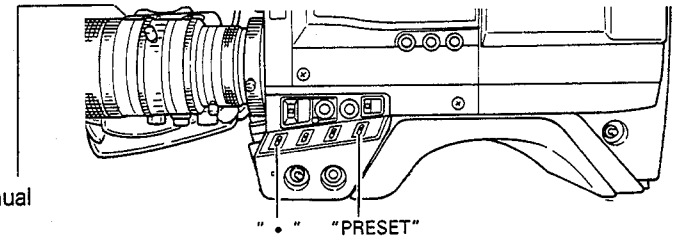


| | | | | |
|---|---|---|---|---|
| 1 | Preparation | | ⓣ B KNEE (VR6)<br>ⓣ G KNEE (VR8)<br>ⓣ R KNEE (VR10)<br>ⓣ B W. CLIP (VR16)<br>ⓣ G W. CLIP (VR17)<br>ⓣ R W. CLIP (VR18)<br>} [PR2]<br>☆ Full counterclockwise position | 1) Turn all of the VRs fully counterclockwise (↺) to releas the knee and white clip from controls.<br> 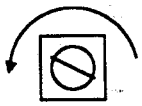 |
| 2 | Iris setting | • Oscilloscope (H-rate, 10 : 1)<br>• Gray scale chart<br> 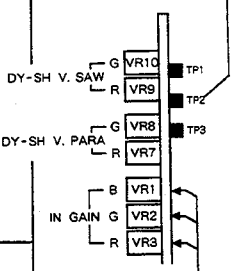 <br> | ◎ TP2 [PR1]<br>ⓣ Lens iris<br>☆ 0.6 Vp-p | 1) Confirm that every switch of the camera is set to the standard position (see page 3-3). Particularly confirm the following settings.<br>W. BAL switch : "PRESET"<br>GAIN switch : " • "<br>2) Shoot a gray scale chart while adjusting the lens iris to obtain the specified level.<br> <br> |
| 3 | Input gain adjustment | PR1 board<br>IN GAIN<br> 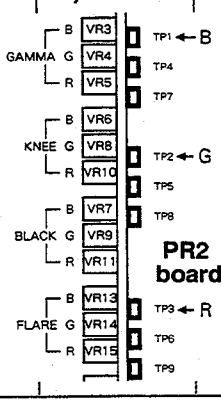 <br> | • B channel<br>☆ TP1 [PR2]<br>ⓣ B IN GAIN (VR1) [PR1]<br>☆ 1.2 Vp-p<br>- - - - - - - - - -<br>• G channel<br>☆ TP2 [PR2]<br>ⓣ G IN GAIN (VR2) [PR1]<br>☆ 1.2 Vp-p<br>- - - - - - - - - -<br>• R channel<br>☆ TP3 [PR2]<br>ⓣ R IN GAIN (VR3) [PR1]<br>☆ 1.2 Vp-p | 1) Confirm that input gain meets the specified level in respective channels. If there is incorrect gain, adjust it.<br> 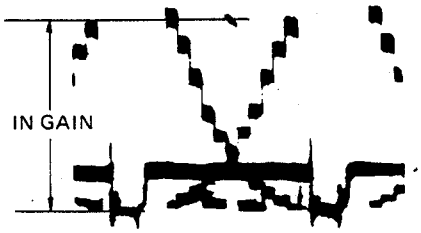 <br> |

| No. | Item | Measuring instruments & Input signals | Measuring point ( ◎ )<br>Adjustment parts ( ⓣ )<br>Adjustment level ( ☆ ) | Adjustment procedure |
|---|---|---|---|---|

### 3.10 ADJUSTMENT OF VIDEO LEVEL

Note: • This adjustment must follow "3.9 ADJUSTMENT OF INPUT GAIN".
Make sure to proceed to this adjustment after completing the input gain adjustment.

**1 — G channel Gain & Gamma adjustment**

• Gray scale chart
↓
Just scan
• Oscilloscope
(H-rate, 10 : 1)

◎ TP8 [PR2]

• White peak
ⓣ G OUT GAIN (VR1) [CC]
☆ 1.4 Vp-p

• Cross point
ⓣ G GAMMA (VR4) [PR2]
☆

| | |
|---|---|
| NTSC | 0.73 Vp-p |
| PAL | 0.78 Vp-p |

1) Adjust levels to the specified values.

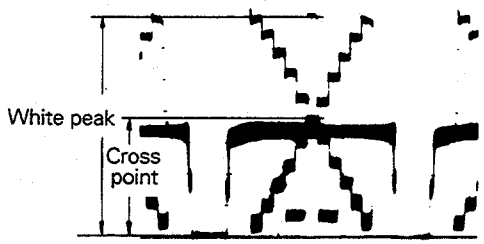


**2 — R/B channel Gain & Gamma adjustment**

◎ VIDEO OUTPUT
(with 75 Ω terminator)

ⓣ B OUT GAIN (VR1) [PR2]
ⓣ R OUT GAIN (VR2) [PR2]

ⓣ B GAMMA (VR3) [PR2]
ⓣ R GAMMA (VR5) [PR2]

◎ VIDEO OUTPUT
☆

| | |
|---|---|
| NTSC | 0.714 Vp-p |
| PAL | 0.7 Vp-p |

2) Adjust VRs for minimum video white level as well as for minimum carrier at cross point.

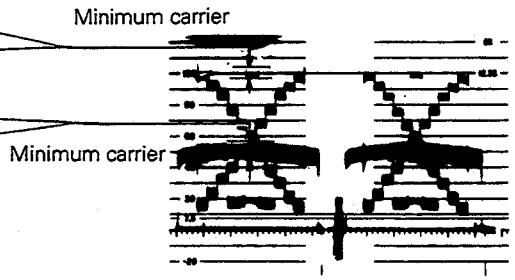


3) At that time, make sure to confirm that white peak accords with the specified level. If not, repeat the above steps 1) and 2).

**3 — High gain adjustment**

◎ TP2 [PR1]
ⓣ Lens iris
☆ 0.2 Vp-p

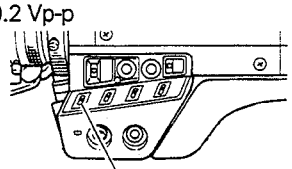

1) Adjust the lens iris to obtain the specified value.

◎ TP2 [PR2]
ⓣ G HI GAIN (VR5) [PR1]
☆ 1.2 Vp-p

2) Set the GAIN switch to " •• " (+9 dB).
3) Adjust to obtain the specified level.

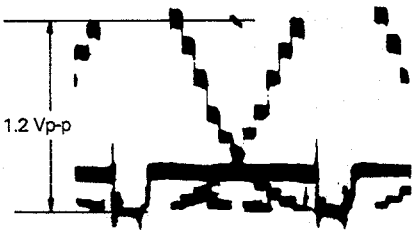

| No. | Item | Measuring instruments & Input signals | Measuring point ( ◎ )<br>Adjustment parts ( ⓣ )<br>Adjustment level ( ☆ ) | Adjustment procedure |
|---|---|---|---|---|
| 3 | 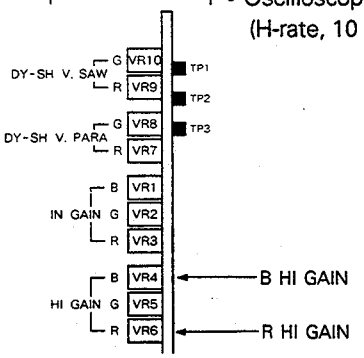 <br>**PR1 board** | • Gray scale chart<br>↓<br>Just scan<br>• Oscilloscope<br>(H-rate, 10 : 1) | ◎ VIDEO OUTPUT<br>(with 75 Ω terminator)<br>ⓣ B HI GAIN (VR4) [PR1]<br>ⓣ R HI GAIN (VR6) [PR1]<br>☆ Carrier leak : Minimum | 4) Minimize carrier leak in the white portion of the gray scale chart.<br> 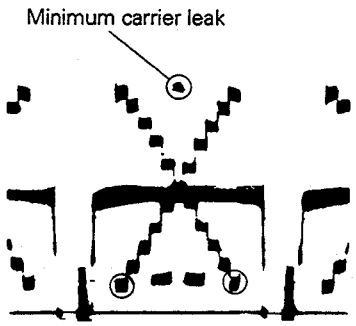 <br>5) Return the GAIN switch to " • " (0 dB) position. |
| 4 | G/R channel DC balance adjustment | • Lens : Capped<br>• Oscilloscope<br>(H-rate, 10 : 1) | • G channel<br>◎ TP2 [PR2]<br>ⓣ G DC BAL (VR12) [PR1]<br>ⓣ G DY V SAW (VR10) [PR1]<br>----------<br>• R channel<br>◎ TP3 [PR2]<br>ⓣ R DC BAL (VR13) [PR1]<br>ⓣ R DY V SAW (VR9) [PR1]<br>----------<br>GAIN switch : " ••• " position<br> 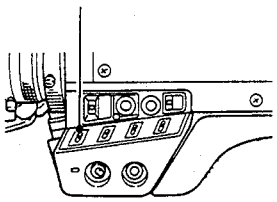 | 1) Close the lens with the lens cap. If lens cap is unavailable, close the lens iris to the extent.<br>2) Set the GAIN switch to " ••• " (+18 dB).<br>3) Turn the DY V SAW VR fully clockwise and counterclockwise while adjusting the DC BAL VR not to generate static shading (slant black waveform) on G and R channels respectively.<br> 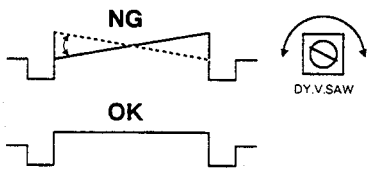 |
| 5 | B channel DC balance adjustment<br> | • Color TV monitor<br>Window chart | • B channel<br>◎ VIDEO OUTPUT<br>ⓣ B DC BAL (VR11) [PR1]<br>☆ Streaking : Minimum | Note: If the lens iris is closed in the previous item, reset it referring to "3.9 Adjustment of Input Gain" on page 3-13.<br>4) Set the VR to the mechanical center position.<br>5) Confirm no streaking appearing in the right side of the window chart.<br> 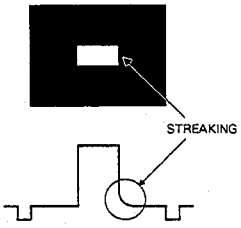 <br>6) If streaking is appearing, adjust the B DC BAL volume to minimize streaking.<br>7) Return the GAIN switch to " • " (0 dB) position. |

| No. | Item | Measuring instruments & Input signals | Measuring point ( ◎ )<br>Adjustment parts ( ⓣ )<br>Adjustment level ( ☆ ) | Adjustment procedure |
|---|---|---|---|---|
| 6 | Dynamic shading adjustment | • Gray scale chart<br>↓<br>Just scan<br>• Oscilloscope<br>(V-rate, 10 : 1)<br>or WFM | ◎ VIDEO OUTPUT<br>(with 75 Ω terminator)<br>ⓣ G DY V SAW (VR10) [PR1]<br>ⓣ G DY V PARA (VR8) [PR1]<br>ⓣ R DY V SAW (VR9) [PR1]<br>ⓣ R DY V PARA (VR7) [PR1]<br>☆ Carrier leak : Minimum | 1) Confirm that the GAIN switch is set to "•" (0 dB) position.<br>2) Minimize carrier leak. |
| 7 | Flare level adjustment | • Gray scale chart<br>↓<br>Just scan<br>• Oscilloscope<br>(H-rate, 10 : 1) | ◎ VIDEO OUTPUT<br>(with 75 Ω terminator)<br>ⓣ B FLARE (VR13) [PR2]<br>ⓣ G FLARE (VR14) [PR2]<br>ⓣ R FLARE (VR15) [PR2]<br>☆ NTSC: 80 mV (11IRE)<br>PAL: 40 mV | 1) Adjust the G GLARE VR so that the upper level of noise in the 1st step of the gray scale chart is specified value.<br>2) Minimize carrier leak by the B FLARE and R FLARE VRs. |

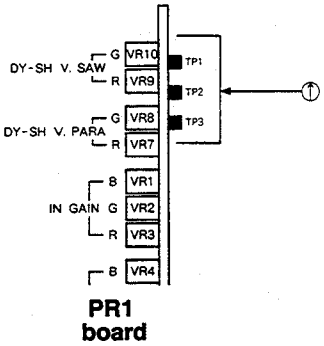


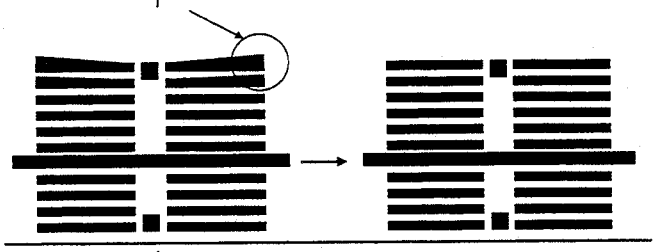

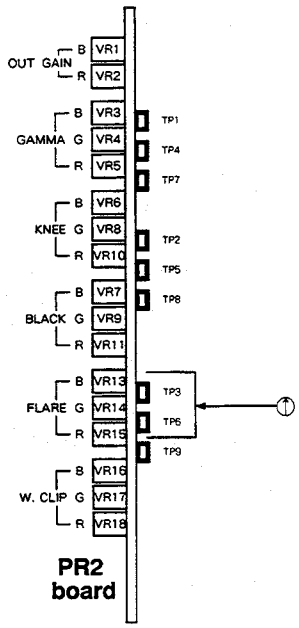


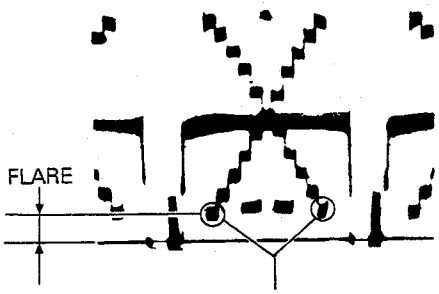

| No. | Item | Measuring instruments & Input signals | Measuring point ( ◎ )<br>Adjustment parts ( ⓣ )<br>Adjustment level ( ☆ ) | Adjustment procedure |
|---|---|---|---|---|

### 3.11 ADJUSTMENT OF KNEE SLOPE AND WHITE CLIP

**Note:**
- Make sure to proceed to this section after completing "3.10 Adjustment of Video Level".
- Turn on the CHECK switch on the CP1 board for the check mode. (During the check mode, the auto knee function is automatically turned off but the fixed knee is effectual.)
- Set the lens iris referring to "3.9 Adjustment of Input Gain, Item No. 2".

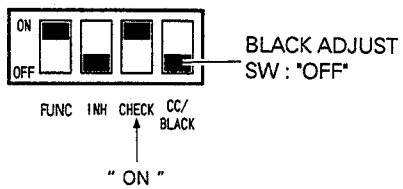


| | | | | |
|---|---|---|---|---|
| 1 | Knee point adjustment | • Gray scale chart<br>↓<br>Just scan<br>• Oscilloscope (H-rate, 10 : 1) or WFM | ◎ VIDEO OUTPUT (with 75 Ω terminator)<br>ⓣ G KNEE (VR8) [PR2]<br>☆ NTSC: 100IRE (0.714 Vp-p); PAL: 0.7 Vp-p<br>GAIN switch: " •• " position<br>ⓣ B KNEE (VR6) [PR2]<br>ⓣ R KNEE (VR10) [PR2]<br>☆ Carrier leak in white: Minimum | 1) Set the GAIN switch to " •• " (+9 dB) position.<br>2) Adjust the VR so that carrier's lower level in the white portion meets the specified value.<br>G KNEE<br>3) Alternately turn the VR13 and VR15 to minimize carrier leak in the white portion.<br>Minimum carrier leak |
| 2 | White clip adjustment | | ◎ VIDEO OUTPUT (with 75 Ω terminator)<br>ⓣ G W CLIP (VR17) [PR2]<br>☆ NTSC: 100IRE (0.785 Vp-p); PAL: 0.77 Vp-p<br>ⓣ B W CLIP (VR16) [PR2]<br>ⓣ R W CLIP (VR18) [PR2]<br>☆ Carrier leak in white: Minimum | 1) Set the GAIN switch to " ••• " (+18 dB) position.<br>2) Adjust the VR so that carrier's lower level in the white portion meets the specified value.<br>G. W. CLIP<br>3) Alternately turn the VRs to minimize carrier leak in the white portion.<br>4) If the clip level is not 0.785 Vp-p, repeat the above steps 1) through 3) to obtain 0.785 Vp-p (110 IRE).<br>5) Return the GAIN switch to " • " (0 dB) position. |

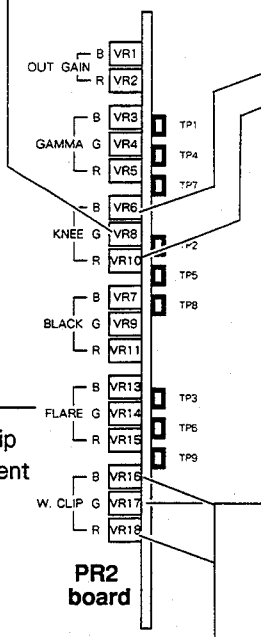

| No. | Item | Measuring instruments & Input signals | Measuring point ( ◎ )<br>Adjustment parts ( ① )<br>Adjustment level ( ☆ ) | Adjustment procedure |
|---|---|---|---|---|

### 3.12 ADJUSTMENT OF IRIS

Note:
- For proceeding to this section, it is the first condition that procedures of the sections 3.9 through 3.11 have been completed.
- Set the camera to the check mode for adjustment.
- Set the lens iris to "M" for manual operation.
- Set the GAIN switch to " • " (0 dB) position.

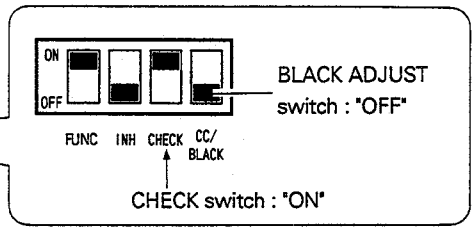


| | | | | |
|---|---|---|---|---|
| 1 | Preparation | • Gray scale chart<br>↓<br>Just scan<br>• Oscilloscope (H-rate, 10 : 1) | ◎ VIDEO OUTPUT (with 75 Ω terminator)<br>① Lens iris<br>☆ NTSC: 100IRE (0.714 Vp-p); PAL: 0.7 Vp-p | 1) Adjust the lens iris to obtain the specified value. |
| 2 | NAM value adjustment | | ◎ Viewfinder display<br>① NAM LEVEL (VR3) [CP]<br>☆ Set to "0" | NAM (No Additive Mix) signal is used as the reference signal to control the lens iris by the CPU.<br>2) Adjust the VR to set the value displayed in the viewfinder to "0". |
| 3 | Zebra display adjustment | | ◎ Viewfinder display<br>① ZEBRA SET (VR11) [SE]<br>☆ Zebra pattern appears in the 2nd sections from the top. | 3) Set the ZEBRA switch in the front part of the camera to "ON".<br>4) Adjust the VR so that zebra mark appears in the sections of the viewfinder display as shown in the figure below. |

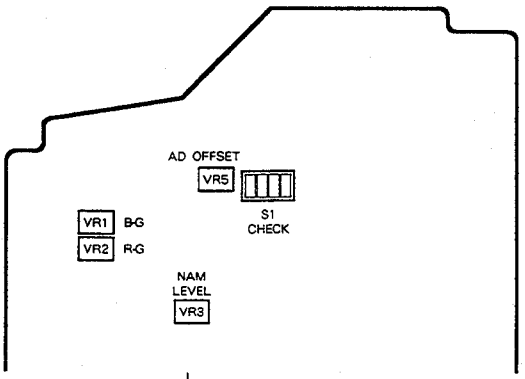


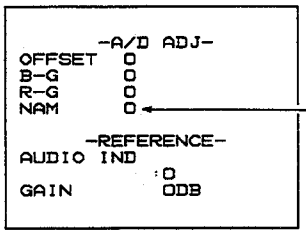


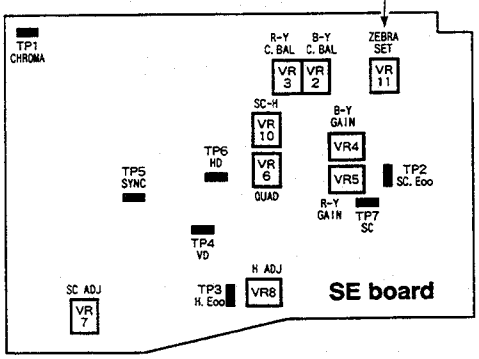


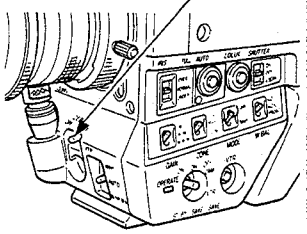

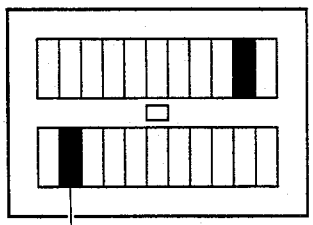

Zebra mark display in the 2nd sections from the white section.

| No. | Item | Measuring instruments & Input signals | Measuring point ( ◎ )<br>Adjustment parts ( ⓣ )<br>Adjustment level ( ☆ ) | Adjustment procedure |
|---|---|---|---|---|

### 3.13 ADJUSTMENT OF AUTO WHITE

Note:
- For proceeding to this section, it is the first condition that video level has been correctly adjusted by the procedures of the sections 3.9 through 3.11 besides the item No. 4 "Offset voltage adjustment" of the section 3.8 has been completed.
- Set the camera to the check mode for this adjustment. In the check mode, signal levels (B-G and R-G) detected on R, G and B channels are displayed in the viewfinder. With correct adjustment of the auto white and the auto black functions, the CPU operates to match detected B and R channel levels with the G channel level. Therefore, detection levels of respective channels must accord with each other in the condition that the white balance and the black balance of the camera are correctly adjusted. The purpose of this section is to accord B and R channel levels with G channel level.

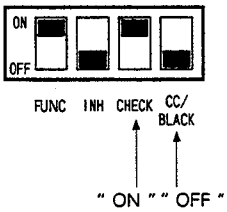


| | | | | |
|---|---|---|---|---|
| 1. | Preparation | • Gray scale chart<br>↓<br>Just scan<br>• Oscilloscope | ◎ VIDEO OUTPUT<br>(with 75 Ω terminator)<br>ⓣ Lens iris<br>☆ NTSC: 100IRE (0.714 Vp-p)<br>PAL: 0.7 Vp-p | 1) Adjust video level as specified. |
| 2 | Auto white adjustment | | ◎ Viewfinder display<br>ⓣ B-G (VR1) [CP]<br>ⓣ R-G (VR2) [CP]<br>☆ Display values : "0" | 2) Adjust VRs to set the displayed value to "0" respectively. |

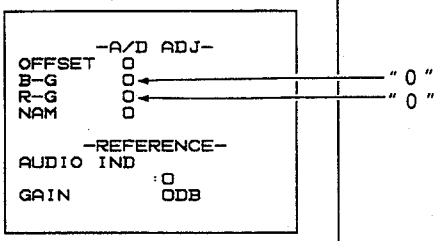


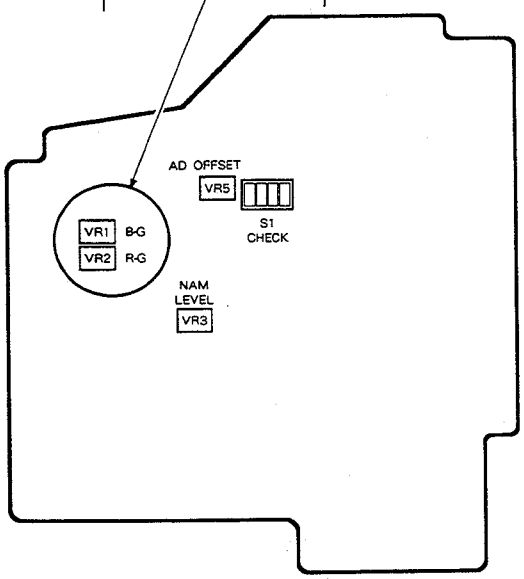

| No. | Item | Measuring instruments & Input signals | Measuring point ( ◎ )<br>Adjustment parts ( ⓣ )<br>Adjustment level ( ☆ ) | Adjustment procedure |
|---|---|---|---|---|

### 3.14 ADJUSTMENT OF CONTOUR CORRECTOR

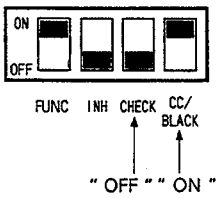


Note:
- For proceeding to this section, it is the first condition that video output level has been adjusted correctly by the procedures of the sections 3.9 through 3.11.
- Set the CHECK switch on the CP1 board to "OFF" for adjustment in the normal mode.
- Set the CC switch and the CONTOUR switch to "ON" before proceeding to do adjustment.

| | | | | |
|---|---|---|---|---|
| 1 | Preparation<br> 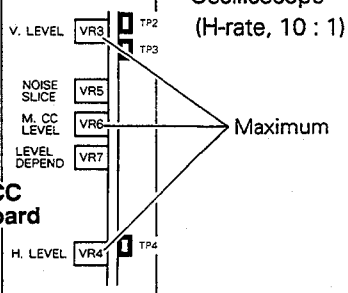 <br> | • Gray scale chart<br>↓<br>Just scan<br>• Oscilloscope<br>(H-rate, 10 : 1) | ◎ VIDEO OUTPUT<br>(with 75 Ω terminator)<br>ⓣ Lens iris<br>☆ 100% (white level of gray scale chart)<br>- - - - - - - -<br>ⓣ M CC LEVEL (VR6) [CC]<br>ⓣ V LEVEL (VR3) [CC]<br>ⓣ H LEVEL (VR4) [CC]<br>☆ Mechanical center position | 1) Confirm that all settings of the camera are in the normal state (see page 3-3). Particularly check the following switch settings.<br>W. BAL switch : "PRESET"<br>GAIN switch : " • " (0 dB)<br>2) Shoot the gray scale chart while adjusting the lens iris to obtain the specified level.<br>- - - - - - - -<br>3) Set respective VRs to the mechanical center position.<br>Note: This setting is not required for fine adjustment of V and H contour level only. Otherwise, proceed to the item 5 "V contour level adjustment". |
| 2 | V. zero balance adjustment | • Gray scale chart<br>↓<br>Just scan<br>• Oscilloscope<br>(V-rate, 10 : 1) | ◎ TP5 [CC]<br>ⓣ V CC BAL (VR2) [CC]<br>☆ Minimum video component<br> 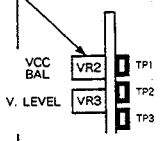 <br> | 4) turn the VCC BAL starting from the side of minimum video level and stop it when video signal just appears. (Minimum video level) At that time, confirm no level fluctuation in the video signal connected with the VIDEO OUTPUT terminal.<br>No good<br> 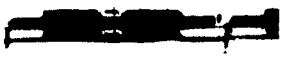 <br>Good<br> |
| 3 | Noise slice adjustment | • Oscilloscope<br>(H-rate, 10 : 1)<br>or WFM<br> 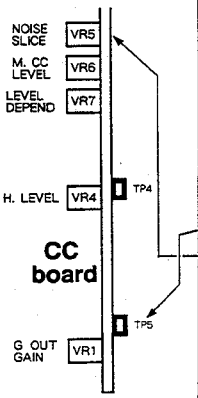 <br> | ◎ VIDEO OUTPUT<br>(with 75 Ω terminator)<br>ⓣ Lens iris<br>☆ 80% [NTSC: 0.57 Vp-p,<br>PAL: 0.56 Vp-p]<br>(white level of gray scale chart)<br>- - - - - - - -<br>ⓣ V LEVEL (VR3) [CC]<br>☆ Full clockwise position (MAX)<br>ⓣ H LEVEL (VR4) [CC]<br>☆ Full counterclockwise position (MAX)<br>- - - - - - - -<br>◎ TP5 [CC]<br>ⓣ NOISE SLICE (VR5) [CC]<br>☆ Contour level : 1/2 | 5) Adjust the lens iris to obtain the specified level.<br>- - - - - - - -<br>6) Set the VRs to specified position.<br>- - - - - - - -<br>7) Turn the NOISE SLICE VR fully clockwise (open) while checking contour level.<br>8) Adjust the NOISE SLICE VR to reduce the contour level to a half.<br> 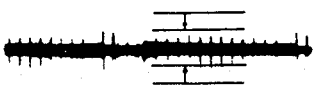 |

| No. | Item | Measuring instruments & Input signals | Measuring point ( ◎ )<br>Adjustment parts ( ⓣ )<br>Adjustment level ( ☆ ) | Adjustment procedure |
|---|---|---|---|---|
| 4 | Level dependence check | • Gray scale chart<br>↓<br>Just scan<br>• Oscilloscope<br>(H-rate, 10 : 1) | ◎ VIDEO OUTPUT<br>(with 75 Ω terminator)<br>ⓣ LEVEL DEPEND (VR7) [CC]<br>☆ Contour in the 1st black section disappears. | 8) Set the GAIN switch as follows.<br>U version : To " •• " (+9 dB) position<br>E version : To " ••• " (+18 dB) position<br>9) Adjust the VR so that the contour of the 1st step from the bottom of the gray scale chart disappears.<br> 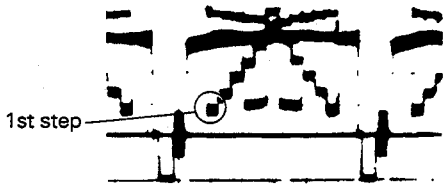 |
| 5 | V. contour level adjustment | • Oscilloscope<br>(V-rate, 10 : 1) | 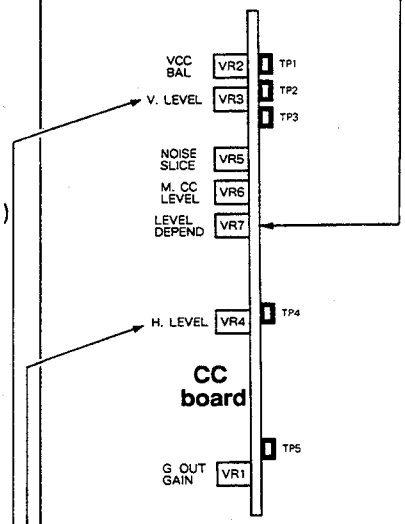 <br>◎ VIDEO OUTPUT<br>(with 75 Ω terminator)<br>ⓣ V LEVEL (VR3) [CC]<br>☆ NTSC: 0.13 Vp-p<br>PAL: 0.11 Vp-p | 10) Return the GAIN switch to " • " (0 dB) position.<br>11) Slowly move the camera up and down and set it where the window section of the gray scale chart has the same contour level.<br> 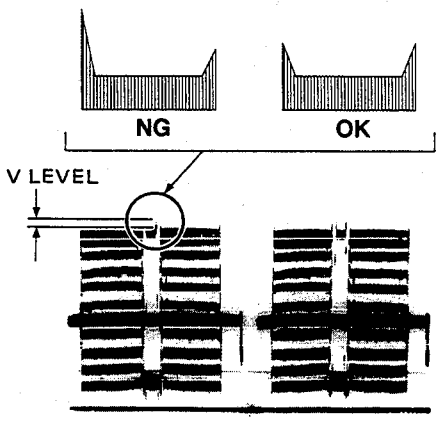 <br>12) Adjust the contour level as specified. |
| 6 | H. contour level adjustment | • In-megacycle chart<br>(JVC part No.: RESC-010)<br>↓<br>Just scan | ◎ VIDEO OUTPUT<br>(with 75 Ω terminator)<br>ⓣ H LEVEL (VR4) [CC]<br>☆ NTSC: 5 MHz amplitude = 0.5 MHz amplitude<br>PAL: Adjust amplitude of 5 MHz signal so that its ratio to that of 0.5 MHz signal becomes 120%. | 13) Adjust the lens iris so that the white level of 0.5 MHz signal is 80 IRE.<br>14) Observe encoder output by an oscilloscope (with 75 Ω terminator) while selecting the center line. Resultingly, the following waveform is observed.<br> 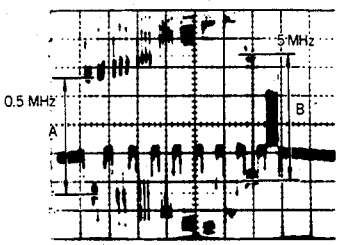 <br>In-megacycle chart<br>$\frac{B}{A}$ = 100% [NTSC]<br>$\frac{B}{A}$ = 120% [PAL]<br>15) Adjust the H LEVEL control (VR4) to the specified value. |

| No. | Item | Measuring instruments & Input signals | Measuring point ( ◎ )<br>Adjustment parts ( ⓣ )<br>Adjustment level ( ☆ ) | Adjustment procedure |
|---|---|---|---|---|

### 3.15 ADJUSTMENT OF SSG (Adjustment of internally synchronizing mode)

Note: • Warm up the camera for 15 minutes or more before adjustment.
• Frequency counter to be used must satisfy the following conditions.
1) 8 digits or more readable.
2) Stability higher than 0.1 ppm or $1 \times 10^{-7}$ at 0° C to 40° C.

| | | | | |
|---|---|---|---|---|
| 1 | SC frequency adjustment | • Frequency counter | ◎ TP7 [SE]<br>ⓣ SC ADJ (VR7) [SE]<br>☆<br>NTSC: 3.579545 MHz ± 5 Hz<br>PAL: 4.433619 MHz ± 5 Hz | 1) Adjust the frequency as specified. |
| 2 | SC-H timing adjustment (NTSC only) | | ◎ SC-H (VR10) [SE] | 1) Set the SC-H mechanically as shown in the figure. |
| | | Since this camera is unconformable to the RS-170A standard, SC-H timing is generally adjusted in such the mechanical way as described on the right. For setting the SC-H timing to conform to the RS-170A standard, proceed as follows. | | |
| | | • Oscilloscope (H-rate, 10 : 1)<br>• SSG capable of externally synchronizing and separately outputting subcarrier & H. sync signal | • VIDEO OUTPUT (Camera) ↓ (Genlock)<br>◎ SC OUTPUT (SSG)<br>◎ H OUTPUT (SSG)<br>ⓣ SC-H (VR10) [SE]<br>☆ Fall of H. SYNC accords with rise of SC. | 1) Connect the VIDEO OUTPUT terminal with the synchronizing input terminal (GENLOCK INPUT) of an SSG to synchronize video output.<br>2) Observe H. SYNC and SC (Sub carrier) outputs of the SSG while adjusting the phases of the SC output and the half point (20 IRE) of the H. SYNC output as shown below. |

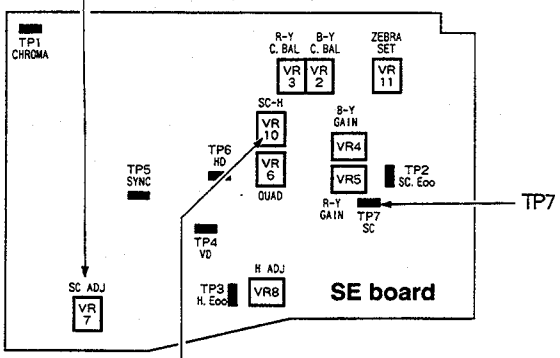

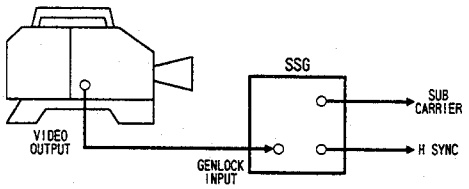


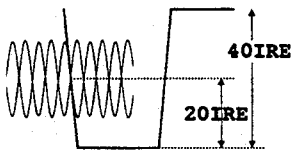

| No. | Item | Measuring instruments & Input signals | Measuring point ( ◎ )<br>Adjustment parts ( ⓣ )<br>Adjustment level ( ☆ ) | Adjustment procedure |
|---|---|---|---|---|

### 3.16 ADJUSTMENT OF SSG (Adjustment of externally synchronizing mode)

Note: • Proceed to this section in succession to the previous adjustment of internally synchronizing mode.
• Supply VBS or B.B. (black burst) signal to the camera's GENLOCK INPUT terminal from a video signal generator. Since input signal is terminated by 75 Ω resistance inside the camera, the oscilloscope has no need of termination.

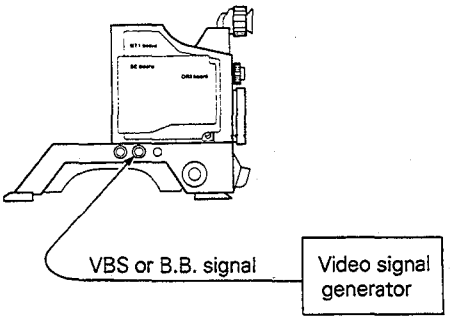


| | | | | |
|---|---|---|---|---|
| 1 | H. lock adjustment | • VBS or B.B. signal<br>• Digitalvoltmeter | ◎ TP3 [SE]<br>ⓣ H. ADJ (VR8) [SE]<br>☆ +2.5 V DC | 1) Adjust the VR to obtain the specified voltage. |

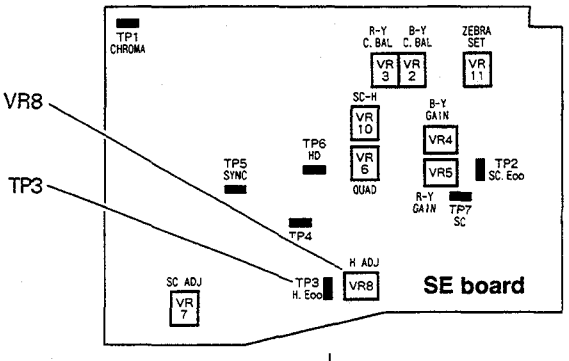


### 3.17 ADJUSTMENT OF COLOR MATRIX

| | | | | |
|---|---|---|---|---|
| 1 | Matrix adjustment | | ⓣ B-R (VR19) [PR2]<br>ⓣ B-G (VR20) [PR2]<br>ⓣ G-B (VR21) [PR2] | 1) Set respective VRs as shown below. |

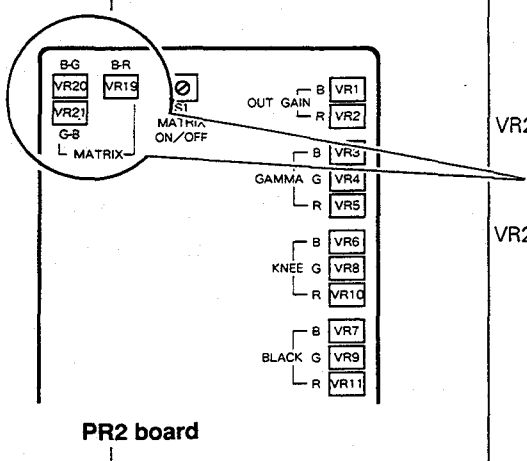


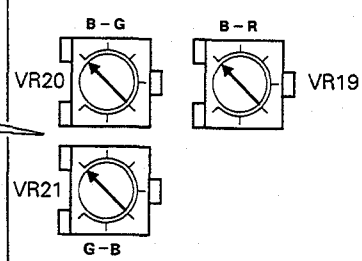

| No. | Item | Measuring instruments & Input signals | Measuring point ( ◎ )<br>Adjustment parts ( ⓣ )<br>Adjustment level ( ☆ ) | Adjustment procedure |
|---|---|---|---|---|

### 3.18 ADJUSTMENT OF CCD DRIVER AND TIMING GENERATOR

Note: • This adjustment is not required in general even after the optical block assembly is replaced.
• Accordingly, the following procedure is just a reference for the case the VRs concerned are erroneously disturbed.

| | | | | |
|---|---|---|---|---|
| 1 | Preparation | | | 1) Confirm that all settings of the camera are in the normal conditions (see page 3-3). |
| 2 | Error voltage adjustment | • Digitl voltmeter | ◎ TP1 [PR2]<br>ⓣ Eoo (VR1) [DR2]<br>☆ +2.5 V DC<br> 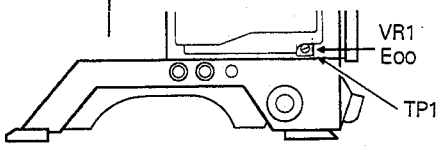 | 1) Adjust the voltage as specified. |
| 3 | Vsub voltage adjustment<br><br>(relating to blooming suppression voltage and dynamic range) | • Gray scale chart<br>↓<br>Just scan<br>• Oscilloscope<br>(H-rate, 10 : 1) | ⓣ G V SUB (VR2) [DR1]<br>☆ Full ounterclockwise position (↺)<br>◎ TP2 [PR1]<br>ⓣ Lens iris<br>☆ 2.40 Vp-p<br> 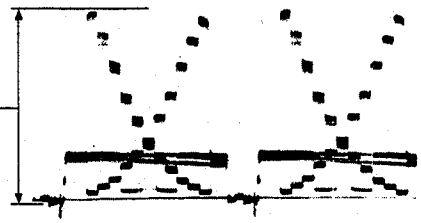 <br> 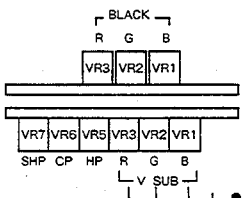 <br> 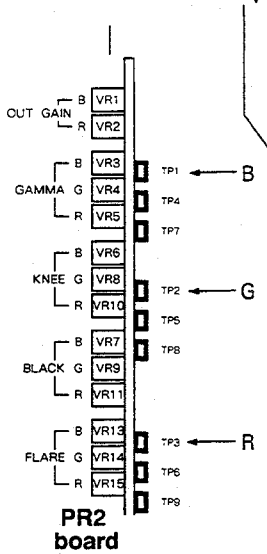 <br>• G channel<br>◎ TP2 [PR2]<br>ⓣ G V SUB (VR2) [DR1]<br>☆ Just before clipping of white level<br>---<br>• B channel<br>◎ TP1 [PR2]<br>ⓣ B V SUB (VR1) [DR1]<br>☆ Just before clipping of white level<br>---<br>• R channel<br>◎ TP3 [PR2]<br>ⓣ R V SUB (VR3) [DR1]<br>☆ Just before clipping of white level | 1) Turn the VR full counterclockwise ( ↺ ) to eliminate bloom-ing suppression voltage.<br>2) NTSC: Adjust the white peak of the gray scale chart to have the specified level.<br>PAL: Turn the iris ring from the open side to the close side while setting it at the point where signal becomes maximum for the first time after it was clipped.<br>3) Adjust the G. V SUB VR to the position just before the white level of the gray scale chart is clipped.<br>---<br>4) Without disturbing the lens iris, adjust the respective VRs to the position just before the white level of the gray scale chart is clipped. |

| No. | Item | Measuring instruments & Input signals | Measuring point ( ◎ )<br>Adjustment parts ( ⓣ )<br>Adjustment level ( ☆ ) | Adjustment procedure |
|---|---|---|---|---|
| 4 | Clamp timing adjustment | • Gray scale chart<br>↓<br>Just scan<br>• Oscilloscope<br>(H-rate, 10 : 1) | ◎ SHP (VR7) [DR1]<br>☆ Mechanical center position | 1) Set the SHP VR to the mechanical center position.<br>2) Turn the CP VR fully counterclockwise. |
| | | | ◎ VIDEO OUTPUT<br>(with 75 Ω terminator)<br>ⓣ CP (VR6) [DR1]<br>☆ Just before video level goes down | 3) Turn the CP VR clockwise and set it to the point where just before video level start decreasing. |
| 5 | Sample holding timing adjustment | • Lens Capped<br>• B/W TV monitor | ◎ VIDEO OUTPUT<br>(with 75 Ω terminator)<br>ⓣ SHP (VR7) [DR1]<br>☆ Non vertical and horizontal stripes | 4) Set the LOLUX switch to "ON" to set the camera to the LOLUX mode.<br>5) Turn the SHP VR fully counterclockwise.<br>6) Turn the SHP VR clockwise and adjust the SHP VR until neither of vertical and horizontal strips is observed without declining the video output. |
| 6 | Half pitch sampling timing adjustment | • In-megacycle<br>↓<br>Just scan<br>• Oscilloscope<br>(H-rate, 10 : 1) | ◎ VIDEO OUTPUT<br>(with 75 Ω terminator)<br>ⓣ HP (VR5) [DR1]<br>☆ Highest sensitivity | • Set the lens iris to "A" (auto) position.<br>• Set the CONTOUR ON/OFF switch on the CP1 board to "OFF".<br>1) Shoot the in-megacycle chart.<br>2) Observe the frequency response while adjusting the waveform so that its high frequency level becomes maximum.<br>3) Return the CONTOUR ON/OFF switch to "ON" position. |

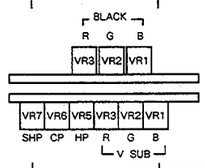


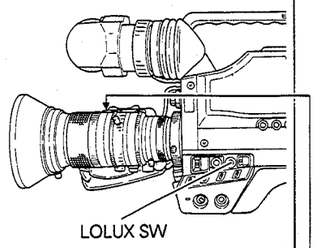


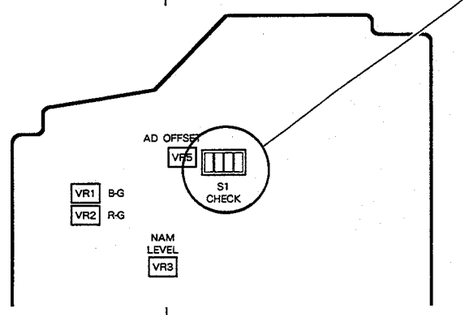


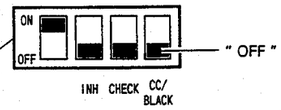


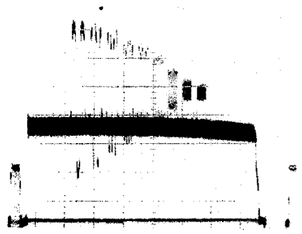

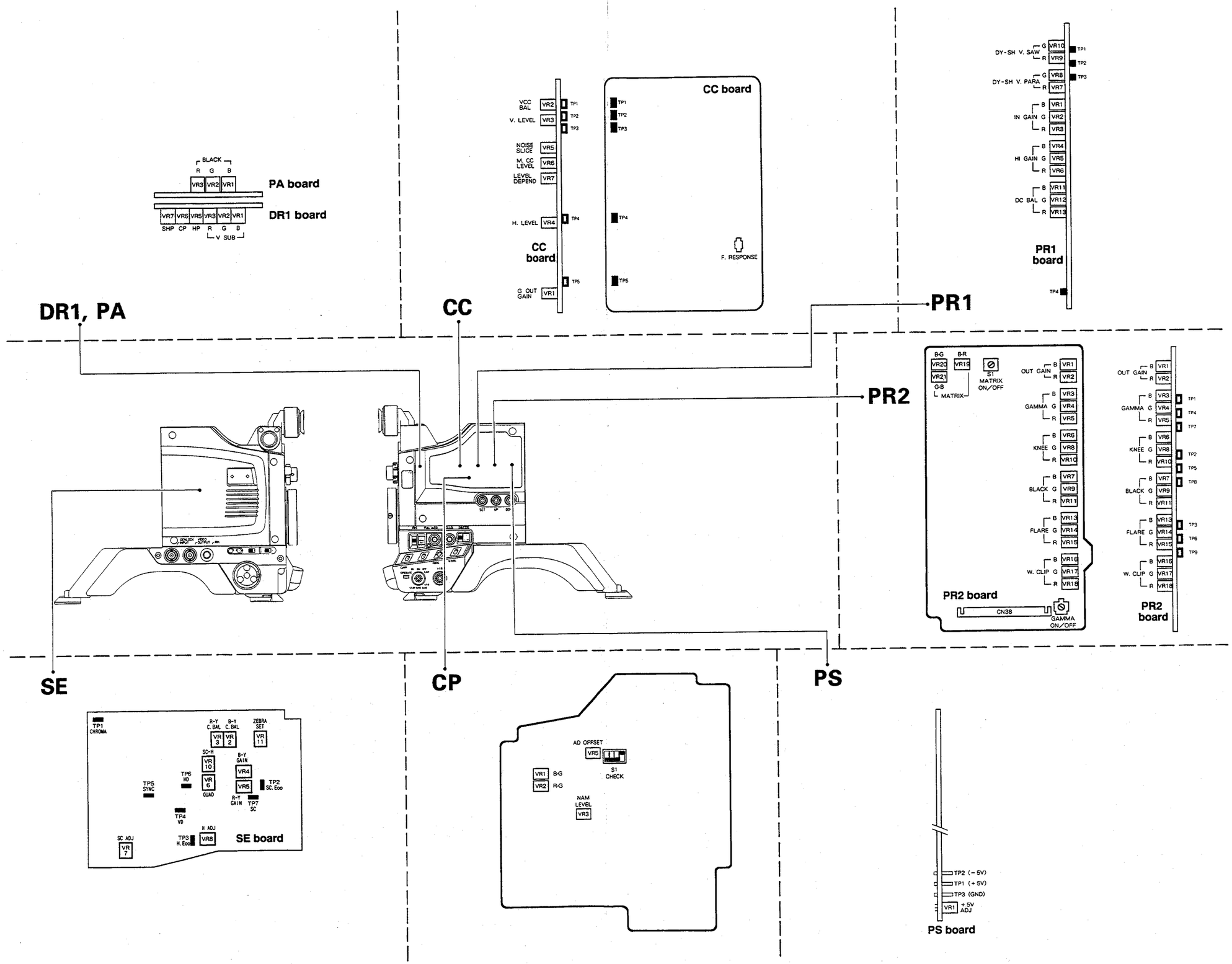
DR1, PA
CC
PR1
PR2
SE
CP
PS
PA board
DR1 board
BLACK
R G B
VR3 VR2 VR1
VR7 VR6 VR5 VR3 VR2 VR1
SHP CP HP R G B
V SUB
CC board
VCC BAL VR2 TP1
V. LEVEL VR3 TP2
TP3
NOISE SLICE VR5
M. CC LEVEL VR6
LEVEL DEPEND VR7
H. LEVEL VR4 TP4
G OUT GAIN VR1 TP5
F. RESPONSE
PR1 board
DY-SH V. SAW G VR10 TP1
R VR9 TP2
DY-SH V. PARA G VR8 TP3
R VR7
IN GAIN B VR1 G VR2 R VR3
HI GAIN B VR4 G VR5 R VR6
DC BAL B VR11 G VR12 R VR13
TP4
PR2 board
B-G VR20
B-R VR19
VR21 G-B
MATRIX
S1 MATRIX ON/OFF
OUT GAIN B VR1 R VR2
GAMMA B VR3 G VR4 R VR5
KNEE B VR6 G VR8 R VR10
BLACK B VR7 G VR9 R VR11
FLARE B VR13 G VR14 R VR15
W. CLIP B VR16 G VR17 R VR18
CN38
GAMMA ON/OFF
PR2 board
OUT GAIN B VR1 R VR2
GAMMA B VR3 G VR4 R VR5 TP1 TP4 TP7
KNEE B VR6 G VR8 R VR10 TP2 TP5 TP8
BLACK B VR7 G VR9 R VR11
FLARE B VR13 G VR14 R VR15 TP3 TP6 TP9
W. CLIP B VR16 G VR17 R VR18
TP1 CHROMA
R-Y C. BAL VR 3
B-Y C. BAL VR 2
ZEBRA SET VR 11
SC-H VR 10
B-Y GAIN VR4
TP6 HD
VR 5 QUAD
VR5
TP2 SC. Eoo
TP5 SYNC
R-Y GAIN
TP7 SC
TP4 VD
H ADJ VR8
SC ADJ VR 7
TP3 H. Eoo
SE board
AD OFFSET VR5
S1 CHECK
VR1 B-G
VR2 R-G
NAM LEVEL VR3
TP2 (−5V)
TP1 (+5V)
TP3 (GND)
VR1 +5V ADJ
PS board



3-25

# SECTION 4
# REPACKING

• **CAMERA HEAD REPACKING (FOR U VERSION)**

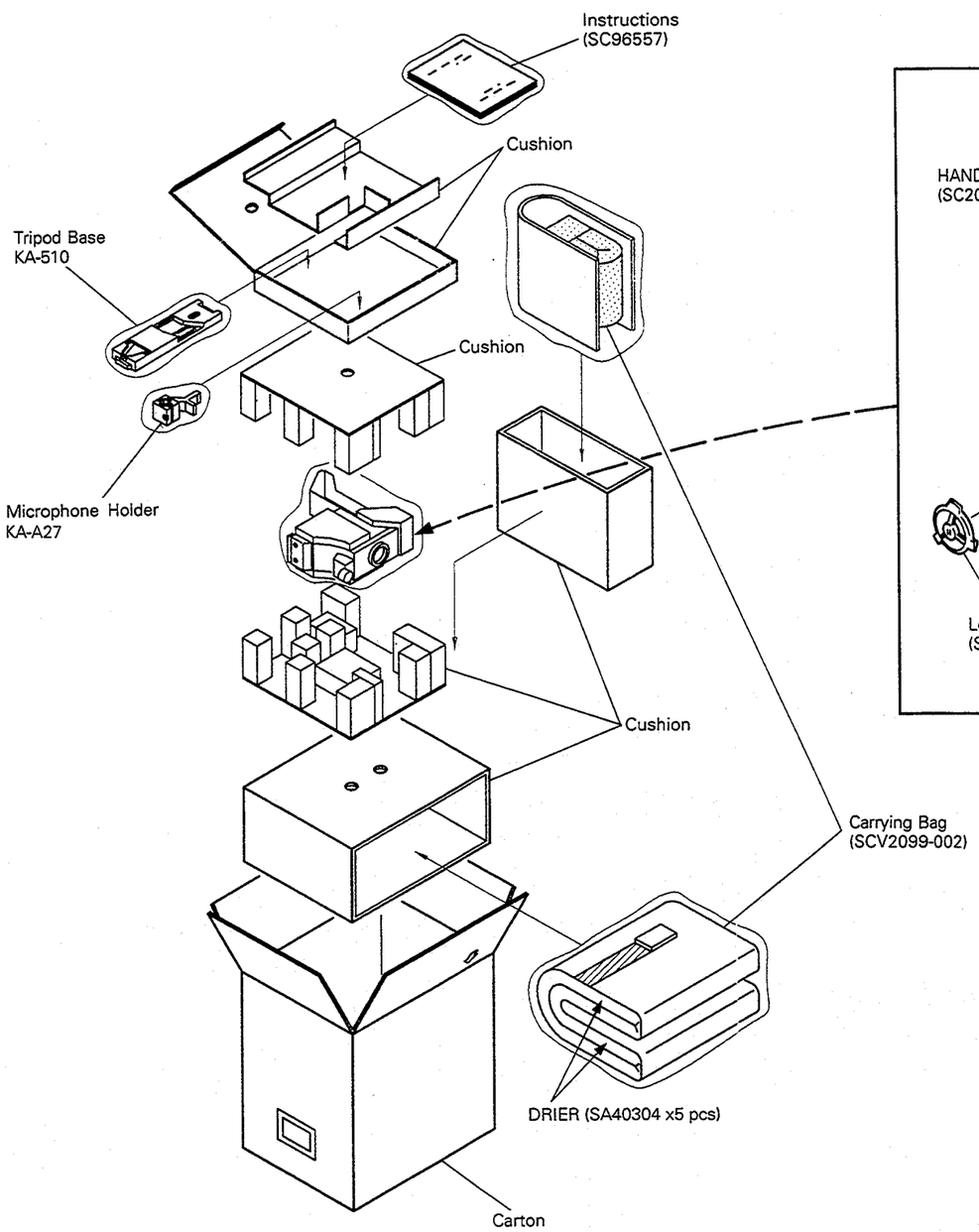


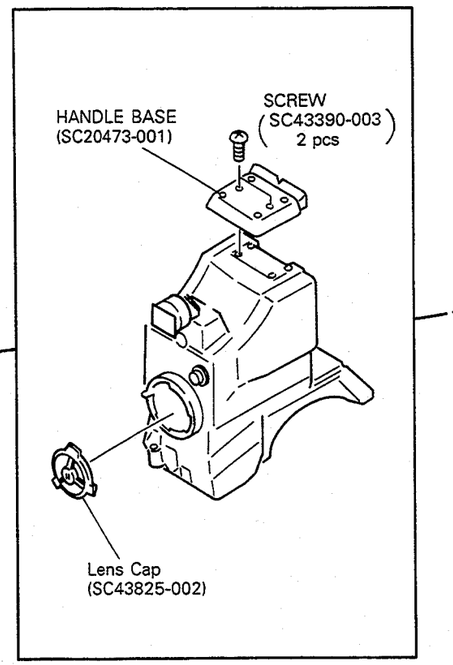


**NOTE: ACCESSORIES ARE SUBJECT TO CHANGE DEPEND ON SALES VERSIONS.**

• **CAMERA HEAD REPACKING (FOR E VERSION)**

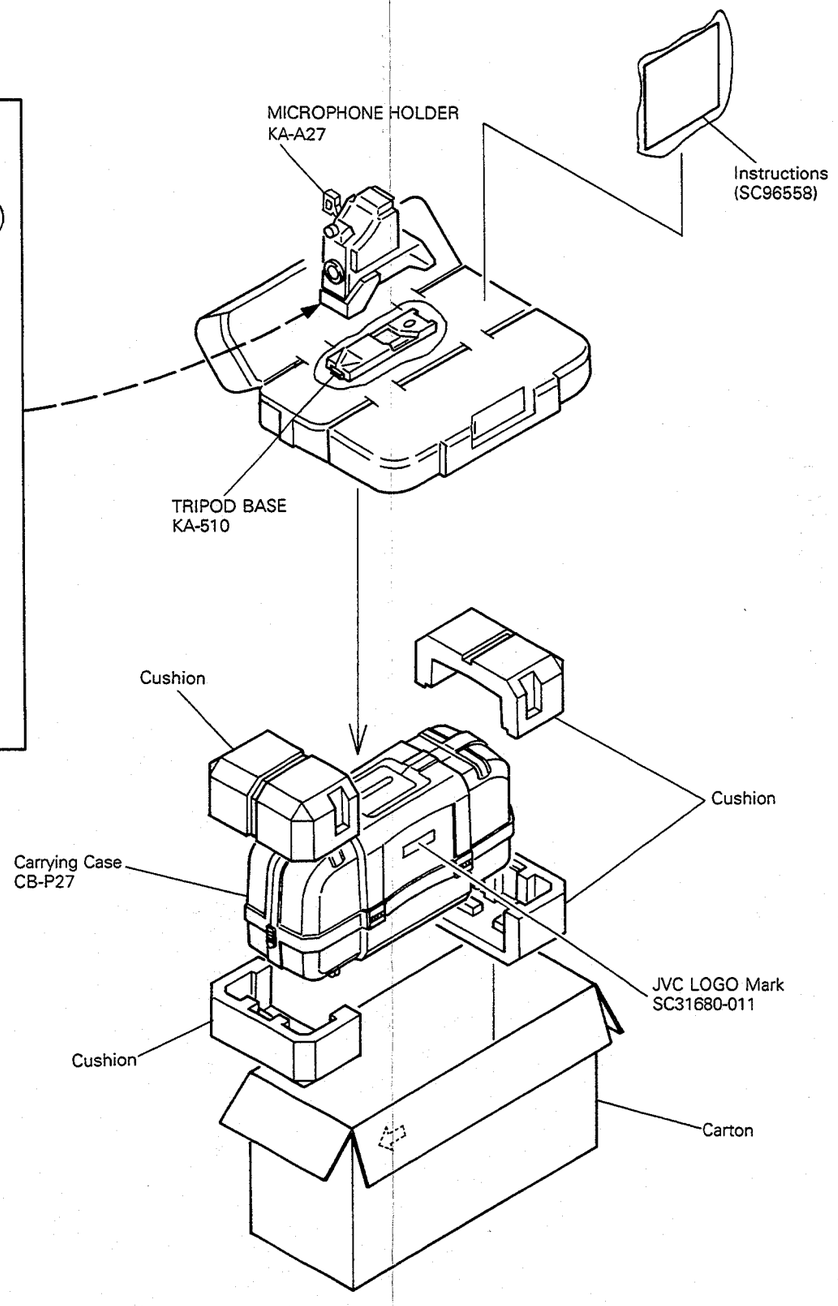


**NOTE: ACCESSORIES ARE SUBJECT TO CHANGE DEPEND ON SALES VERSIONS.**


4-1

# SECTION 5
# EXPLODED VIEWS AND PARTS LIST

## 5.1 COLOR VIDEO CAMERA ASSEMBLY

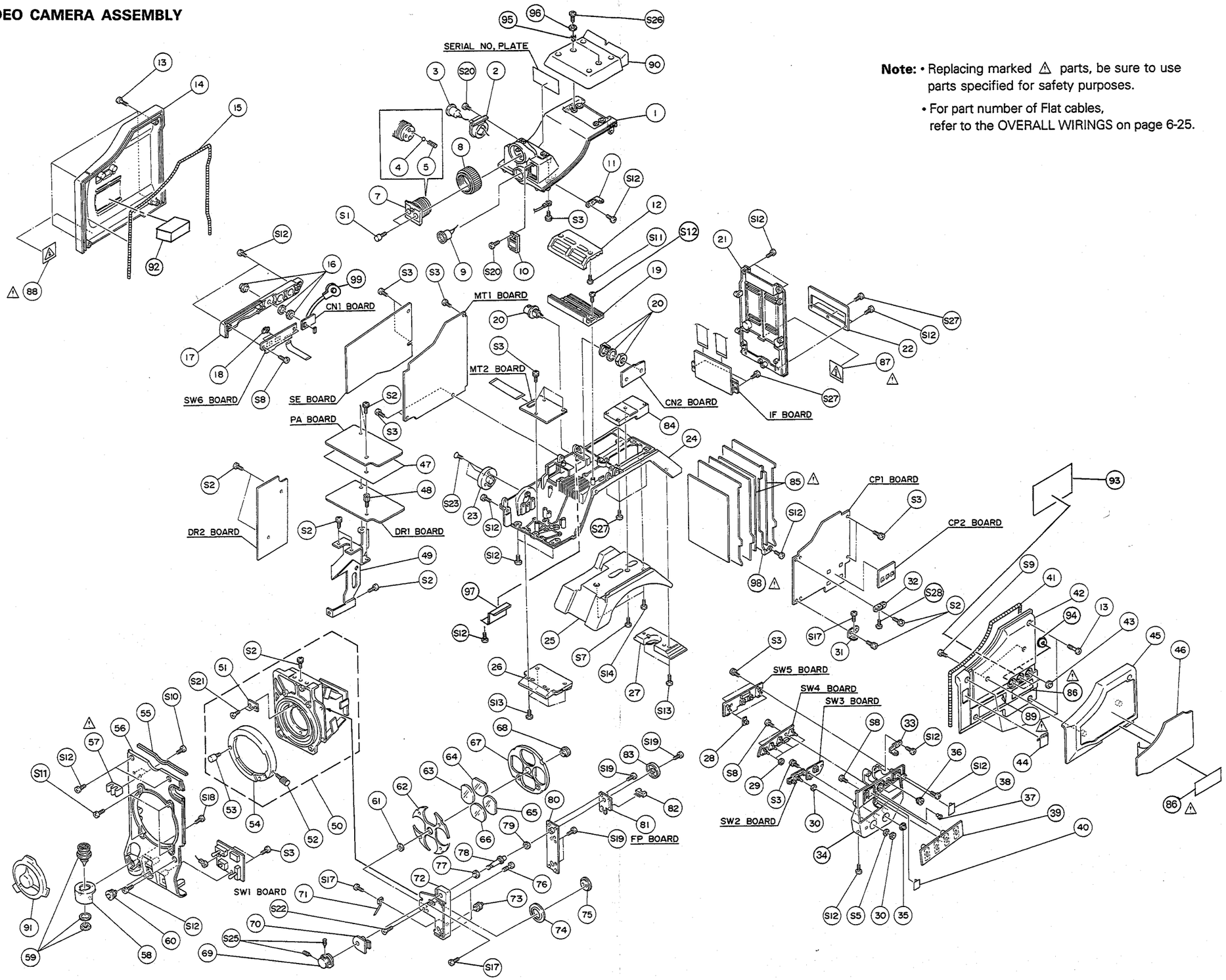


**Note:** • Replacing marked ⚠ parts, be sure to use parts specified for safety purposes.

• For part number of Flat cables, refer to the OVERALL WIRINGS on page 6-25.

● **Camera head assembly parts list** M1

M1MM

| Symbol No. | Part No. | Part Name | Description |
|---|---|---|---|
| 1 | SC10150-001 | TOP FRAME | |
| 2 | SC31490-001 | MIC CAP | |
| 3 | SCV0238-06S | CONNECTOR | |
| 4 | SC40465-045 | STEEL BALL | |
| 5 | SC45107-001 | SPRING | |
| 6 | — | — | |
| 7 | SC31489-002 | VF BASE | |
| 8 | SC45127-002 | VF RING | |
| 9 | SCV0238-06S | CONNECTOR | |
| 10 | SC45128-001 | FRONT COVER | |
| 11 | SC45120-011 | B.BRACKET(2) | CP1 BOARD |
| 12 | SC31487-001 | TOP RAIL | |
| 13 | SC43397-008 | SCREW | for SIDE COVER |
| 14 | SC10154-011 | SIDE COVER(L) | |
| 15 | SC44847-365 | SHIELD TUBE | |
| 16 | SCV1517-001 | CONNECTOR | RM CONNENCTOR |
| 17 | SC20474-002 | CN COVER | |
| 18 | SC44556-002 | KNOB | MIC RET SW |
| 19 | SC31488-001 | BOTTOM RAIL | |
| 20 | SCV0749-001 | BNC RECEPTACLE | GENLOCK INPUT, VIDEO OUTPUT |
| 21 | SC10149-001 | REAR FRAME(V) | |
| 22 | SC45125-001 | CN.PLATE | |
| 23 | SC40928-001 | LOCK GEAR | |
| 24 | SC10146-002 | BOTTOM FRAME | |
| 25 | SC10155-001 | SHOULDER PAD | |
| 26 | SC20479-001 | FRONT BASE | |
| 27 | SC31335-011 | REAR BASE | |
| 28 | SC43403-001 | KNOB | IRIS SHUTTER |
| 29 | SC45264-001 | RUBBER | for OPERATE SW |
| 30 | | refer to the SW2 board assembly | OPERATE SW |
| 31 | SC45119-001 | B.BRACKET(1) | CP1 |
| 32 | SC45119-011 | B.BRACKET(3) | CP1 |
| 33 | SC45120-011 | B.BRACKET(2) | CP1 |
| 34 | SC20472-002 | OPERATE COVER | |
| 35 | SC44828-001 | SWITCH CAP | VTR |
| 36 | SC44828-011 | KNOB | LOLUX FULL AUTO |
| 37 | SC43451-001 | LED LENS | FULL AUTO |
| 38 | SC45131-001 | STICKER | ON OFF V.SCAN |
| 39 | SC31491-001 | SWITCH PANEL | |
| 40 | SC45131-011 | STICKER | OVER NORM UNDER |
| ⚠ 41 | SC44847-365 | SHIELD TUBE | |
| 42 | SC10153-002 | SIDE COVER(R) | |
| 43 | SC44828-001 | SWITCH CAP | SET UP DOWN |
| 44 | SC45130-001 | STICKER | FILTER |
| 45 | SC20475-001 | CHEEK PAD | |
| 46 | SC45145-001 | PAD SHEET | |
| ⚠ 47 | SC44826-002 | SHIELD PLATE | for DR BOARD |
| 48 | SC44959-011 | STUD | |
| 49 | SC31486-001 | BRACKET | FOR DR1, DR2, PA BOARD |
| 50 | SCM0698-N0A | OPTICAL BLOCK ASS'Y | FOR U VERSION |
| | SCM0698-P0A | OPTICAL BLOCK ASS'Y | FOR E VERSION |
| 51 | SC44628-002 | LENS PLATE | |
| 52 | SC44704-002 | SCREW | |
| 53 | SC40779-001 | MOUNT SCREW | |
| 54 | SC31370-001 | MOUNT RING | |

| Symbol No. | Part No. | Part Name | Description |
|---|---|---|---|
| ⚠ 55 | SC44847-050 | SHIELD TUBE | |
| 56 | SC10151-002 | FRONT FRAME | |
| ⚠ 57 | SC42550-002 | CABLE CLAMPER | |
| 58 | SC44538-001 | LENS CAP | |
| 59 | SCV1938-12S | RECEPTACLE | |
| 60 | SC44828-011 | KNOB | VTR |
| 61 | Q03093-841 | WASHER | |
| 62 | SC45118-001 | F.SHEET | |
| 63 | SC44651-001 | FILTER | 3200K |
| 64 | SC44652-001 | FILTER | 5600K |
| 65 | SC44653-021 | FILTER | 5600K + 6.3%ND |
| 66 | SC45117-001 | FILTER | CROSS FILTER |
| 67 | SC31365-001 | FILTER WHEEL | |
| 68 | SC44649-001 | SHAFT | |
| 69 | SC31363-011 | FILTER KNOB | |
| 70 | SC44647-001 | GEAR HOLDER | |
| 71 | SC44627-001 | FILTER SPRING | |
| 72 | SC31316-002 | FILTER BASE | |
| 73 | SC44506-001 | FILTER STOPPER | |
| 74 | SC44505-001 | FILTER.I.GEAR | |
| 75 | SC44633-001 | FILTER.I.SHAFT | |
| 76 | SC43397-003 | SCREW | |
| 77 | SC44939-001 | SPASER | |
| 78 | SC44508-011 | FILTER SHAFT | |
| 79 | Q03093-819 | WASHER | |
| 80 | SC31364-004 | FILTER COVER | |
| 81 | SC83178-002 | FP BOARD | |
| 82 | SSV1591-S05 | CONNECTOR | |
| 83 | SC44676-005 | FILTER CAP ASSY | |
| 84 | SC31482-001 | VTR BASE(V) | |
| ⚠ 85 | SC41702-011 | SHEET | FOR (29) |
| ⚠ 86 | SC43658-001 | CAUTION LABEL | FOR U VERSION |
| ⚠ 86 | PU54392-1 | CAUTION LABEL | FOR E VERSION |
| ⚠ 87 | SC41957-012 | CAUTION LABEL | |
| ⚠ 88 | SC43948-001 | CAUTION LABEL | |
| ⚠ 89 | – | CAUTION LABEL | UL LABEL (QZL1001-012) |
| 90 | SC20473-002 | HANDLE BASE | |
| 91 | SC43825-002 | LENS CAP | |
| 92 | SC45273-001 | CUSHION | |
| 93 | SC45270-001 | LABEL | VR LOCATION |
| 94 | SC43650-001 | SHEET | |
| 95 | SC45195-001 | SPRING | |
| 96 | Q03093-817 | WASHER | |
| 97 | SC45276-001 | COVER | |
| ⚠ 98 | SC45121-001 | SHIELD PLATE | PS BOARD |
| ⚠ 99 | SC43876-008 | LUG WIRE ASS'Y | CONNECT TO CN13 PIN-1 |
| S1 | BYS4025M | BOLT | M4×25 |
| S2 | LPSP3004Z | SCREW | M3×4 |
| S3 | LPSP3006Z | SCREW | M3×6 |
| S5 | Q03091-202 | WASHER | |
| S7 | SC43390-002 | SCREW | |
| S8 | SDSF2606M | SCREW | M2.6×6 |
| S9 | SDSF3006M | SCREW | M3×6 |
| S10 | SDSP2006M | SCREW | M2×6 |
| S11 | SDSP3005M | SCREW | M3×5 |
| S12 | SDSP3006M | SCREW | M3×6 |

| Symbol No. | Part No. | Part Name | Description |
|---|---|---|---|
| S13 | SDSP3010M | SCREW | M3×10 |
| S14 | SDSP4008M | SCREW | M4×8 |
| S17 | SPSK2030M | SCREW | M2×3 |
| S18 | SPSK2040M | SCREW | M2×4 |
| S19 | SPSK2050M | SCREW | M2×5 |
| S20 | SPSK2640M | SCREW | M2.6×4 |
| S21 | SSSK2030M | SCREW | M2×3 |
| S22 | SSSK2050M | SCREW | M2×5 |
| S23 | SSSP3006M | SCREW | M3×6 |
| S25 | YRS3004M | SCREW | M3×4 |
| S26 | SC43390-003 | SCREW | FOR HANDLE BASE |
| S27 | SDSP2606M | SCREW | M2.6 x 6 |
| S28 | SPSK2060M | | M2 x 6 |

## 5.2 TRIPOD BASE ASSEMBLY

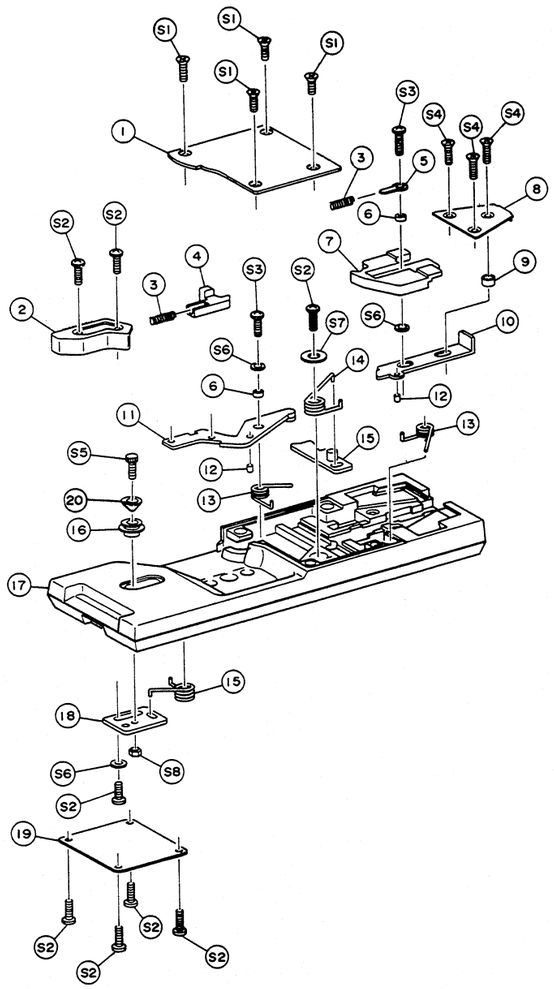

**• Tripod base assembly parts list** M2

M2MM□□□□

| Symbol No. | Part No. | Part Name | Description |
|---|---|---|---|
| 1 | SC31560-001 | TOP COVER | |
| 2 | SC31559-001 | KNOB | |
| 3 | SC45226-001 | SPRING | |
| 4 | SC45228-001 | LOCK KNOB | |
| 5 | SC45225-001 | RAG | |
| 6 | SC45224-001 | COLOR | |
| 7 | SC31557-001 | LOCK BASE | |
| 8 | SC45227-001 | FRONT PLATE | |
| 9 | SC45222-001 | SPACER | |
| 10 | SC45221-001 | PLATE | |
| 11 | SC31558-001 | RELEASE LEVER | |
| 12 | PSE2005 | SPRING PIN | |
| 13 | SC45220-001 | SPRING | |
| 14 | SC45217-001 | ARM SPRING | |
| 15 | SC31556-001 | PLATE | |
| 16 | SC45216-001 | GUIDE PIN | |
| 17 | SC20494-001 | FRAME | |
| 18 | SC45218-001 | GUIDE PLATE | |
| 19 | SC45219-001 | BOTTOM PLATE | |
| 20 | SC45278-001 | GUIDE CAP | |
| S1 | SSST4008 | TAPPING SCREW | M4×8 |
| S2 | SDST3006M | TAPPING SCREW | M3×6 |
| S3 | SDST3010M | TAPPING SCREW | M3×10 |
| S4 | SSST3008M | TAPPING SCREW | M3×8 |
| S5 | BYS3020M | SCREW | M3 x 20 |
| S6 | Q03091-138 | WASHER | |
| S7 | SC45223-001 | WASHER | |
| S8 | NNS3000N | NUT | |

**Note: Sales model KA-510 Tripod base may have attachment accessories for camera base.**



# SECTION 6
# CHARTS AND DIAGRAMS

## ■ SCHEMATIC DIAGRAM NOTES

**● Schematic safety precaution**

⚠ Parts are safety related parts.
When replacing them, be sure to use the specified parts.

Voltage and waveform measurements.
Voltage: Measured with digital voltmeter in DC range; iris closed.
Waveform: Grey scale illuminated at more than 4000 lux at 3200 K lighting.

● Terminal logic
Top bar of terminal name show input or output logic.
Top bar shows, the control circuit become active at negative (low) logic input for example.

● Digital transistors

DTC124EU

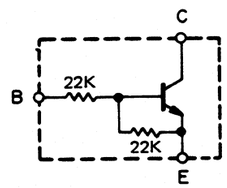


DTA124EU

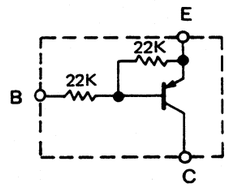


● Unless otherwise specified transistors and F.E.T.s are:

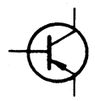
2SA1532

2SC3930

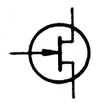
2SK662

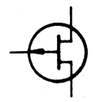
2SJ84

● Definistion of the (A) and the (B) or circuit boards diagrams
(A) : Side on which discrete parts are assembled
(B) : Side on which only chip parts are assembled.

## ■ REPLACING SUBMINIATURE "CHIP" PARTS

- Some resistors, shorting jumpers (0 Ω resistance), ceramic capacitors, transistors, and diodes are chip parts. These chip parts cannot be reused after they are once removed.
- Chip resistors used in some circuits are of high precision type having little error in resistance.
  To demonstrate the full capacity of this camera head, place an order for proper parts referring to the diagrams and parts lists in the sections 7.
- Soldering cautions:
  1) Do not apply heat for more than 3 seconds.
  2) Avoid using a rubbing stroke when soldering.
  3) Discard removed chips; do not reuse them.
  4) Supplementary cementing is not required.
  5) Use care not to scratch or otherwise damage the chips.
- Resistors and capacitors are not interchangeable with chip parts which are used in the color video cameras BY-110, KY-210, etc., because of difference in size. In case of order for parts, refer to the section 7 "ELECTRICAL PARTS LIST".
- Polarities of chip electrolytic capacitors and chip tanntalum capacitors used in KA-35 are as illustrated below. Polarities indicated by silk-screen printing on P.C. boards are also shown below. When replacing such parts, make sure of polarities.

• Electrolytic capacitor • Non-polarized electrolytic capacitor • Tantalum capacitor

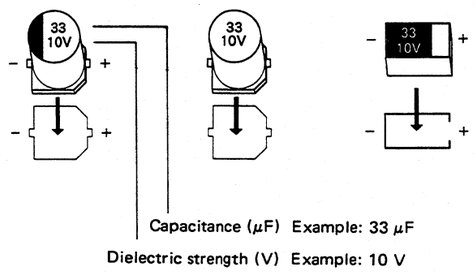

## 6.1 DR1 CIRCUIT BOARD

**• ADDRESS TABLE OF BOARD PARTS**

Each address may have an address error by one interval.

A-1C
Side — Y axis
X axis

| | | | | | |
|---|---|---|---|---|---|
| IC1 | B- 3B | R35 | A- 3A | CN22 | A- 1C |
| IC2 | B- 2B | R36 | B- 4B | CN41 | A- 1C |
| IC3 | B- 2C | R39 | A- 3C | | |
| IC4 | B- 2A | R40 | B- 3C | LC1 | A- 3C |
| IC5 | B- 2B | R41 | B- 1C | | |
| IC6 | A- 3A | R42 | B- 1C | | |
| IC7 | B- 3C | R43 | B- 1C | | |
| IC8 | B- 3A | | | | |
| IC9 | B- 1B | VR1 | A- 4A | | |
| | | VR2 | A- 4A | | |
| Q1 | B- 4A | VR3 | A- 3A | | |
| Q2 | B- 4A | VR5 | A- 3A | | |
| Q3 | B- 3A | VR6 | A- 2A | | |
| Q4 | B- 4B | VR7 | A- 1A | | |
| D1 | B- 4A | C1 | B- 4B | | |
| D2 | B- 4A | C2 | B- 4B | | |
| D3 | B- 3A | C3 | A- 4B | | |
| D4 | B- 4A | C4 | B- 4A | | |
| D5 | A- 3B | C5 | B- 4A | | |
| D6 | B- 2B | C6 | B- 3A | | |
| D8 | A- 2B | C7 | B- 4A | | |
| D9 | B- 1C | C8 | B- 4A | | |
| D11 | B- 1C | C9 | B- 4B | | |
| D12 | B- 1C | C10 | A- 4A | | |
| D14 | B- 2A | C11 | A- 3C | | |
| | | C12 | A- 3C | | |
| R1 | B- 4C | C13 | A- 3C | | |
| R2 | B- 4C | C14 | B- 3B | | |
| R3 | B- 4C | C15 | B- 3B | | |
| R4 | B- 4C | C16 | A- 2B | | |
| R5 | B- 4A | C17 | A- 3B | | |
| R6 | B- 4A | C18 | B- 2B | | |
| R7 | B- 4A | C19 | B- 2C | | |
| R8 | B- 3A | C20 | A- 2B | | |
| R9 | B- 3A | C21 | A- 2C | | |
| R10 | B- 3A | C22 | B- 4B | | |
| R11 | B- 4A | C23 | B- 2C | | |
| R12 | B- 4A | C24 | B- 1C | | |
| R13 | A- 3C | C25 | A- 2C | | |
| R15 | B- 3B | C26 | A- 2C | | |
| R16 | B- 2B | C27 | B- 2A | | |
| R17 | A- 3B | C28 | A- 2A | | |
| R19 | B- 2B | C29 | A- 2A | | |
| R20 | B- 2C | C30 | B- 2A | | |
| R21 | B- 2C | C31 | B- 2A | | |
| R22 | B- 2B | C32 | B- 2A | | |
| R23 | B- 2C | C33 | A- 2B | | |
| R24 | A- 1C | C34 | A- 3A | | |
| R25 | B- 2D | C35 | A- 2B | | |
| R26 | B- 4C | C36 | B- 3C | | |
| R27 | B- 2A | C37 | A- 3A | | |
| R28 | A- 2B | C38 | A- 3B | | |
| R29 | B- 1B | C39 | B- 2B | | |
| R30 | B- 1D | C40 | B- 1C | | |
| R31 | A- 2B | | | | |
| R32 | A- 4B | CN9 | A- 2D | | |
| R33 | A- 3B | CN10 | A- 4B | | |
| R34 | A- 3A | CN19 | A- 4C | | |

**— Side (A) —**

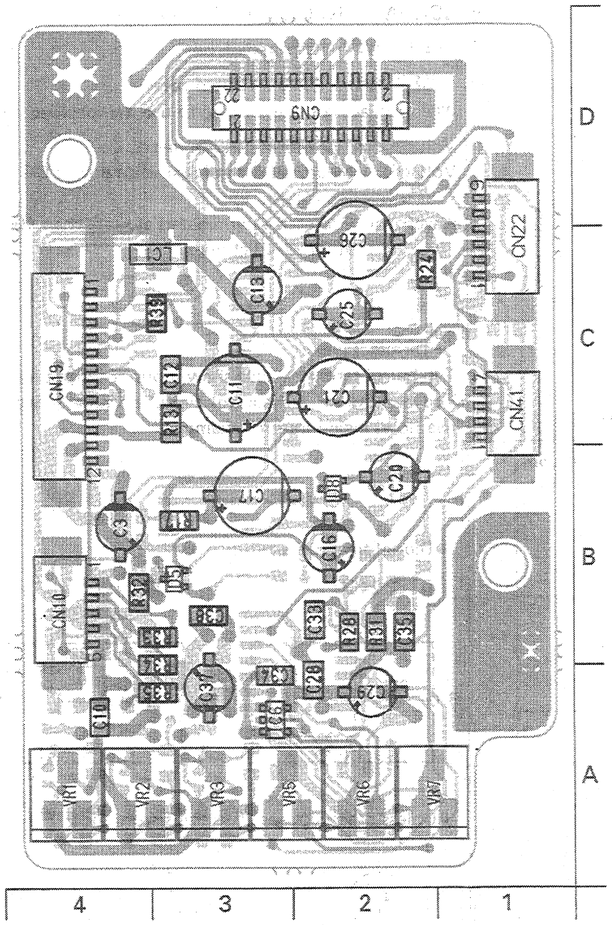


**— Side (B) —**

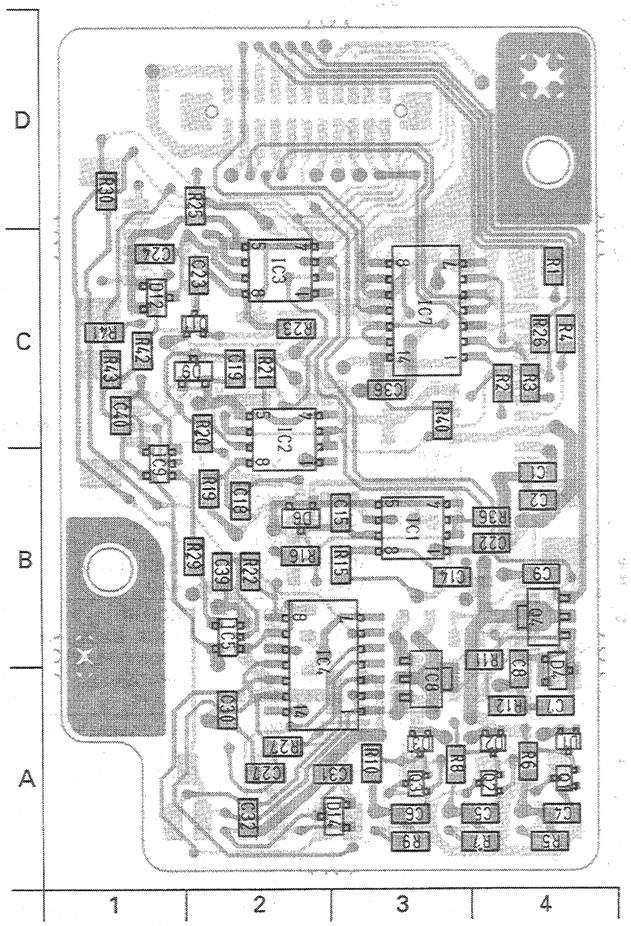


**Chip parts pin arrangement (Top view)**

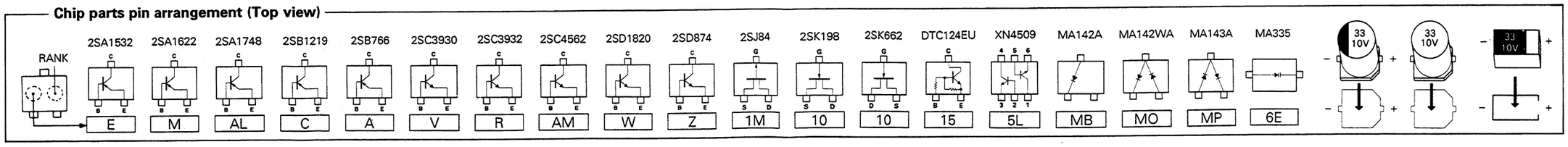

## 6.2 DR1 SCHEMATIC DIAGRAM 05
**(CCD Driver No.1 circuit)**

**Main function of DR1 board:**
- Generation of Vsub voltage
- Generation of Vsub voltage for shutter
- Phase shift of Sample & Hold pulse and Reset pulse

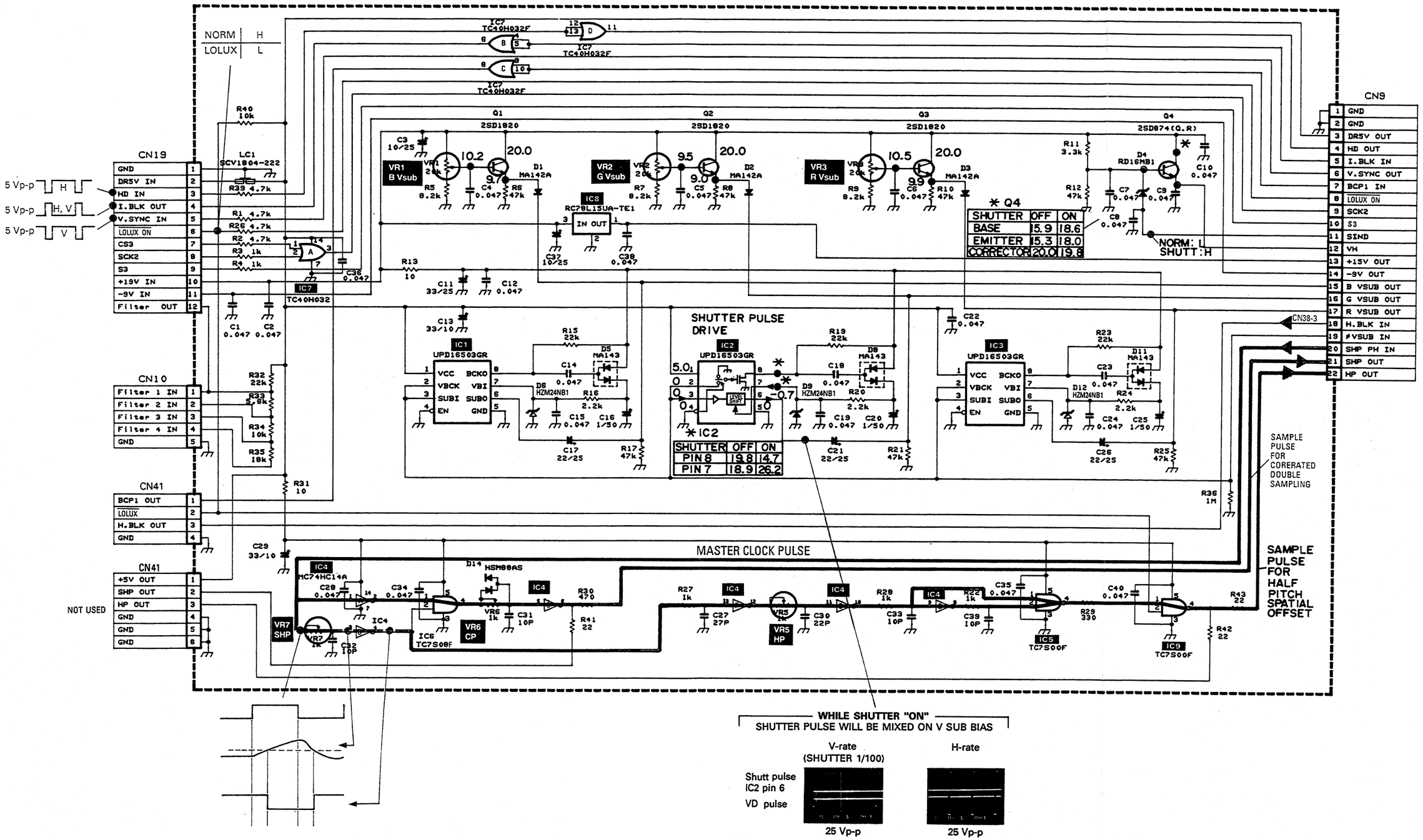

## 6.3 DR2 CIRCUIT BOARD

**• ADDRESS TABLE OF BOARD PARTS**

Each address may have an address error by one interval.

A-1C
Side — Y axis
X axis

| | | | | | |
|---|---|---|---|---|---|
| IC2 | B- 1A | R39 | B- 1F | C45 | B- 2A |
| IC3 | A- 1D | R40 | B- 1F | C46 | B- 2A |
| IC4 | B- 1D | R41 | B- 1E | C47 | B- 1D |
| IC5 | A- 1B | R42 | A- 1A | C48 | B- 1D |
| IC6 | B- 1B | R43 | A- 1A | C50 | B- 2A |
| IC7 | B- 2E | R44 | B- 1C | C51 | B- 2A |
| IC8 | B- 2C | R45 | B- 1D | C52 | B- 2C |
| IC9 | B- 2A | R46 | B- 2D | | |
| IC11 | B- 1D | R47 | B- 2E | L1 | B- 1A |
| IC12 | B- 1D | R48 | B- 1C | L2 | B- 2B |
| | | R49 | B- 1B | | |
| Q1 | A- 2B | R50 | B- 1D | TP1 | A- 1A |
| Q2 | B- 1E | R51 | B- 2A | | |
| Q3 | B- 1C | R52 | B- 2A | CN6 | A- 2E |
| Q4 | B- 2A | | | CN7 | A- 2C |
| | | VR1 | A- 1B | CN8 | A- 2B |
| D1 | B- 1A | | | CN9 | A- 1F |
| D2 | A- 2E | C1 | A- 1F | CN33 | A- 1A |
| D3 | B- 1B | C2 | B- 1B | | |
| D4 | A- 1A | C4 | A- 2F | X1 | A- 2A |
| D5 | B- 2C | C5 | B- 2C | | |
| | | C6 | A- 2D | | |
| R2 | B- 2F | C7 | A- 2C | | |
| R3 | B- 2C | C8 | B- 1C | | |
| R4 | B- 1D | C9 | B- 1C | | |
| R5 | B- 1D | C10 | B- 1E | | |
| R6 | B- 1D | C11 | B- 1A | | |
| R7 | B- 1D | C12 | B- 1A | | |
| R8 | B- 1D | C13 | B- 1A | | |
| R9 | B- 1D | C14 | B- 1B | | |
| R10 | B- 1D | C15 | B- 1B | | |
| R11 | B- 1C | C16 | B- 1A | | |
| R12 | B- 1C | C17 | B- 1A | | |
| R13 | B- 1C | C19 | B- 2A | | |
| R14 | B- 1C | C20 | A- 1A | | |
| R15 | B- 1C | C21 | B- 2B | | |
| R16 | B- 1C | C22 | B- 2C | | |
| R17 | B- 1C | C23 | B- 1C | | |
| R18 | B- 2C | C24 | B- 1B | | |
| R19 | B- 2C | C25 | B- 1C | | |
| R20 | B- 1A | C26 | A- 1B | | |
| R21 | B- 2A | C27 | B- 2B | | |
| R22 | B- 1A | C28 | A- 2B | | |
| R23 | B- 1B | C29 | A- 2A | | |
| R24 | B- 1A | C30 | B- 2E | | |
| R25 | B- 2B | C31 | A- 2E | | |
| R26 | B- 2B | C32 | B- 2E | | |
| R27 | B- 2B | C33 | B- 2D | | |
| R28 | B- 1B | C34 | A- 2E | | |
| R29 | B- 1B | C35 | B- 2C | | |
| R30 | B- 1B | C36 | A- 2D | | |
| R31 | B- 1C | C37 | B- 2C | | |
| R32 | B- 1C | C38 | B- 2C | | |
| R33 | B- 1B | C39 | A- 1E | | |
| R34 | B- 1B | C40 | A- 1F | | |
| R35 | B- 2B | C41 | A- 1E | | |
| R36 | B- 2B | C42 | A- 1E | | |
| R37 | B- 1A | C43 | B- 2A | | |
| R38 | B- 2A | C44 | A- 2B | | |

**— Side (A) —**

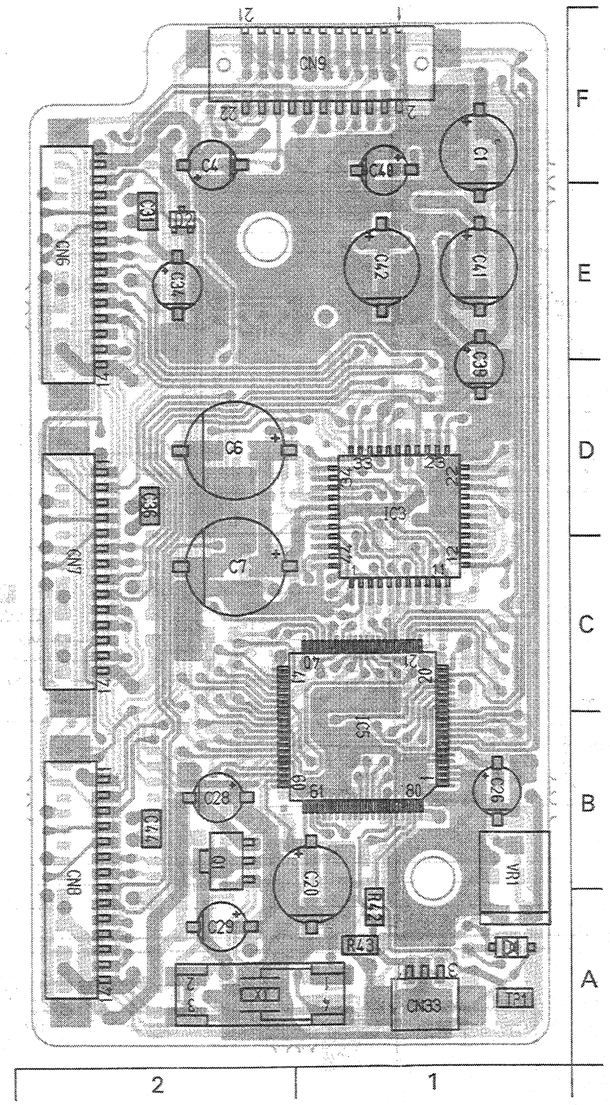


**— Side (B) —**

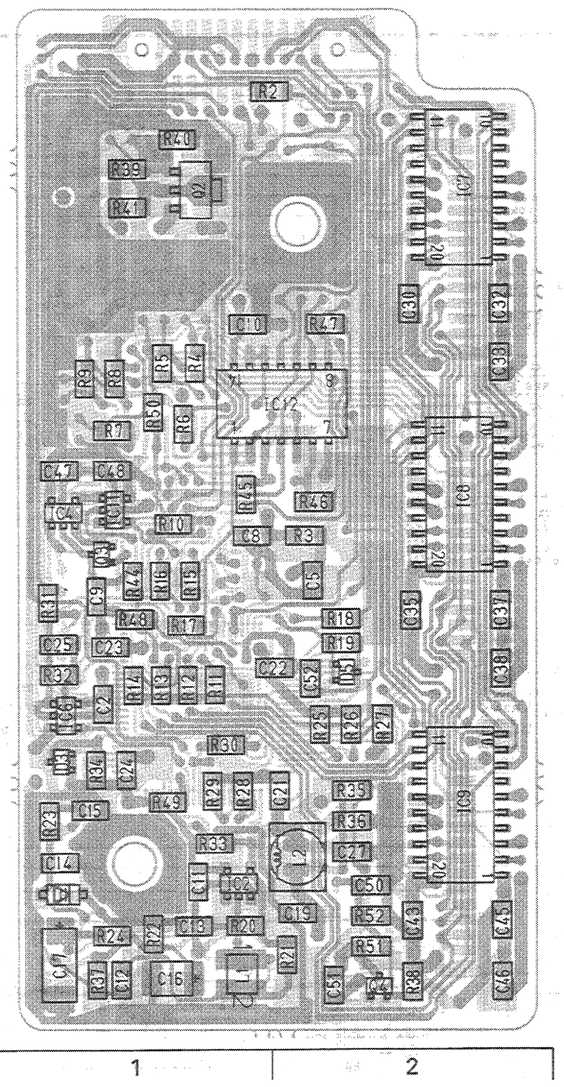


**Chip parts pin arrangement (Top view)**

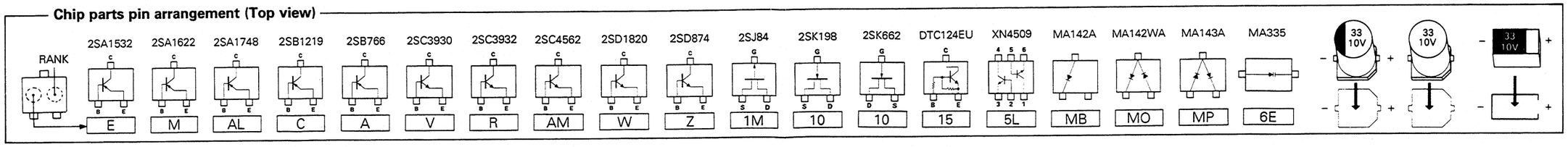

## 6.4 DR2 SCHEMATIC DIAGRAM 06
### (CCD Driver No.2 circuit)

| | R11 | R12 | R14 | R18 | R26 | R27 | R28 | R29 | R32 | C25 | C9 | R48 | R49 | R51 | R52 | R38 | Q4 |
|---|---|---|---|---|---|---|---|---|---|---|---|---|---|---|---|---|---|
| U version | OPEN | OPEN | OPEN | OPEN | OPEN | 0 | OPEN | OPEN | OPEN | OPEN | SHORT | OPEN | OPEN | OPEN | OPEN | 0 | OPEN |
| E version | OPEN | OPEN | OPEN | OPEN | 0 | OPEN | OPEN | OPEN | OPEN | OPEN | SHORT | OPEN | OPEN | 1.8K | 18K | 10K | 2SB1219 |

**Main function of DR2 board:**
- Generation of CCD drive pulse

UPPER: CN6-pin 8
CENTER: CN6-pin 7
BOTTOM: CN6-pin 10

13.5 Vp-p
5.7 Vp-p

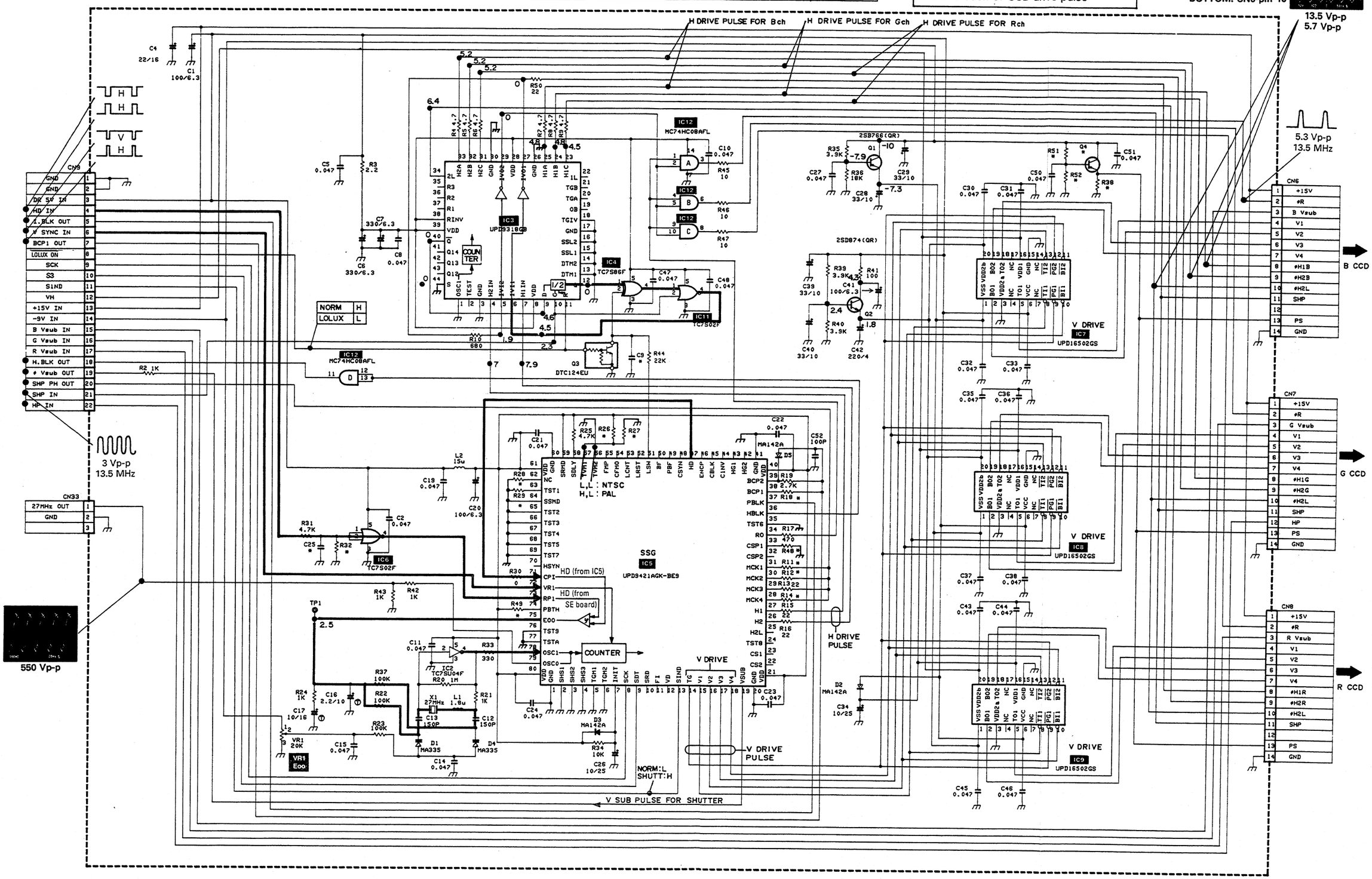

## 6.5 ISB/ISG/ISR CIRCUIT BOARDS

• ISB board

• ISG board

• ISR board

— Side (A) —

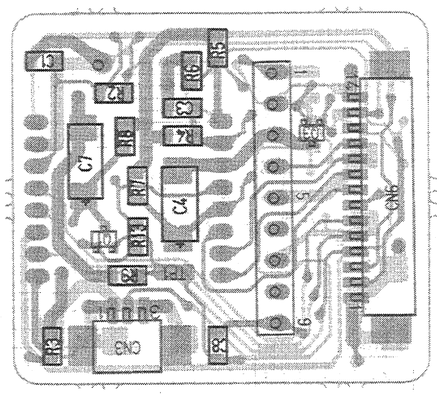


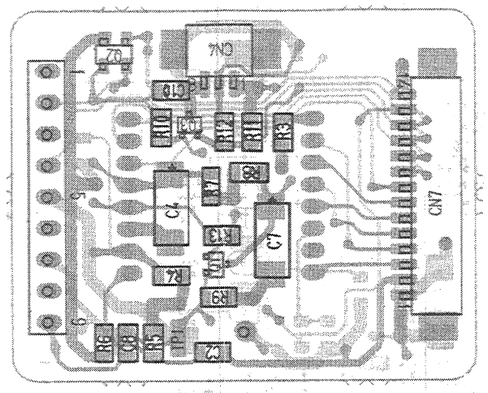


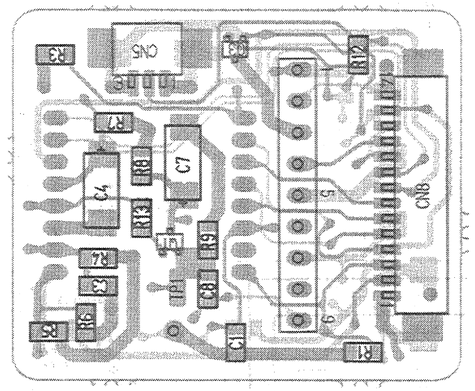


— Side (B) —

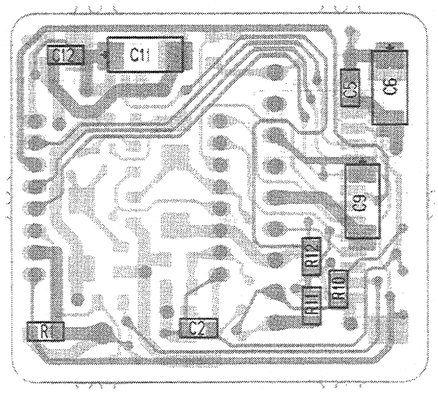


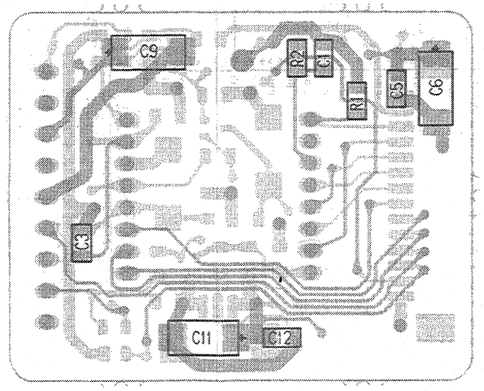


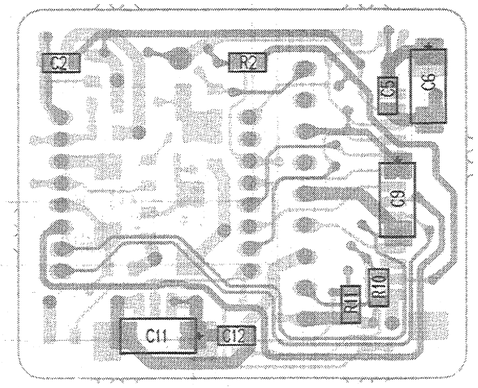

## 6.6 ISB/ISG/ISR SCHEMATIC DIAGRAMS 01/02/03
**(Image Sensor board)**

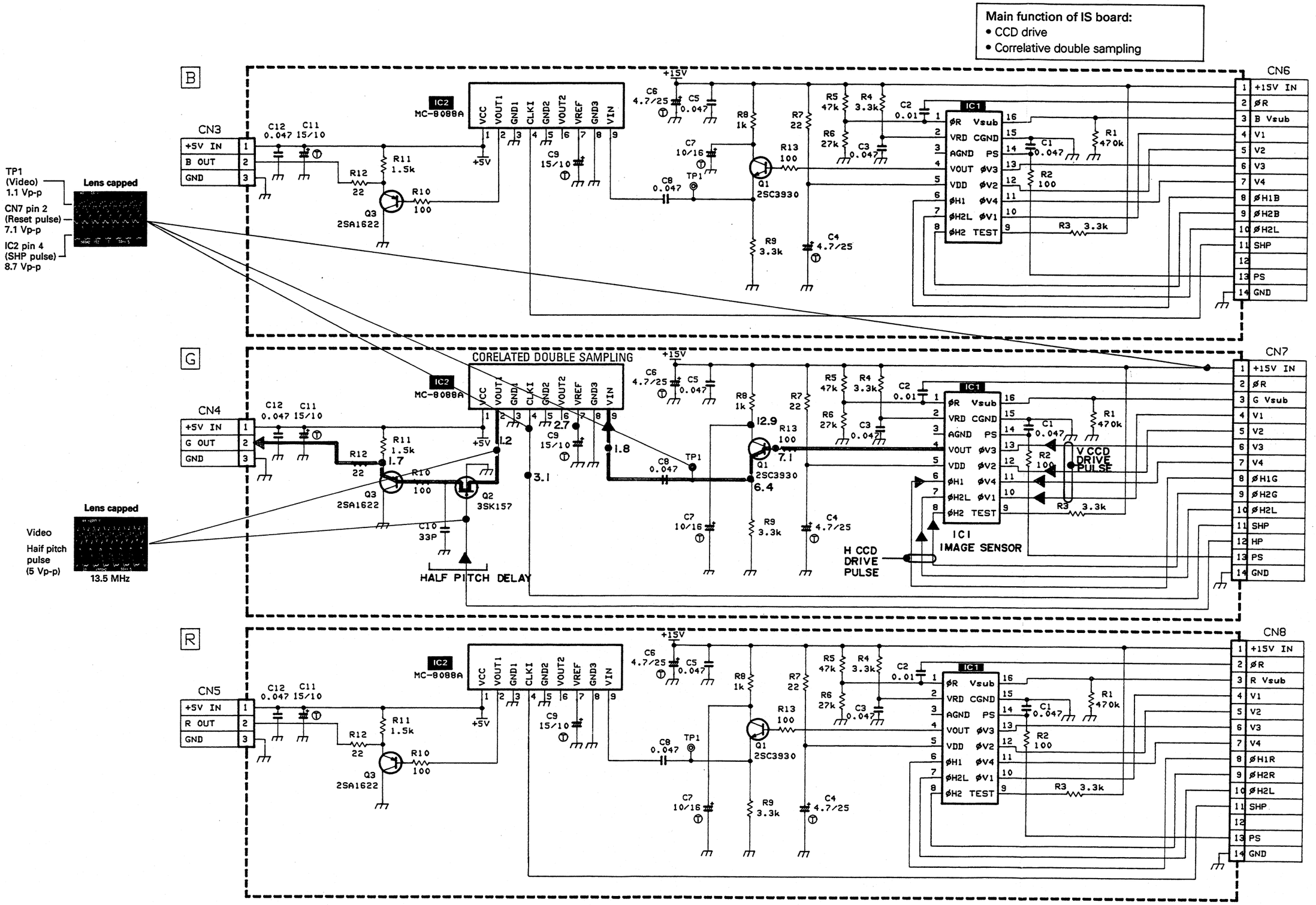

## 6.7 PA CIRCUIT BOARD

— Side (A) —

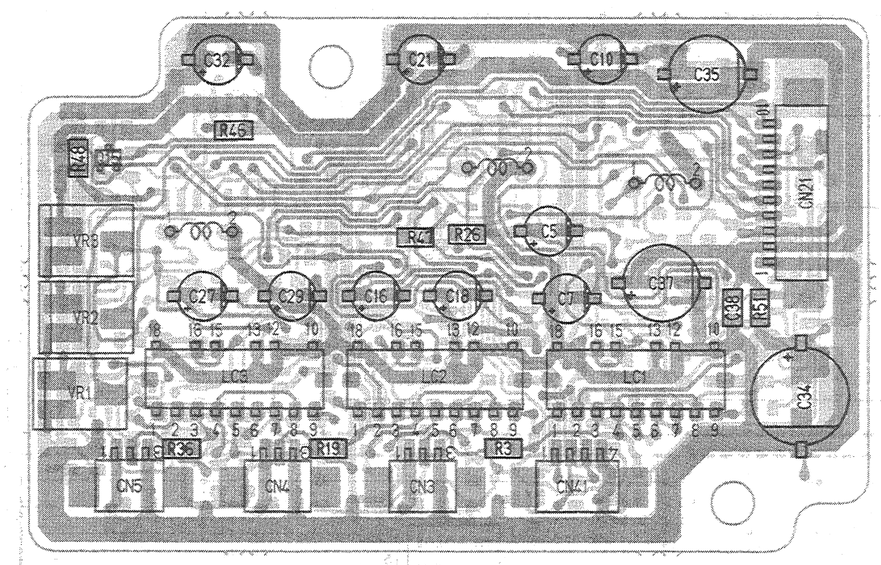


— Side (B) —

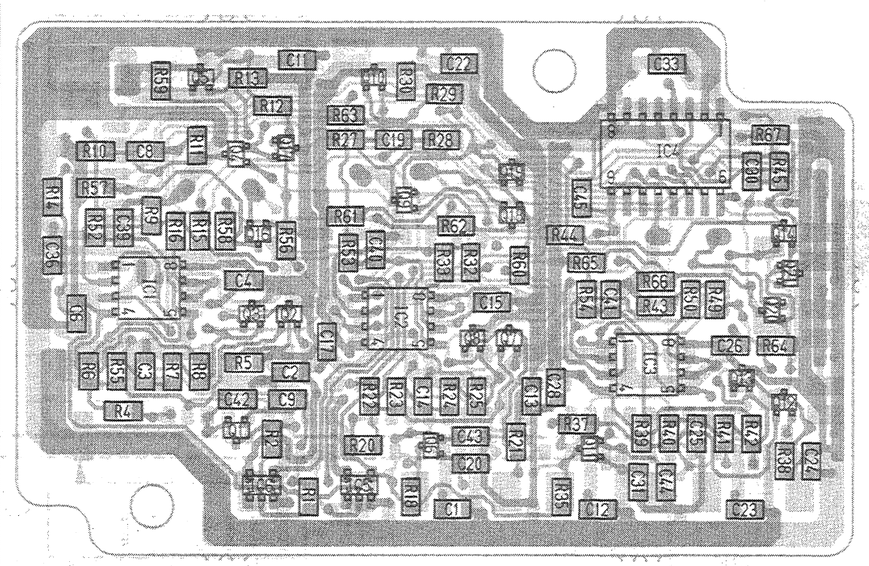


- **ADDRESS TABLE OF BOARD PARTS**

Each address may have an address error by one interval.

A-1C
Side — Y axis — X axis

| | | | | | | | | | | | | | |
|---|---|---|---|---|---|---|---|---|---|---|---|---|---|
| IC1 | B- 1C | Q19 | B- 3C | R23 | B- 2B | R50 | B- 4B | C3 | B- 1B | C28 | B- 3B | LC1 | A- 2B |
| IC2 | B- 2B | Q20 | B- 4B | R24 | B- 3B | R51 | A- 1B | C4 | B- 2C | C29 | A- 3B | LC2 | A- 3B |
| IC3 | B- 4B | Q21 | B- 4C | R25 | B- 3B | R52 | B- 1C | C5 | A- 2C | C30 | B- 4C | LC3 | A- 4B |
| IC4 | B- 4C | | | R26 | A- 2C | R53 | B- 2C | C6 | B- 1B | C31 | B- 4A | LC4 | A- 2C |
| IC5 | B- 2A | R1 | B- 2A | R27 | B- 2D | R54 | B- 3B | C7 | A- 2B | C32 | A- 4D | LC5 | A- 2C |
| IC6 | B- 2A | R2 | B- 2A | R28 | B- 3D | R55 | B- 1B | C8 | B- 1D | C33 | B- 4D | LC6 | A- 4C |
| | | R3 | A- 2A | R29 | B- 3D | R56 | B- 2C | C9 | B- 2B | C34 | A- 1B | | |
| Q1 | B- 2A | R4 | B- 1B | R30 | B- 2D | R57 | B- 1C | C10 | A- 2D | C35 | A- 1D | | |
| Q2 | B- 2B | R5 | B- 2B | R32 | B- 3C | R58 | B- 2C | C11 | B- 2D | C36 | B- 1C | | |
| Q3 | B- 2B | R6 | B- 1B | R33 | B- 3C | R59 | B- 1D | C12 | B- 3A | C37 | A- 2C | | |
| Q4 | B- 2C | R7 | B- 1B | R35 | B- 3A | R60 | B- 3C | C13 | B- 3B | C38 | A- 1B | | |
| Q5 | B- 1D | R8 | B- 1B | R36 | A- 4A | R61 | B- 2C | C14 | B- 2B | C39 | B- 1C | | |
| Q6 | B- 3A | R9 | B- 1C | R37 | B- 3A | R62 | B- 3C | C15 | B- 3B | C40 | B- 2C | | |
| Q7 | B- 3B | R10 | B- 1D | R38 | B- 4A | R63 | B- 2D | C16 | A- 3B | C41 | B- 3B | | |
| Q8 | B- 3B | R11 | B- 1D | R39 | B- 4A | R64 | B- 4B | C17 | B- 2B | C42 | B- 2B | | |
| Q9 | B- 2C | R12 | B- 2D | R40 | B- 4A | R65 | B- 3C | C18 | A- 2B | C43 | B- 3A | | |
| Q10 | B- 2D | R13 | B- 2D | R41 | B- 4A | R66 | B- 4C | C19 | B- 2D | C44 | B- 4A | | |
| Q11 | B- 3A | R14 | B- 1C | R42 | B- 4A | R67 | B- 4D | C20 | B- 3A | C45 | B- 3C | | |
| Q12 | B- 4B | R15 | B- 1C | R43 | B- 4B | | | C21 | A- 3D | | | | |
| Q13 | B- 4B | R16 | B- 1C | R44 | B- 3C | VR1 | A- 4B | C22 | B- 3D | CN3 | A- 3A | | |
| Q14 | B- 4C | R18 | B- 2A | R45 | B- 4C | VR2 | A- 4B | C23 | B- 4A | CN4 | A- 3A | | |
| Q15 | A- 4C | R19 | A- 3A | R46 | A- 4D | VR3 | A- 4C | C24 | B- 4A | CN5 | A- 4A | | |
| Q16 | B- 2C | R20 | B- 2A | R47 | A- 3C | | | C25 | B- 4A | CN21 | A- 1C | | |
| Q17 | B- 2D | R21 | B- 3A | R48 | A- 4C | C1 | B- 3A | C26 | B- 4B | CN41 | A- 2A | | |
| Q18 | B- 3C | R22 | B- 2B | R49 | B- 4B | C2 | B- 2B | C27 | A- 4B | | | | |

**Chip parts pin arrangement (Top view)**

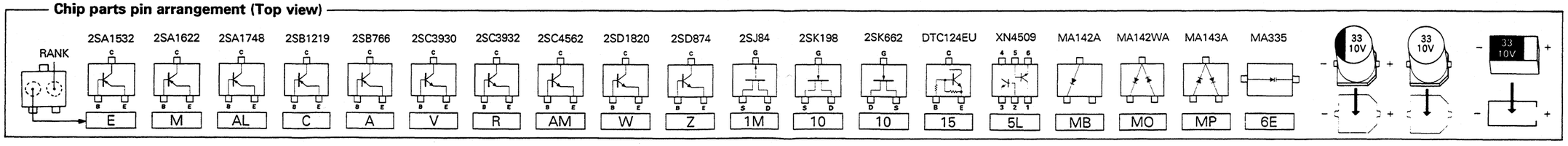

## 6.8 PA SCHEMATIC DIAGRAM 04
**(Pre Amplifier board)**

Main function of PA board:
- Preamp.
- Black balance adjustment

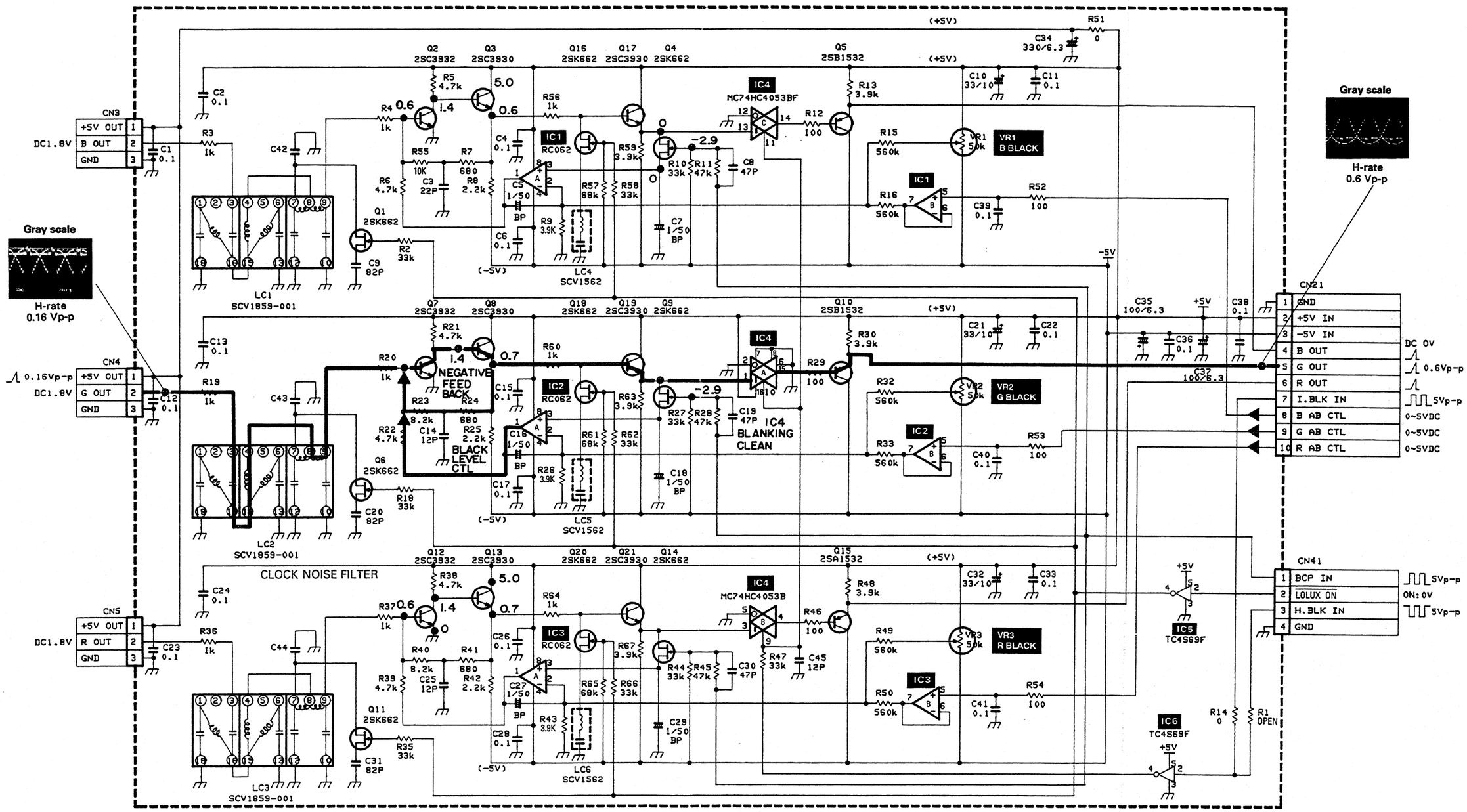

## 6.9 PR1 CIRCUIT BOARD

**• ADDRESS TABLE OF BOARD PARTS**

Each address may have an address error by one interval.

A-1C
Side — Y axis
X axis

| | | | |
|---|---|---|---|
| IC1 | B- 3C | D1 | A- 3C |
| IC2 | B- 3C | D2 | A- 2C |
| IC3 | B- 3D | D3 | A- 2C |
| IC4 | B- 4B | | |
| IC5 | B- 2C | VR1 | A- 1E |
| IC6 | B- 2C | VR2 | A- 1E |
| IC7 | B- 2D | VR3 | A- 1D |
| IC8 | B- 3B | VR4 | A- 1D |
| IC9 | B- 2C | VR5 | A- 1D |
| IC10 | B- 2C | VR6 | A- 1C |
| IC11 | B- 1D | VR7 | A- 1E |
| IC12 | B- 3B | VR8 | A- 1E |
| IC13 | B- 4F | VR9 | A- 1F |
| IC14 | B- 4F | VR10 | A- 1F |
| IC15 | B- 3F | VR11 | A- 1C |
| | | VR12 | A- 1C |
| Q2 | B- 3E | VR13 | A- 1C |
| Q3 | B- 3E | | |
| Q4 | B- 3E | VC1 | B- 2A |
| Q5 | B- 3E | VC2 | B- 1A |
| Q6 | B- 3C | VC3 | B- 1E |
| Q7 | B- 3E | VC4 | B- 1C |
| Q8 | B- 3D | | |
| Q9 | A- 3D | TP1 | B- 1F |
| Q11 | B- 2E | TP2 | B- 1F |
| Q12 | B- 2E | TP3 | B- 1E |
| Q13 | B- 2E | TP4 | B- 1A |
| Q14 | B- 2E | | |
| Q15 | B- 3C | | |
| Q16 | B- 3E | | |
| Q17 | B- 2D | | |
| Q18 | A- 2D | | |
| Q20 | B- 2E | | |
| Q21 | B- 2E | | |
| Q22 | B- 2E | | |
| Q23 | B- 2E | | |
| Q24 | B- 2C | | |
| Q25 | B- 2E | | |
| Q26 | B- 1E | | |
| Q27 | A- 2D | | |
| Q28 | B- 3F | | |
| Q29 | B- 2F | | |
| Q30 | B- 1F | | |
| Q31 | B- 2F | | |
| Q32 | B- 3F | | |
| Q33 | B- 2A | | |
| Q34 | B- 2B | | |
| Q35 | B- 1A | | |
| Q36 | B- 1B | | |
| Q37 | A- 3E | | |
| Q38 | A- 2E | | |
| Q39 | A- 2E | | |
| Q40 | A- 3E | | |
| Q41 | A- 2E | | |
| Q42 | A- 2E | | |
| Q43 | A- 3E | | |
| Q44 | A- 2E | | |
| Q45 | A- 2E | | |
| Q46 | A- 3C | | |

**— Side (A) —**

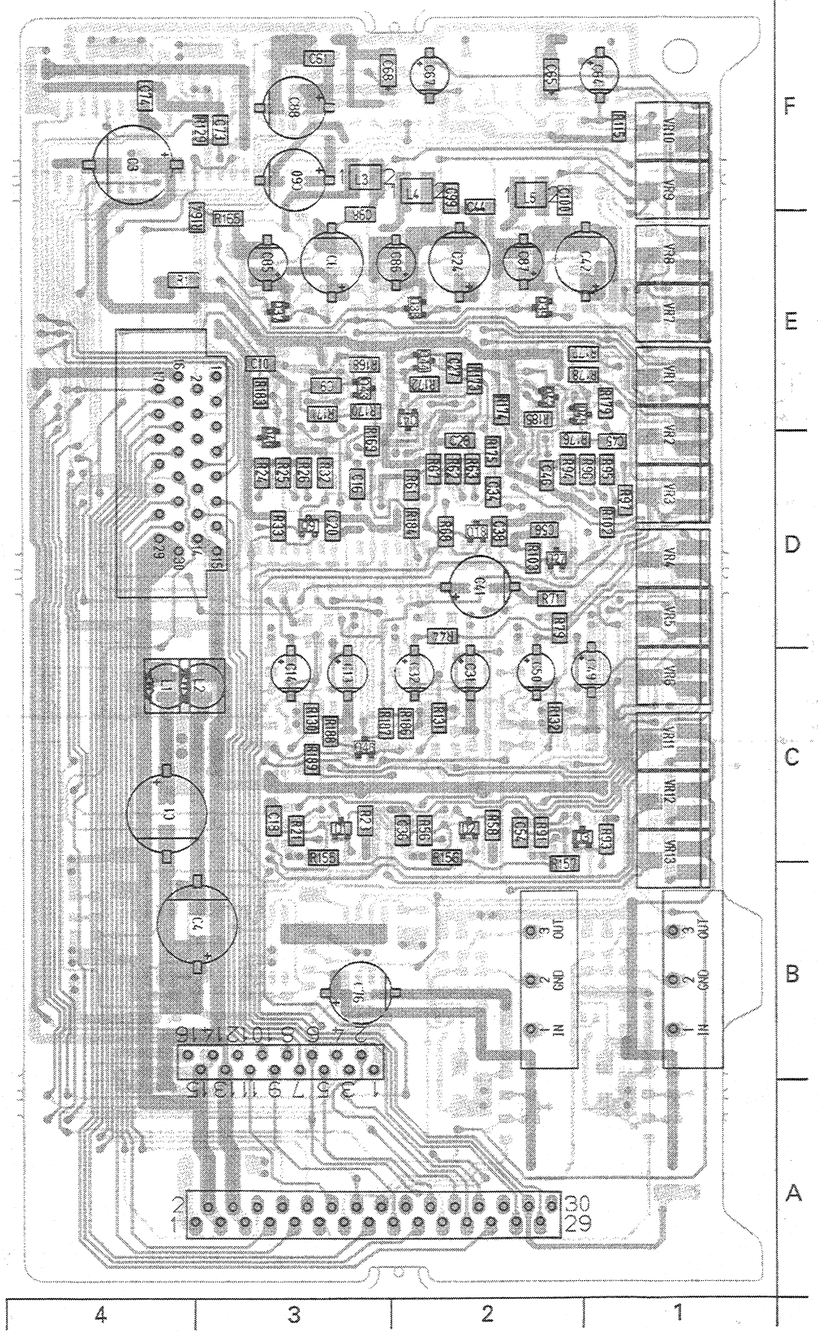


**— Side (B) —**

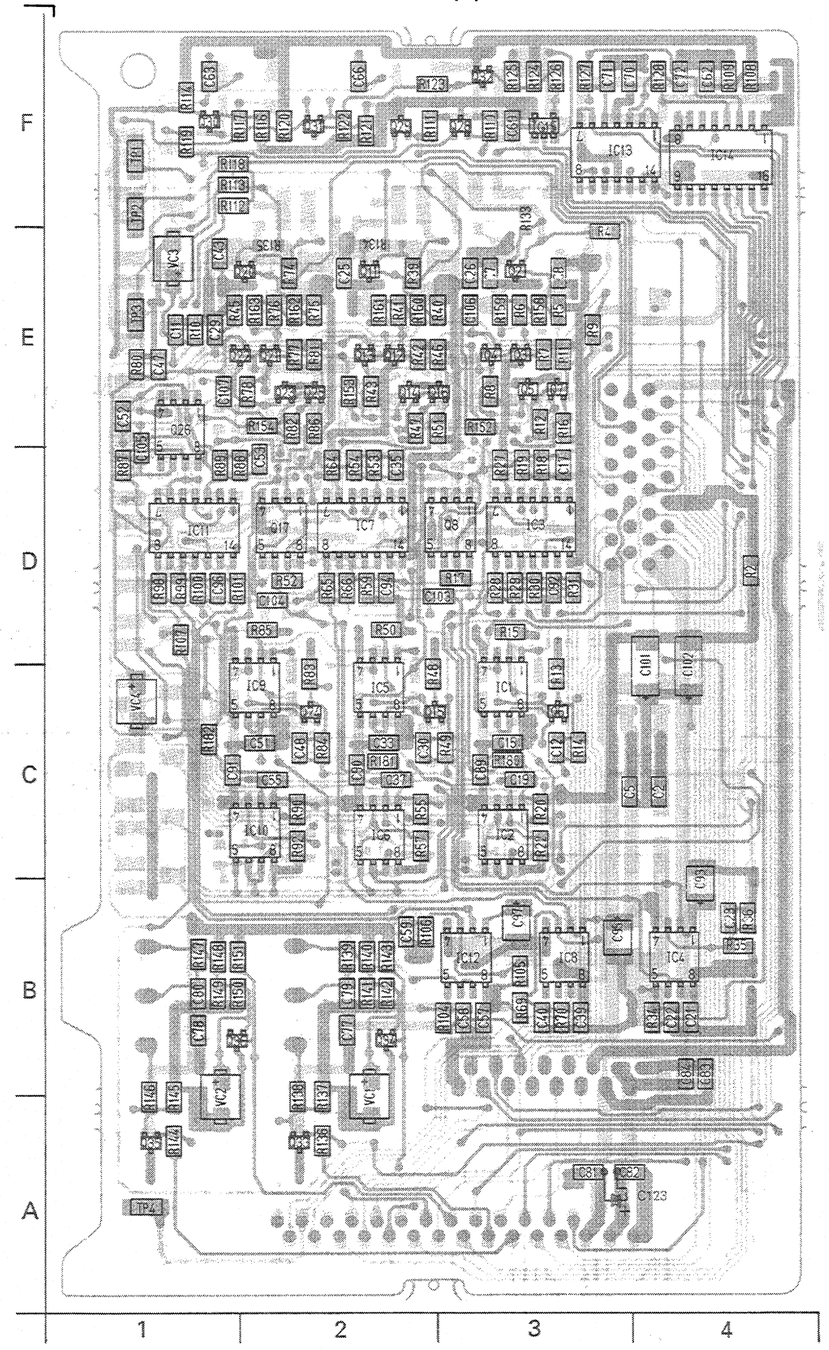


**Chip parts pin arrangement (Top view)**

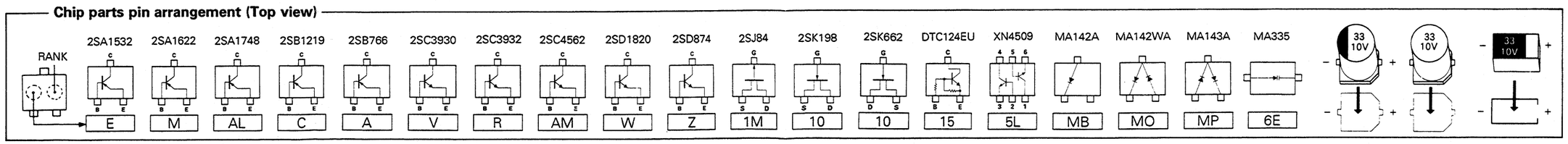

## 6.10 PR1 SCHEMATIC DIAGRAM 07
### (Video Process No.1 circuit)

Main function of PR1 board:
- In-gain setting
- High gain amp.
- White balance adjusting amp.
- Dynamic shading compensation

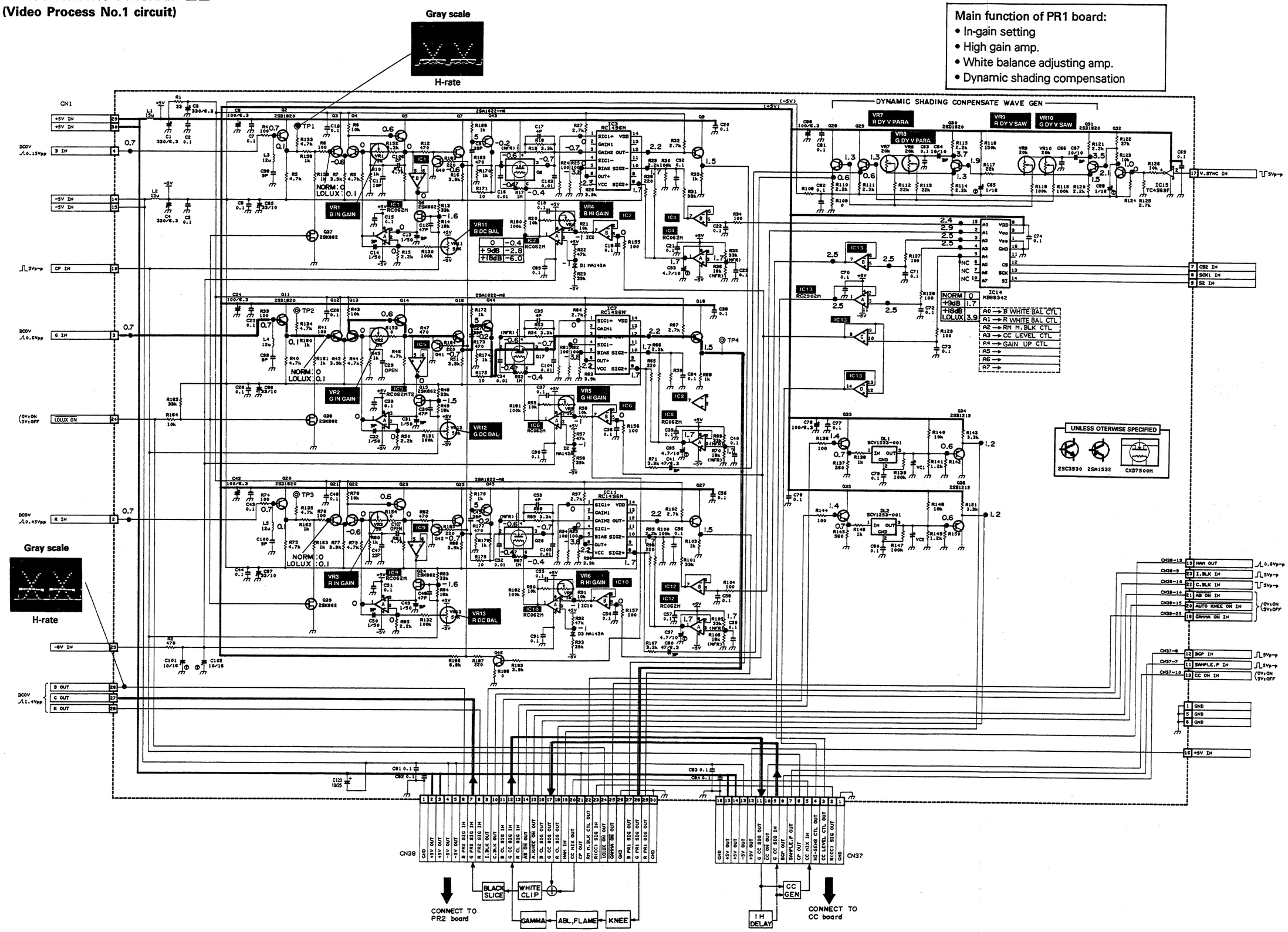

## 6.11 PR2 CIRCUIT BOARD

**• ADDRESS TABLE OF BOARD PARTS**

Each address may have an address error by one interval.

A-1C
Side — Y axis
X axis

| | | | |
|---|---|---|---|
| IC1 | A- 3E | VR14 | A- 1C |
| IC2 | A- 3D | VR15 | A- 1B |
| IC3 | A- 3B | VR16 | A- 1B |
| IC4 | A- 3E | VR17 | A- 1B |
| IC5 | A- 3D | VR18 | A- 1A |
| IC6 | A- 3B | VR19 | A- 3F |
| IC7 | A- 2B | VR20 | A- 4F |
| IC8 | A- 2E | VR21 | A- 4F |
| IC9 | A- 2D | | |
| IC10 | A- 2B | TP1 | B- 1E |
| IC11 | A- 2F | TP2 | B- 1D |
| IC12 | A- 2C | TP3 | B- 1C |
| IC13 | B- 1A | TP4 | B- 1E |
| IC14 | B- 2E | TP5 | B- 1D |
| | | TP6 | B- 1B |
| Q1 | B- 2E | TP7 | B- 1E |
| Q2 | B- 1F | TP8 | B- 1D |
| Q3 | B- 4E | TP9 | B- 1B |
| Q4 | B- 4E | | |
| Q5 | B- 2C | | |
| Q6 | A- 2A | | |
| Q7 | B- 4D | | |
| Q8 | B- 4C | | |
| Q9 | B- 2B | | |
| Q10 | B- 1F | | |
| Q11 | B- 4B | | |
| Q12 | B- 4B | | |
| Q13 | B- 3F | | |
| Q14 | B- 3F | | |
| Q15 | B- 3F | | |
| Q16 | B- 4F | | |
| Q17 | B- 4F | | |
| Q18 | B- 4F | | |
| Q19 | B- 3A | | |
| Q20 | B- 2A | | |
| Q21 | B- 2A | | |
| Q22 | B- 2A | | |
| Q23 | B- 2A | | |
| Q24 | B- 2A | | |
| Q25 | B- 2A | | |
| Q26 | B- 2B | | |
| Q27 | B- 2B | | |
| Q28 | B- 3A | | |
| Q29 | B- 2A | | |
| Q30 | B- 2F | | |
| Q31 | B- 1A | | |
| Q32 | B- 1A | | |
| Q33 | B- 4E | | |
| Q34 | B- 4D | | |
| Q35 | B- 4B | | |
| Q36 | A- 1E | | |
| Q37 | A- 1E | | |
| Q38 | A- 1E | | |
| D1 | B- 2F | | |
| VR1 | A- 1F | | |
| VR2 | A- 1F | | |
| VR3 | A- 1E | | |
| VR4 | A- 1E | | |
| VR5 | A- 1E | | |
| VR6 | A- 1E | | |
| VR7 | A- 1D | | |
| VR8 | A- 1D | | |
| VR9 | A- 1C | | |
| VR10 | A- 1D | | |
| VR11 | A- 1C | | |
| VR13 | A- 1C | | |

**— Side (A) —**

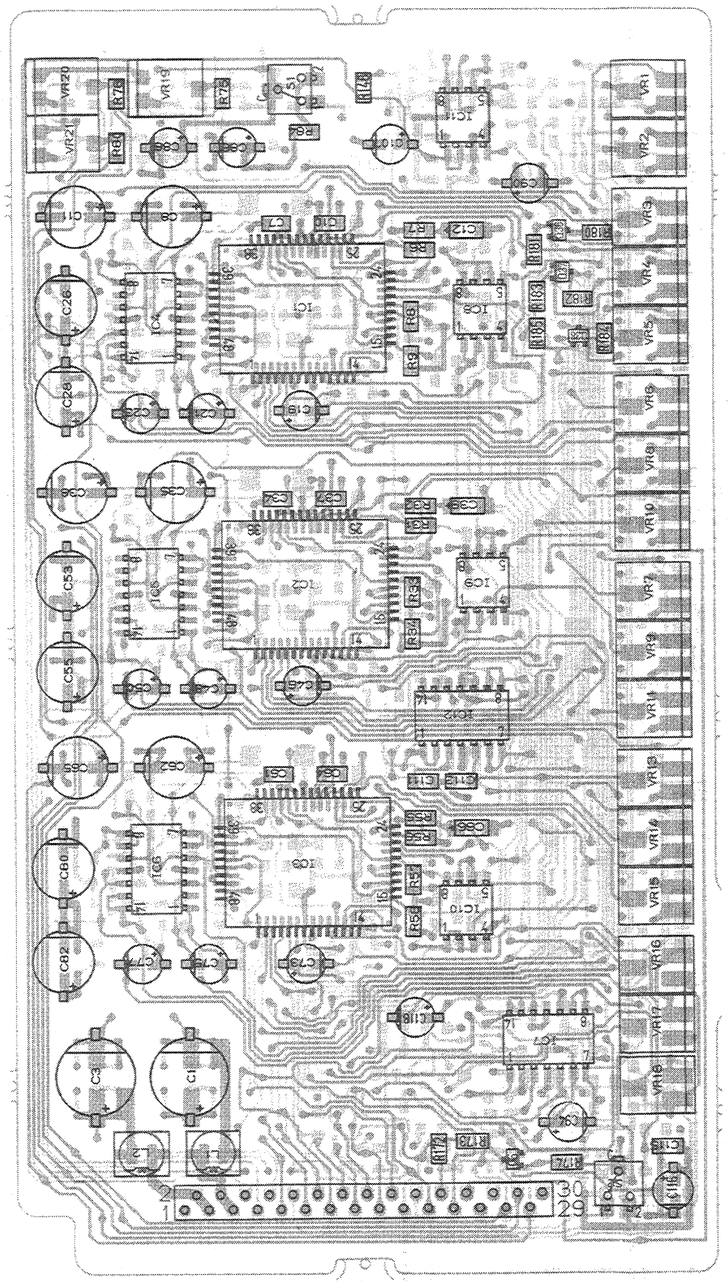

**— Side (B) —**

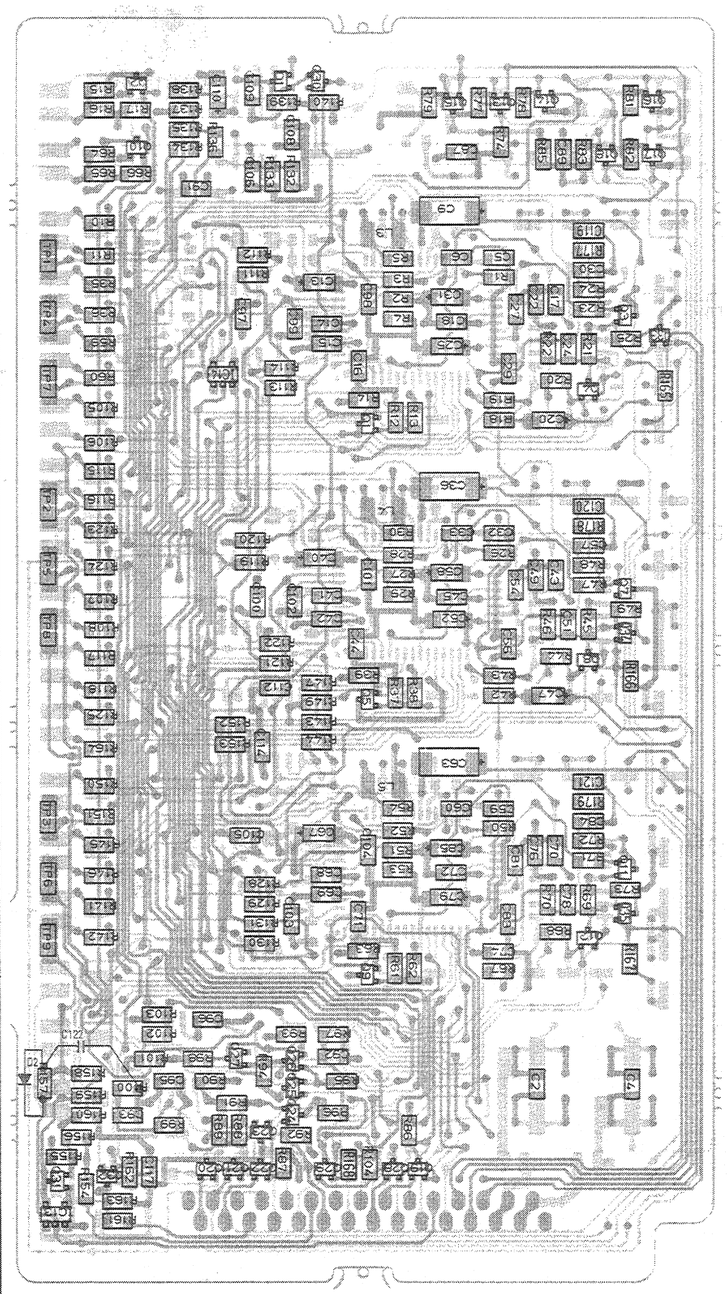

**Chip parts pin arrangement (Top view)**

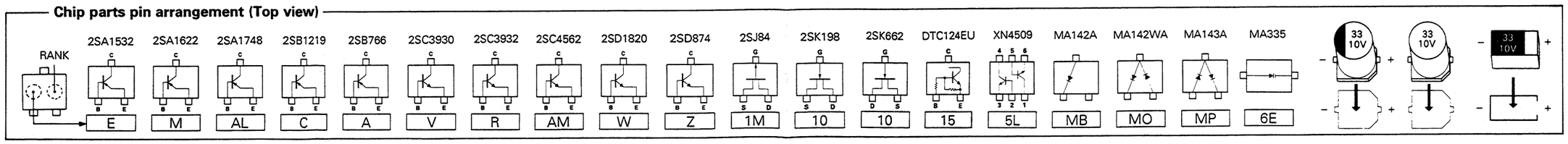

## 6.12 PR2 SCHEMATIC DIAGRAM 08
### (Video Process No.2 circuit)

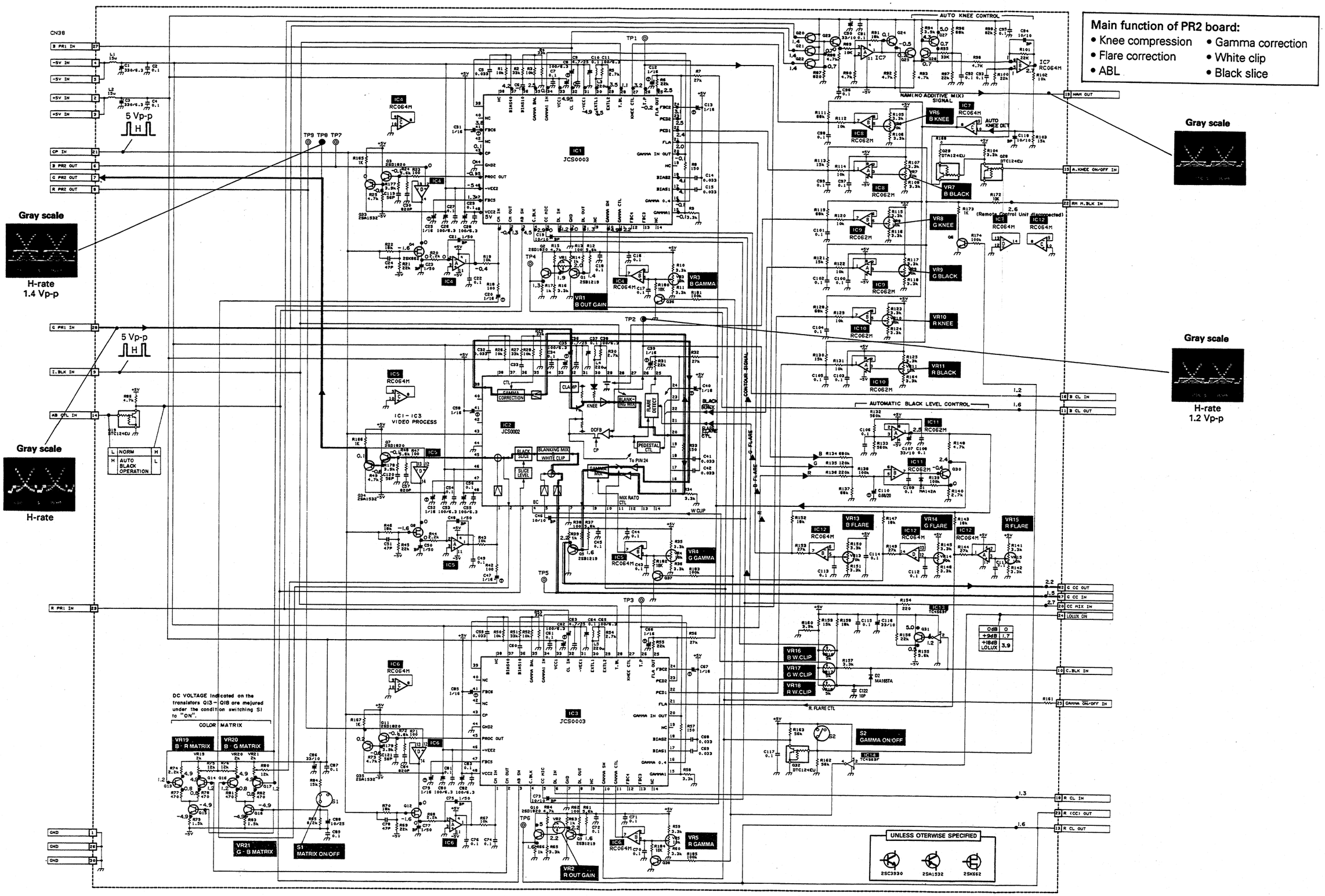

## 6.13 CC CIRCUIT BOARD

**• ADDRESS TABLE OF BOARD PARTS**

Each address may have an address error by one interval.

A-1C
Side — Y axis — X axis

| | | | |
|---|---|---|---|
| IC1 | A- 4B | VR4 | A- 1C |
| IC2 | B- 4E | VR5 | A- 1E |
| IC3 | A- 3C | VR6 | A- 1D |
| IC4 | B- 3E | VR7 | A- 1D |
| IC5 | B- 2E | | |
| IC6 | B- 2D | VC1 | B- 4B |
| IC9 | A- 1B | | |
| | | TP1 | B- 1F |
| Q1 | A- 2A | TP2 | B- 1F |
| Q2 | B- 4A | TP3 | B- 1E |
| Q3 | A- 4A | TP4 | B- 1C |
| Q4 | A- 4A | TP5 | B- 1C |
| Q5 | A- 4A | | |
| Q6 | B- 4A | | |
| Q7 | A- 4D | | |
| Q8 | A- 4D | | |
| Q9 | A- 4D | | |
| Q10 | A- 4D | | |
| Q11 | A- 4D | | |
| Q12 | B- 4E | | |
| Q13 | B- 4F | | |
| Q14 | B- 4F | | |
| Q15 | B- 3F | | |
| Q16 | B- 2F | | |
| Q17 | A- 3C | | |
| Q18 | A- 2C | | |
| Q19 | A- 3C | | |
| Q20 | A- 3C | | |
| Q21 | A- 3C | | |
| Q22 | A- 3C | | |
| Q23 | A- 3D | | |
| Q24 | A- 3D | | |
| Q25 | A- 3D | | |
| Q26 | A- 3D | | |
| Q27 | A- 3D | | |
| Q28 | B- 3E | | |
| Q29 | B- 2F | | |
| Q30 | B- 2F | | |
| Q31 | B- 1F | | |
| Q32 | B- 1F | | |
| Q33 | B- 1E | | |
| Q34 | B- 2D | | |
| Q35 | B- 2E | | |
| Q36 | B- 2E | | |
| Q37 | B- 1E | | |
| Q38 | B- 1E | | |
| Q39 | A- 2B | | |
| Q40 | A- 2B | | |
| Q41 | A- 2B | | |
| Q42 | A- 2C | | |
| Q43 | A- 2C | | |
| Q44 | B- 2D | | |
| Q45 | A- 2A | | |
| Q46 | B- 2C | | |
| Q47 | B- 1D | | |
| Q48 | A- 1D | | |
| Q49 | B- 1E | | |
| Q50 | B- 1D | | |
| Q51 | B- 1C | | |
| Q52 | A- 1B | | |
| Q53 | B- 1C | | |
| D1 | B- 2C | | |
| D2 | B- 3C | | |
| VR1 | A- 1A | | |
| VR2 | A- 1F | | |
| VR3 | A- 1E | | |

**— Side (A) —**

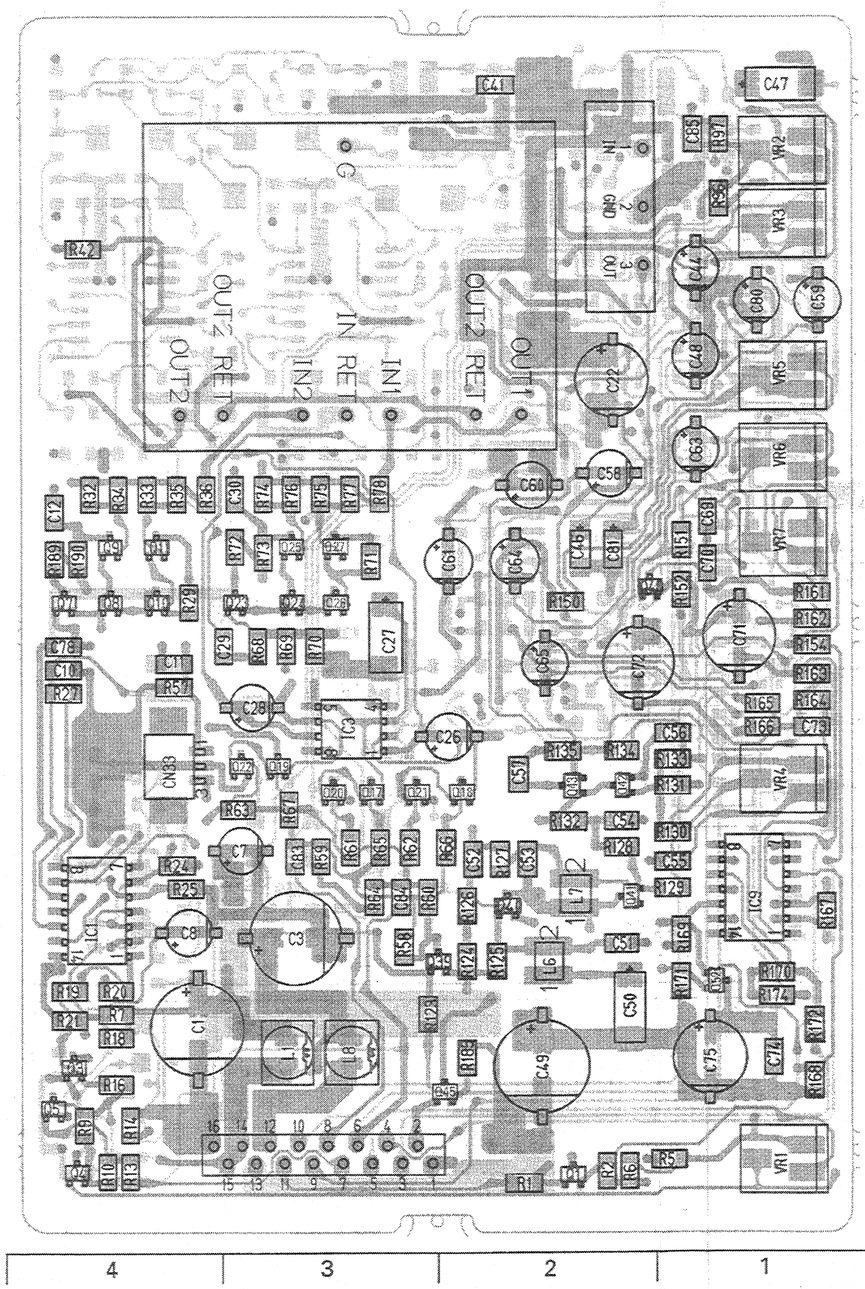


**— Side (B) —**

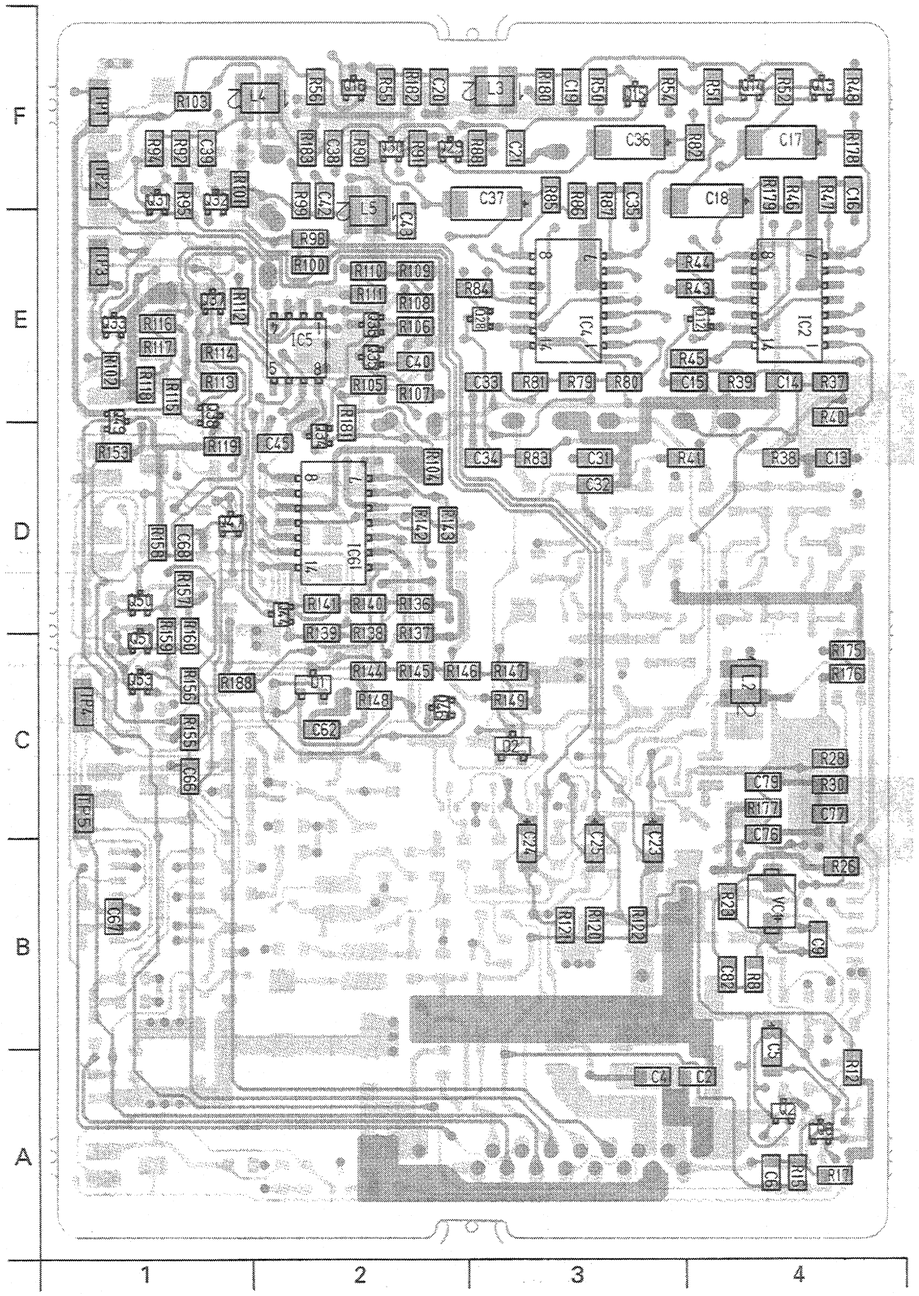


**Chip parts pin arrangement (Top view)**

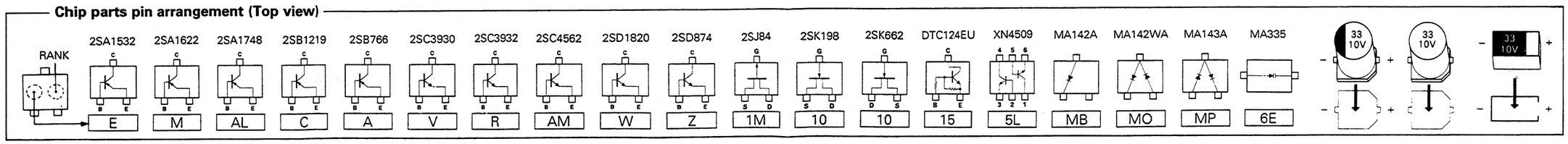


6-14 6-14

## 6.14 CC SCHEMATIC DIAGRAM 09
### (Contour Corrector)

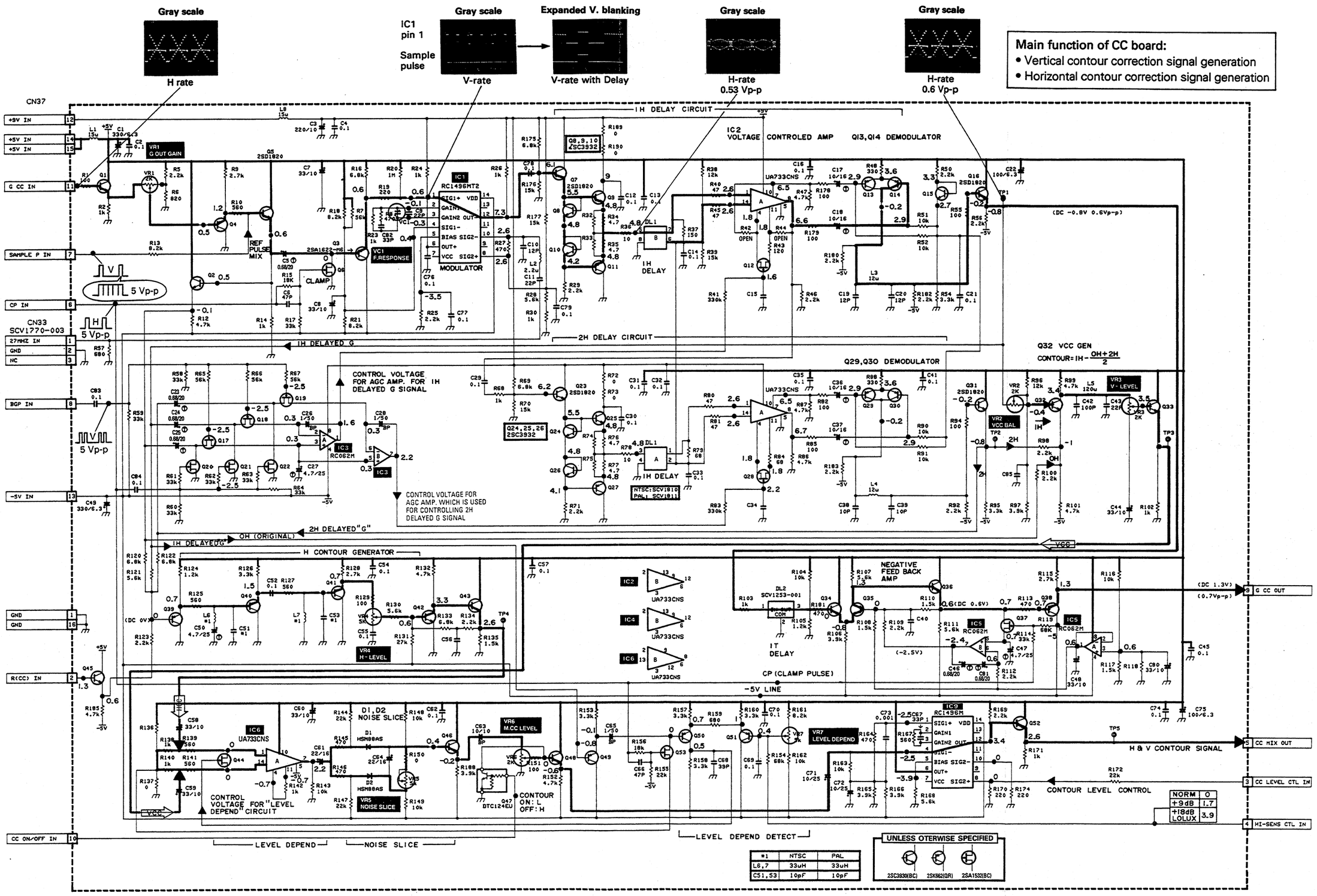


| *1 | NTSC | PAL |
|---|---|---|
| L6,7 | 33uH | 33uH |
| C51,53 | 10pF | 10pF |

## 6.15 SE CIRCUIT BOARD

— Side (A) —

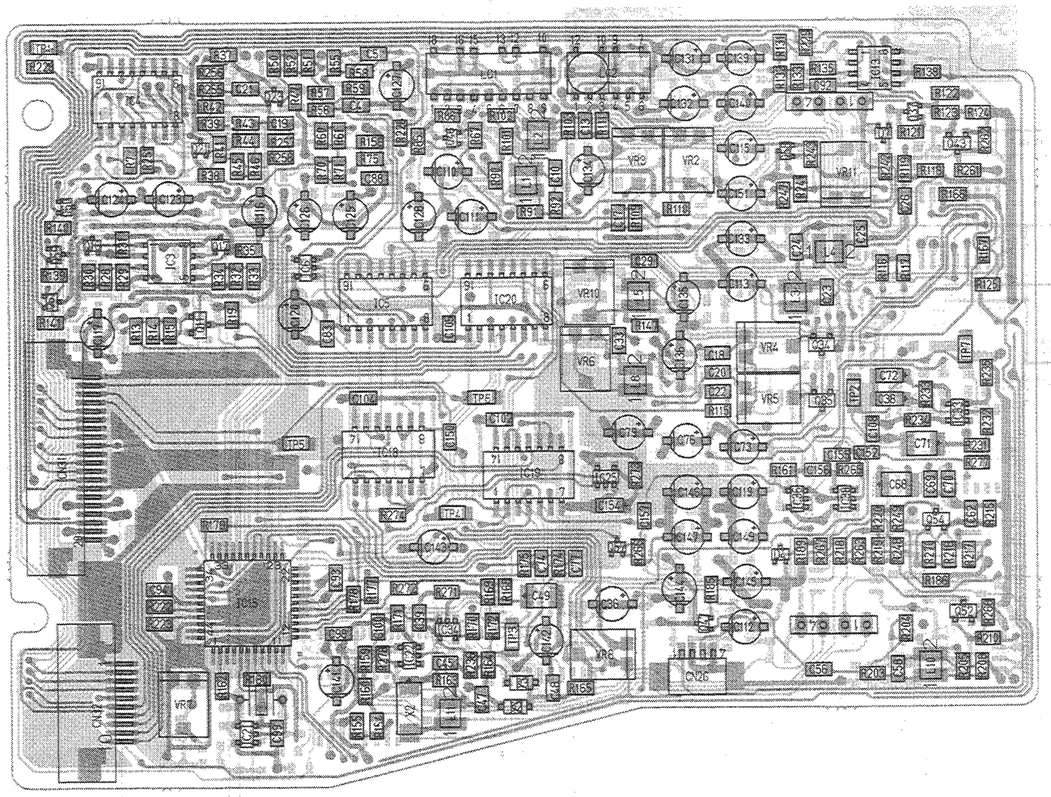

— Side (B) —

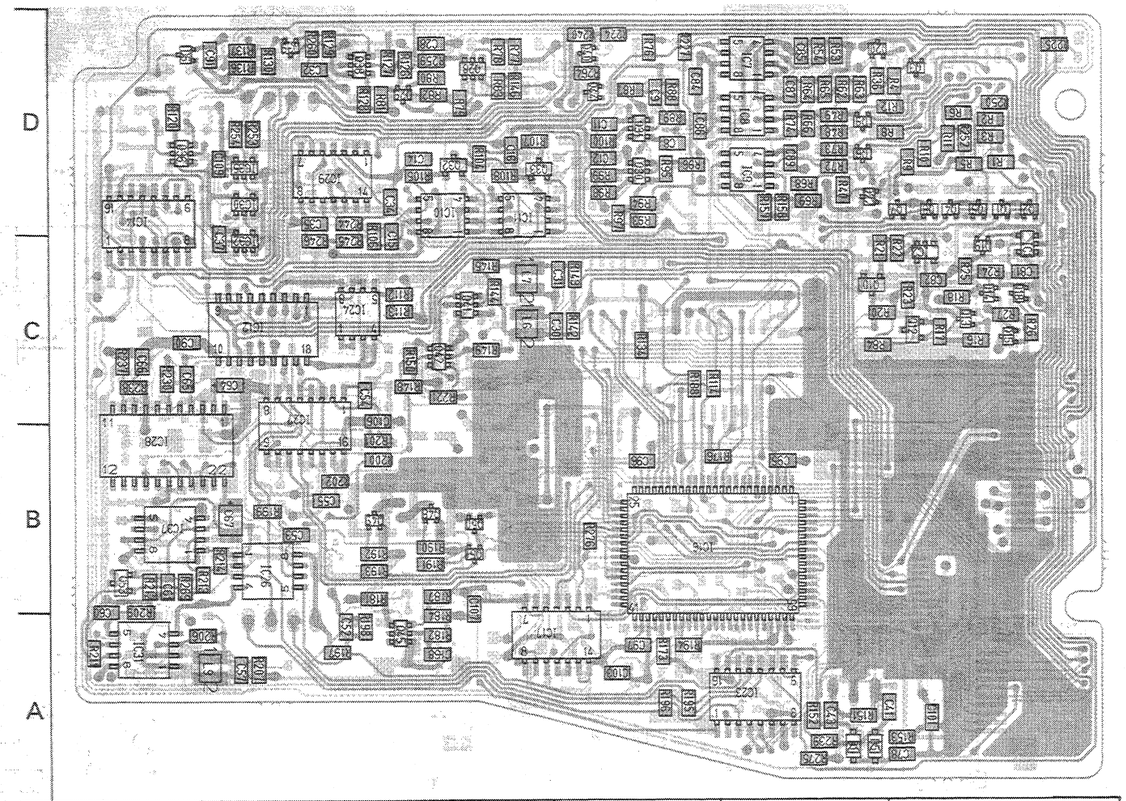

### • ADDRESS TABLE OF BOARD PARTS

Each address may have an address error by one interval.

A-1C
Side — Y axis
— X axis

| | |
|---|---|
| IC1 | B- 6C |
| IC2 | B- 6C |
| IC3 | A- 6C |
| IC4 | A- 6D |
| IC5 | A- 5C |
| IC6 | A- 5C |
| IC7 | B- 4D |
| IC8 | B- 4D |
| IC9 | B- 4D |
| IC10 | B- 3C |
| IC11 | B- 3C |
| IC12 | B- 2C |
| IC13 | A- 1D |
| IC14 | B- 1C |
| IC15 | A- 5A |
| IC16 | B- 4B |
| IC17 | B- 4A |
| IC18 | A- 5B |
| IC19 | A- 4B |
| IC20 | A- 4C |
| IC21 | A- 5A |
| IC22 | A- 4A |
| IC23 | B- 4A |
| IC24 | B- 2C |
| IC25 | A- 3B |
| IC26 | B- 2B |
| IC27 | B- 2B |
| IC28 | B- 1B |
| IC29 | B- 2D |
| IC30 | B- 2D |
| IC31 | B- 1A |
| IC32 | B- 2C |
| IC33 | A- 1B |
| IC34 | A- 4A |
| IC35 | B- 2D |
| IC36 | A- 2B |
| IC37 | B- 1B |
| IC38 | A- 2B |
| Q1 | B- 6C |
| Q2 | B- 6C |
| Q3 | B- 5D |
| Q4 | B- 6C |
| Q5 | B- 6C |
| Q6 | B- 5D |
| Q7 | B- 5C |
| Q8 | B- 6C |
| Q9 | B- 5D |
| Q10 | B- 5C |
| Q11 | A- 5C |
| Q12 | B- 5C |
| Q13 | B- 6C |
| Q14 | B- 6C |
| Q15 | B- 6C |
| Q16 | A- 6C |
| Q17 | A- 5C |
| Q18 | B- 6C |
| Q19 | B- 6C |
| Q20 | B- 5D |
| Q21 | A- 5D |
| Q22 | B- 5D |
| Q23 | A- 5D |
| Q28 | B- 3D |
| Q29 | B- 2D |
| Q30 | B- 4D |
| Q31 | B- 4D |
| Q32 | B- 3D |
| Q33 | B- 3D |
| Q34 | A- 2C |
| Q35 | A- 2B |
| Q36 | B- 1D |
| Q37 | A- 1D |
| Q38 | B- 2D |
| Q39 | B- 2D |
| Q40 | B- 4D |
| Q41 | B- 3C |
| Q42 | B- 3C |
| Q43 | A- 1D |
| Q44 | B- 4D |
| Q45 | B- 2A |
| Q46 | A- 4D |
| Q47 | A- 3A |
| Q48 | B- 3B |
| Q49 | B- 2B |
| Q50 | B- 3B |
| Q51 | B- 3B |
| Q52 | A- 1A |
| Q53 | B- 1B |
| Q54 | A- 1B |
| Q57 | A- 3B |
| Q58 | A- 2D |
| Q59 | A- 6C |
| Q60 | A- 6D |
| Q61 | A- 6C |
| D1 | B- 5A |
| D2 | A- 4A |
| D3 | A- 4A |
| D4 | A- 2B |
| D5 | B- 5A |
| D6 | B- 1D |
| D7 | A- 1D |
| R1 | B- 6D |
| R2 | B- 6D |
| R3 | B- 6D |
| R4 | B- 5D |
| R5 | B- 6D |
| R6 | B- 6D |
| R7 | A- 6D |
| R8 | B- 5D |
| R9 | B- 5D |
| R10 | B- 6D |
| R11 | B- 6D |
| R12 | B- 5D |
| R13 | A- 6C |
| R14 | A- 6C |
| R15 | A- 6C |
| R16 | B- 6C |
| R17 | B- 6C |
| R18 | B- 6C |
| R19 | A- 5C |
| R20 | B- 5C |
| R21 | B- 5C |
| R22 | B- 5C |
| R23 | B- 5C |
| R24 | B- 6C |
| R25 | B- 6C |
| R26 | B- 6C |
| R27 | B- 6C |
| R28 | A- 6C |
| R29 | A- 6C |
| R30 | A- 6C |
| R31 | A- 6C |
| R32 | A- 5C |
| R33 | A- 5C |
| R34 | A- 5C |
| R35 | A- 5C |
| R36 | B- 5D |
| R37 | A- 5D |
| R38 | A- 5D |
| R39 | A- 5D |
| R40 | B- 5D |
| R41 | A- 5D |
| R42 | A- 5D |
| R43 | A- 5D |
| R44 | A- 5D |
| R45 | A- 5D |
| R46 | A- 5D |
| R47 | A- 5D |
| R48 | B- 5D |
| R49 | B- 5D |
| R50 | A- 5D |
| R51 | A- 5D |
| R52 | A- 5D |
| R53 | B- 5D |
| R54 | B- 5D |
| R55 | A- 5D |
| R56 | A- 5D |
| R57 | A- 5D |
| R58 | A- 5D |
| R59 | A- 5D |
| R60 | A- 5D |
| R61 | A- 5D |
| R62 | B- 5D |
| R63 | B- 5D |
| R64 | B- 5D |
| R65 | B- 5D |
| R66 | B- 5D |
| R67 | A- 4D |
| R68 | B- 5D |
| R69 | B- 5D |
| R70 | A- 5D |
| R71 | A- 5D |
| R72 | B- 5D |
| R73 | B- 5D |
| R74 | B- 5D |
| R75 | A- 4D |
| R76 | B- 4D |
| R77 | B- 3D |
| R78 | B- 3D |
| R79 | B- 3D |
| R80 | B- 3D |
| R81 | B- 2D |
| R82 | B- 3D |
| R83 | B- 3D |
| R84 | B- 5C |
| R85 | A- 4D |
| R86 | A- 4D |
| R87 | B- 4D |
| R88 | B- 4D |
| R89 | B- 4D |
| R90 | A- 4D |
| R91 | A- 4C |
| R92 | A- 3D |
| R93 | B- 4C |
| R94 | B- 4D |
| R95 | B- 4D |
| R96 | B- 4D |
| R97 | B- 4C |
| R98 | B- 4D |
| R99 | B- 4D |
| R100 | B- 4D |
| R101 | A- 4D |
| R102 | A- 4D |
| R103 | A- 3D |
| R104 | B- 3D |
| R105 | B- 3D |
| R106 | B- 2C |
| R107 | B- 3D |
| R108 | B- 3D |
| R109 | A- 3C |
| R110 | A- 3D |
| R111 | A- 3D |
| R112 | B- 2C |
| R113 | B- 2C |
| R114 | B- 4C |
| R115 | A- 2B |
| R116 | A- 1C |
| R117 | A- 1C |
| R118 | A- 1D |
| R119 | A- 1D |
| R120 | B- 1D |
| R121 | A- 1D |
| R122 | A- 1D |
| R123 | A- 1D |
| R124 | A- 1D |
| R125 | A- 1C |
| R126 | B- 2D |
| R127 | B- 2D |
| R128 | B- 2D |
| R129 | B- 2D |
| R130 | B- 2D |
| R131 | A- 2D |
| R132 | A- 2D |
| R133 | A- 2D |
| R134 | B- 4C |
| R135 | A- 2D |
| R136 | B- 2D |
| R137 | B- 2D |
| R138 | A- 1D |
| R139 | A- 6C |
| R140 | A- 6C |
| R141 | A- 6C |
| R142 | B- 3C |
| R143 | B- 3C |
| R144 | B- 3C |
| R145 | B- 3C |
| R146 | B- 3D |
| R147 | A- 3C |
| R148 | B- 2C |
| R149 | B- 3C |
| R150 | B- 3C |
| R151 | B- 5A |
| R152 | B- 5A |
| R153 | B- 5A |
| R154 | A- 4A |
| R155 | A- 5A |
| R156 | A- 4D |
| R157 | B- 5C |
| R158 | B- 5C |
| R159 | A- 4A |
| R160 | A- 4A |
| R161 | A- 2B |
| R162 | A- 5A |
| R163 | A- 4A |
| R164 | A- 4A |
| R165 | A- 3A |
| R166 | A- 1D |
| R167 | A- 1C |
| R168 | A- 4A |
| R169 | A- 4A |
| R170 | A- 4A |
| R171 | A- 4A |
| R172 | A- 4A |
| R173 | B- 4A |
| R174 | A- 3B |
| R175 | A- 4B |
| R176 | B- 4B |
| R177 | A- 4A |
| R178 | A- 5A |
| R179 | A- 5B |
| R180 | A- 5A |
| R181 | B- 2A |
| R182 | B- 3A |
| R184 | B- 3A |
| R185 | A- 2A |
| R186 | A- 1B |
| R187 | B- 3A |
| R188 | B- 4C |
| R189 | A- 2B |
| R190 | B- 3B |
| R191 | B- 3B |
| R192 | B- 2B |
| R193 | B- 2B |
| R194 | B- 4A |
| R195 | B- 4A |
| R196 | B- 4A |
| R197 | B- 2A |
| R198 | B- 2A |
| R199 | B- 2B |
| R200 | B- 2B |
| R201 | B- 2B |
| R202 | B- 2B |
| R203 | A- 2A |
| R204 | A- 1A |
| R205 | A- 1A |
| R206 | B- 1A |
| R207 | B- 2A |
| R208 | A- 1A |
| R209 | B- 1A |
| R210 | A- 1A |
| R211 | B- 1A |
| R212 | B- 1A |
| R213 | B- 1B |
| R214 | B- 1B |
| R215 | A- 1B |
| R216 | A- 1B |
| R217 | A- 1B |
| R218 | A- 2B |
| R219 | A- 1B |
| R220 | A- 1B |
| R221 | B- 3B |
| R222 | A- 6A |
| R223 | A- 6A |
| R224 | B- 4D |
| R225 | B- 6D |
| R226 | A- 4D |
| R227 | B- 4D |
| R228 | A- 6D |
| R229 | A- 2D |
| R230 | B- 1C |
| R231 | A- 1B |
| R232 | A- 1B |
| R233 | A- 1C |
| R234 | A- 1B |
| R235 | A- 1C |
| R236 | A- 4A |
| R237 | B- 1C |
| R238 | B- 1C |
| R239 | B- 5A |
| R240 | B- 4D |
| R241 | A- 2D |
| R242 | A- 1D |
| R243 | A- 2D |
| R244 | B- 2C |
| R245 | B- 2C |
| R246 | B- 2C |
| R247 | A- 2D |
| R248 | A- 1B |
| R249 | A- 1B |
| R250 | B- 6D |
| R251 | A- 6D |
| R252 | B- 6D |
| R253 | B- 2D |
| R254 | B- 2D |
| R255 | A- 5D |
| R256 | A- 5D |
| R257 | A- 5D |
| R258 | A- 5D |
| R259 | B- 3D |
| R260 | B- 2D |
| R261 | A- 1D |
| R262 | A- 1D |
| R263 | A- 2B |
| R264 | B- 4D |
| R265 | A- 2B |
| R266 | A- 3B |
| R267 | A- 2B |
| R268 | A- 1A |
| R269 | B- 1A |
| R270 | A- 1B |
| R271 | A- 4A |
| R272 | A- 4B |
| R273 | A- 3B |
| R274 | A- 4B |
| R275 | B- 5A |
| R276 | B- 4B |
| R277 | A- 1B |
| VR2 | A- 3D |
| VR3 | A- 3D |
| VR4 | A- 2C |
| VR5 | A- 2C |
| VR6 | A- 3C |
| VR7 | A- 6A |
| VR8 | A- 3A |
| VR10 | A- 3C |
| VR11 | A- 2D |
| C4 | A- 5D |
| C5 | A- 4D |
| C8 | B- 4D |
| C9 | B- 4D |
| C10 | A- 3D |
| C11 | B- 4D |
| C12 | B- 4D |
| C13 | A- 3D |
| C14 | B- 3D |
| C15 | B- 2C |
| C16 | B- 3D |
| C17 | A- 3C |
| C18 | A- 2C |
| C19 | A- 5D |
| C20 | A- 2C |
| C21 | A- 5D |
| C22 | A- 2C |
| C23 | A- 2C |
| C24 | A- 2C |
| C25 | A- 2C |
| C26 | A- 1D |
| C28 | B- 3D |
| C29 | A- 3C |
| C30 | B- 3C |
| C31 | B- 3C |
| C32 | B- 2D |
| C33 | A- 3C |
| C34 | B- 2D |
| C35 | B- 2C |
| C36 | A- 3A |
| C37 | B- 1C |
| C38 | A- 1B |
| C39 | A- 4A |
| C41 | B- 5A |
| C43 | B- 5A |
| C45 | A- 4A |
| C47 | A- 4A |
| C48 | A- 3A |
| C49 | A- 3A |
| C52 | B- 2A |
| C53 | B- 2B |
| C54 | B- 2B |
| C55 | B- 2B |
| C56 | A- 2A |
| C57 | B- 2A |
| C58 | A- 1A |
| C60 | B- 1A |
| C61 | B- 1A |
| C62 | A- 1B |
| C64 | B- 1C |
| C65 | B- 1C |
| C66 | B- 1C |
| C67 | B- 1B |
| C68 | A- 1B |
| C69 | A- 1B |
| C70 | A- 1B |
| C71 | A- 1B |
| C72 | A- 1C |
| C73 | A- 2B |
| C74 | A- 3B |
| C76 | A- 3B |
| C77 | A- 3B |
| C78 | B- 5A |
| C79 | A- 3B |
| C81 | B- 6C |
| C82 | B- 6C |
| C83 | A- 5C |
| C84 | B- 4D |
| C85 | B- 5D |
| C86 | B- 4D |
| C87 | B- 5D |
| C88 | A- 4D |
| C89 | B- 5D |
| C90 | B- 1C |
| C91 | B- 1D |
| C92 | A- 2D |
| C93 | A- 5B |
| C94 | A- 6B |
| C95 | B- 5B |
| C96 | B- 4B |
| C97 | B- 4A |
| C98 | A- 5A |
| C99 | A- 5A |
| C100 | A- 4A |
| C101 | B- 6A |
| C102 | A- 4B |
| C103 | B- 4A |
| C104 | A- 4C |
| C105 | A- 4C |
| C106 | B- 2B |
| C107 | B- 3A |
| C108 | A- 2B |
| C109 | B- 1D |
| C110 | A- 4D |
| C111 | A- 4C |
| C112 | A- 2A |
| C113 | A- 2C |
| C115 | A- 2D |
| C116 | A- 5D |
| C117 | A- 6C |
| C119 | A- 2B |
| C120 | A- 5C |
| C123 | A- 6D |
| C124 | A- 6D |
| C125 | A- 5C |
| C126 | A- 5C |
| C127 | A- 4D |
| C128 | A- 4C |
| C131 | A- 3D |
| C132 | A- 3D |
| C133 | A- 2C |
| C134 | A- 3D |
| C135 | A- 3C |
| C136 | A- 3C |
| C139 | A- 2D |
| C140 | A- 2D |
| C141 | A- 5A |
| C142 | A- 3A |
| C143 | A- 4B |
| C144 | A- 3A |
| C145 | A- 2B |
| C146 | A- 3B |
| C147 | A- 3B |
| C149 | A- 2B |
| C150 | A- 4B |
| C151 | A- 2D |
| C152 | A- 2B |
| C154 | A- 3B |
| C155 | A- 2B |
| C156 | A- 2B |
| C157 | A- 3B |
| C168 | B- 3A |
| L1 | A- 4D |
| L2 | A- 3D |
| L3 | A- 2C |
| L4 | A- 2C |
| L5 | A- 3C |
| L6 | B- 3C |
| L7 | B- 3C |
| L8 | A- 3C |
| L9 | B- 1A |
| L10 | A- 1A |
| L11 | A- 4A |
| TP1 | A- 6D |
| TP2 | A- 2C |
| TP3 | A- 4A |
| TP4 | A- 4B |
| TP5 | A- 5B |
| TP6 | A- 4C |
| TP7 | A- 1C |
| LC1 | A- 4D |
| LC2 | A- 3D |
| CN26 | A- 3A |
| CN29 | A- 2A |
| CN30 | A- 2D |
| CN31 | A- 6B |
| CN32 | A- 6A |
| X1 | A- 5A |
| X2 | A- 4A |

### Chip parts pin arrangement (Top view)

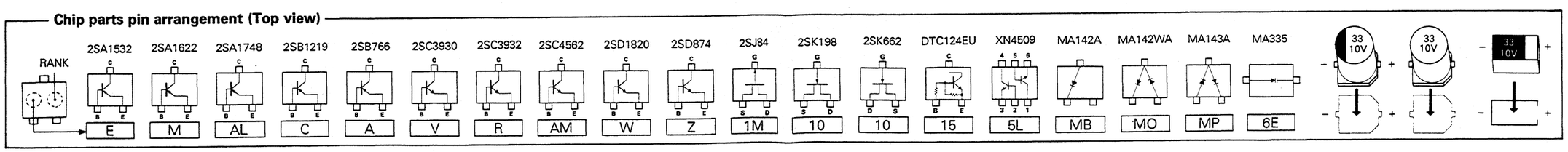

## 6.16 SE SCHEMATIC DIAGRAM 10
### (Sync Signal Generator and Color Encoder)

Notes:
- In the diagram, resistors and capacitors whose resistance or capacitance is written following a letter N or P are used in the NTSC model (indicated by N) and the PAL model (indicated by P) respectively.
- In the diagram, parts marked with asterisk (*) are used only in the NTSC model, while those marked with black star (★) are used only in the PAL model.

**Main function of SE board:**
- Sync. signal generation
- Genlock circuit
- Color encoding
- Color bars signal generation

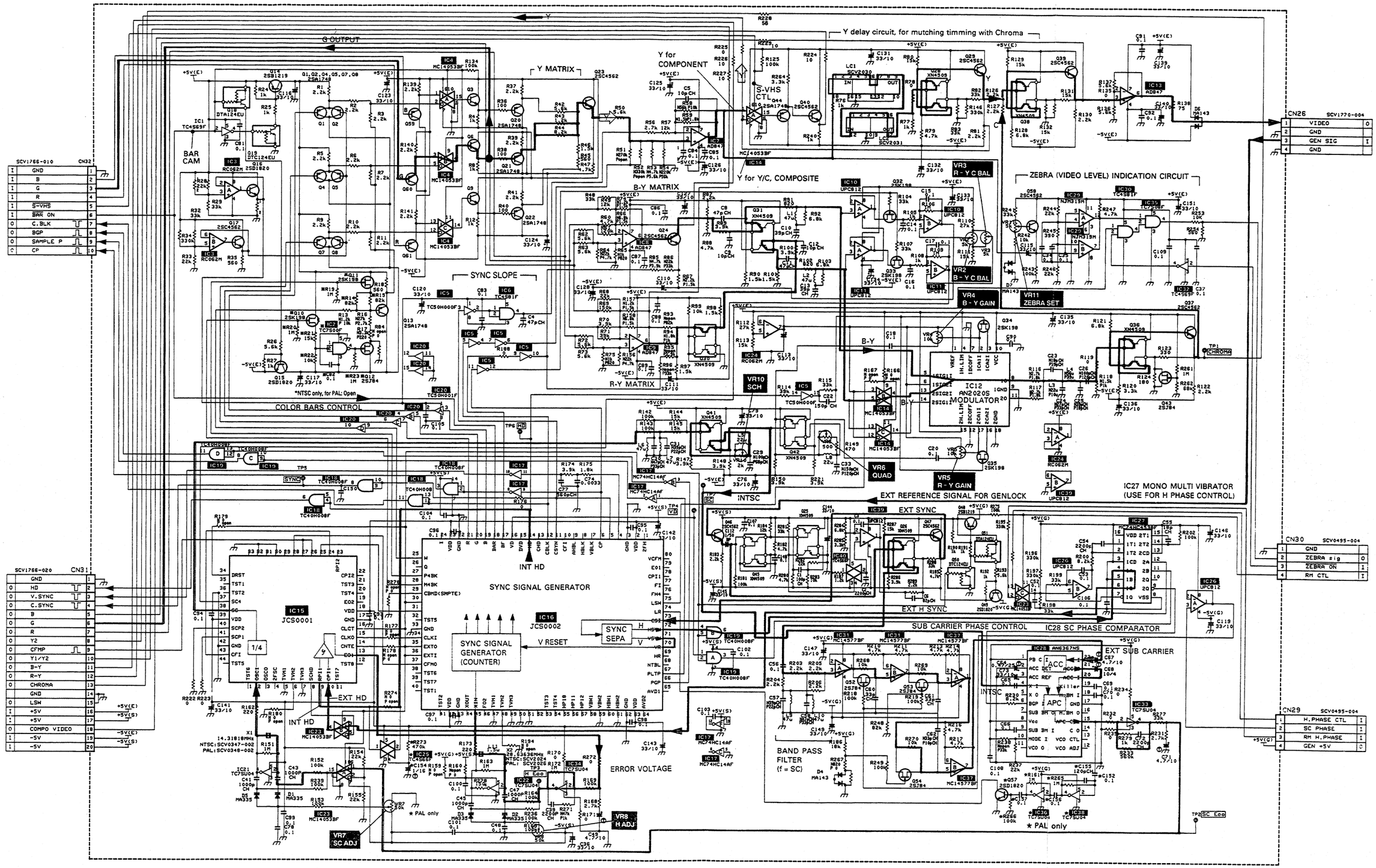




6-17 **Revised in Oct. 1992**

## 6.17 CP1/CP2 CIRCUIT BOARDS

• **ADDRESS TABLE OF BOARD PARTS**

Each address may have an address error by one interval.

A-1C
Side — Y axis
X axis

| | |
|---|---|
| IC1 | A- 3F |
| IC2 | A- 1D |
| IC3 | B- 2C |
| IC4 | A- 1A |
| IC5 | A- 1C |
| IC6 | B- 2E |
| IC7 | A- 3A |
| IC8 | B- 4B |
| IC9 | A- 4B |
| IC10 | A- 2C |
| IC11 | B- 2D |
| IC13 | A- 5C |
| IC14 | B- 6D |
| IC15 | A- 5D |
| IC16 | A- 4D |
| IC17 | A- 4D |
| IC18 | A- 4E |
| IC19 | A- 4C |
| IC20 | B- 3D |
| IC21 | A- 1F |
| IC22 | B- 2E |
| IC23 | B- 5E |
| IC24 | A- 2A |
| IC28 | A- 3C |
| IC29 | A- 3B |
| IC31 | B- 5D |
| IC32 | B- 4E |
| IC37 | A- 2E |
| Q3 | B- 6B |
| Q4 | B- 6B |
| Q5 | A- 4C |
| Q6 | A- 5C |
| Q7 | B- 2D |
| Q8 | B- 2E |
| Q9 | B- 2E |
| Q10 | A- 4A |
| D3 | B- 4C |
| D4 | B- 5B |
| D5 | B- 4D |
| D6 | B- 4E |
| D7 | A- 5D |
| D8 | B- 4D |
| D9 | A- 3D |
| D10 | B- 3D |
| D11 | B- 6C |
| D12 | B- 4C |
| D13 | B- 3D |
| D14 | B- 4D |
| D15 | B- 6D |
| D18 | A- 6C |
| D20 | B- 6D |
| VR1 | A- 5D |
| VR2 | A- 5D |
| VR3 | A- 4C |
| VR5 | A- 4E |

• **CP1 board**

**— Side (A) —** **— Side (B) —**

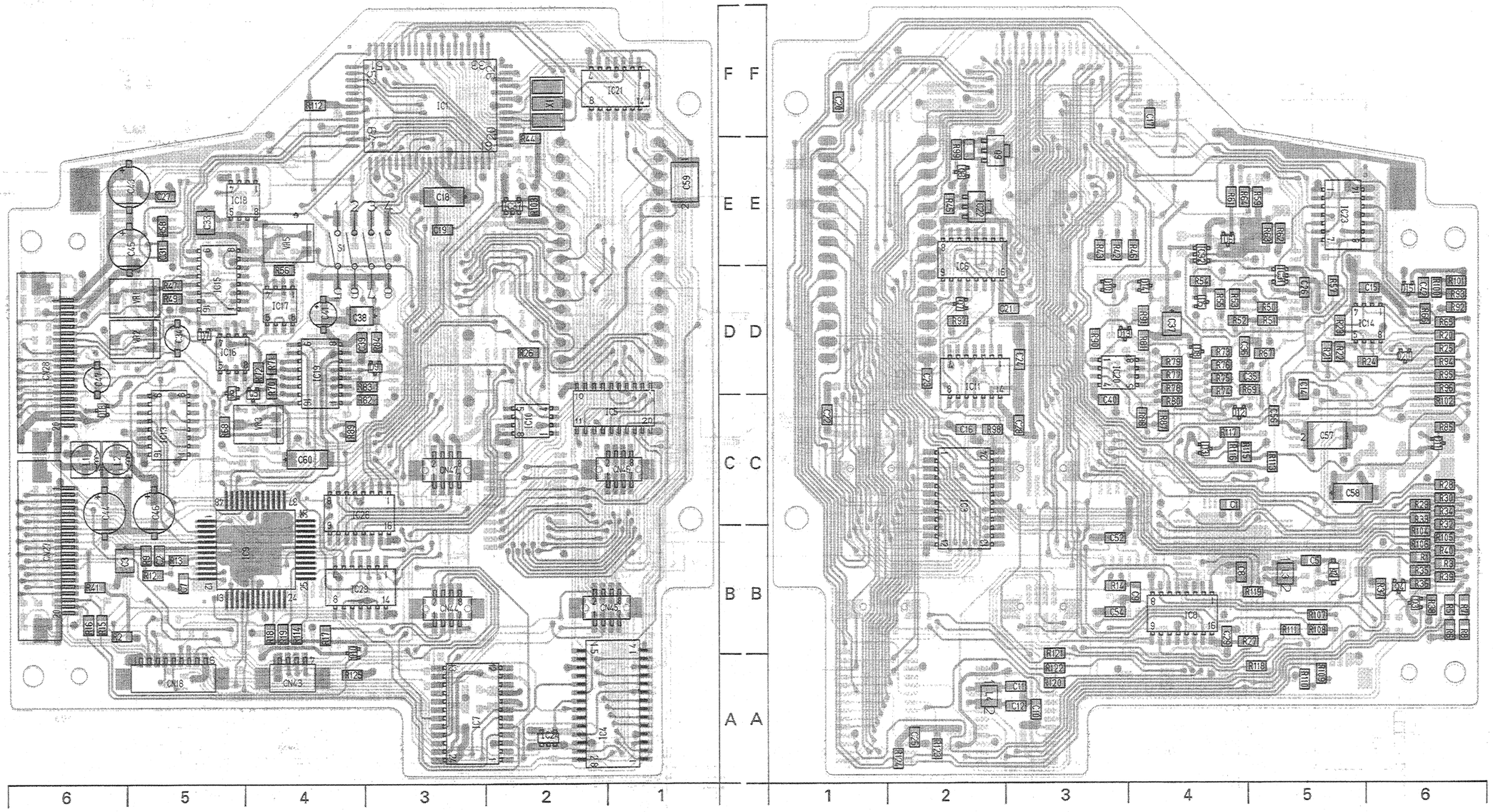


**Chip parts pin arrangement (Top view)**

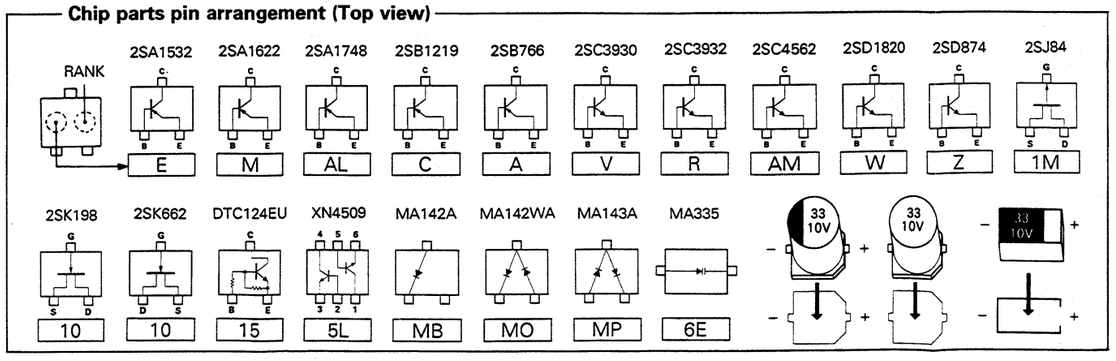


• **CP2 board**

**— Side (A) —** **— Side (B) —**

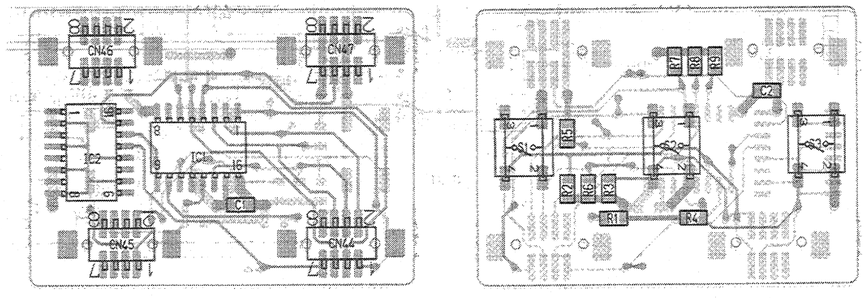

## 6.18 CP1/CP2 SCHEMATIC DIAGRAMS 11 / 12
### (CPU circuit)

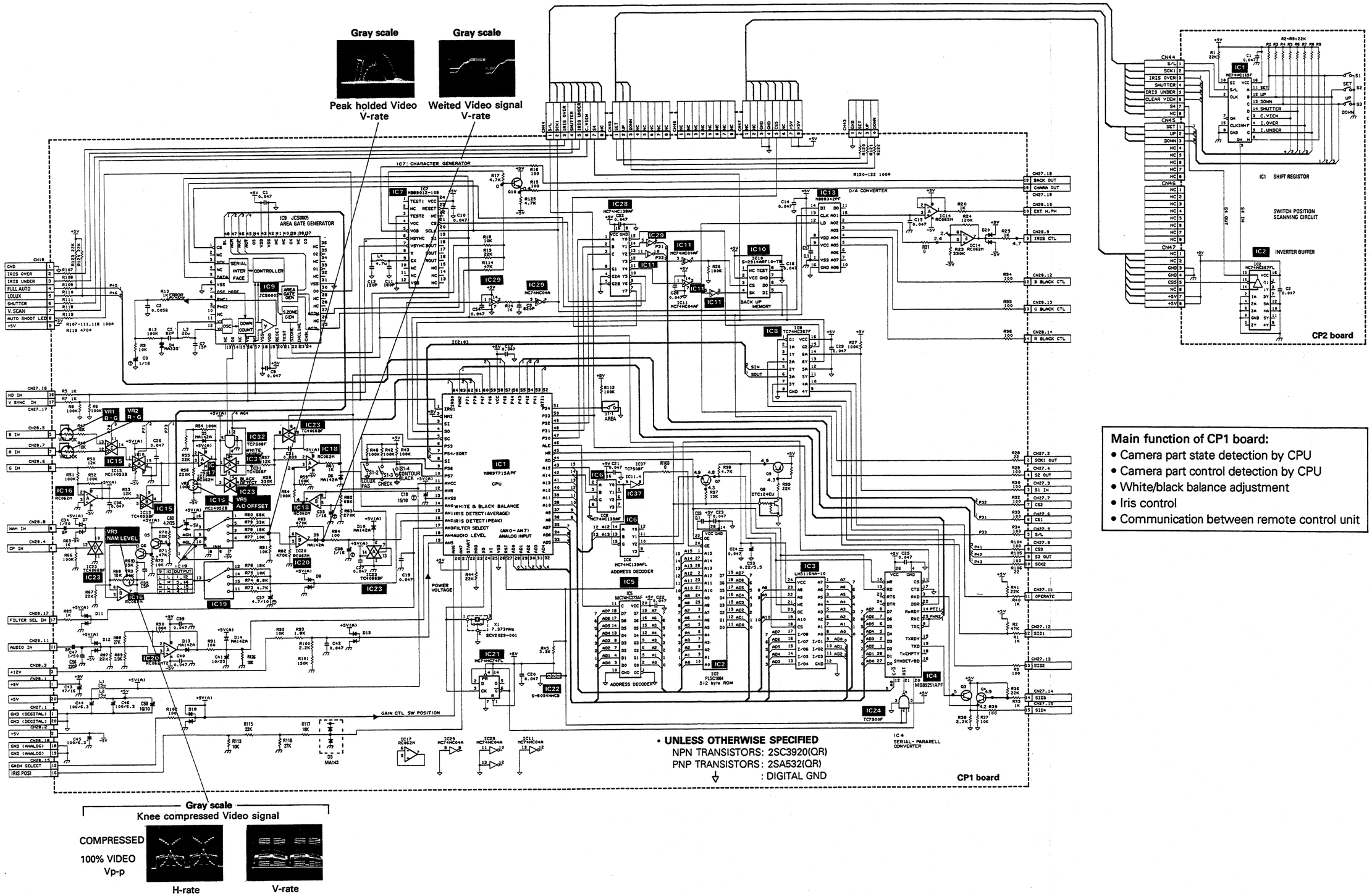


**Main function of CP1 board:**

- Camera part state detection by CPU
- Camera part control detection by CPU
- White/black balance adjustment
- Iris control
- Communication between remote control unit

## 6.19 PS CIRCUIT BOARD

**• ADDRESS TABLE OF BOARD PARTS**

Each address may have an address error by one interval.

A-1C
Side — Y axis
X axis

| | | | | | |
|---|---|---|---|---|---|
| IC1 | B- 2E | R31 | B- 3A | TP2 | A- 4B |
| IC2 | B- 2A | R32 | B- 3A | TP3 | A- 4A |
| IC3 | B- 4C | R33 | B- 3B | | |
| IC4 | B- 1E | R34 | B- 4B | T1 | A- 3E |
| IC5 | B- 1E | R35 | B- 4B | | |
| | | R36 | B- 2F | CP1 | A- 4D |
| Q1 | B- 2C | R37 | B- 1F | CP2 | A- 4F |
| Q2 | B- 2C | R38 | B- 3F | CP3 | A- 4F |
| Q3 | B- 2C | R39 | B- 4F | | |
| Q4 | B- 1B | R40 | A- 3E | CN2 | A- 2D |
| Q5 | B- 1B | R41 | A- 1F | | |
| Q6 | B- 3D | R42 | A- 1F | | |
| Q7 | B- 2D | R43 | B- 4C | | |
| Q8 | B- 2B | R44 | B- 4C | | |
| Q9 | B- 3A | R45 | B- 3F | | |
| Q10 | B- 1F | R46 | B- 3D | | |
| Q11 | B- 1F | R47 | B- 3F | | |
| Q12 | B- 1F | | | | |
| Q13 | B- 1F | VR1 | A- 4A | | |
| Q14 | B- 4E | | | | |
| Q15 | B- 4D | C2 | B- 3D | | |
| Q16 | B- 3C | C3 | A- 2E | | |
| Q17 | B- 3F | C4 | B- 2E | | |
| Q18 | B- 3F | C5 | A- 2E | | |
| Q19 | B- 3F | C6 | B- 2E | | |
| Q20 | B- 3F | C7 | A- 2E | | |
| | | C8 | A- 2B | | |
| D1 | A- 3C | C9 | A- 2A | | |
| D2 | A- 3C | C10 | A- 2A | | |
| D3 | B- 1F | C11 | A- 2A | | |
| D4 | A- 4F | C12 | A- 2B | | |
| D5 | A- 4F | C13 | A- 3D | | |
| D6 | A- 4D | C14 | B- 3A | | |
| D7 | A- 4D | C15 | A- 2B | | |
| D8 | A- 4F | C16 | A- 3B | | |
| D9 | A- 4F | C17 | A- 3B | | |
| D10 | B- 4C | C18 | A- 3B | | |
| | | C19 | A- 4A | | |
| R1 | B- 2E | C20 | A- 4A | | |
| R2 | B- 3E | C23 | A- 4B | | |
| R3 | B- 2E | C24 | B- 1E | | |
| R4 | B- 3E | C25 | A- 1F | | |
| R5 | B- 2E | C26 | A- 1F | | |
| R6 | B- 2E | C27 | A- 3E | | |
| R7 | B- 2E | C28 | A- 3E | | |
| R8 | B- 2C | C29 | A- 3E | | |
| R9 | B- 2E | C30 | A- 3E | | |
| R10 | B- 2C | C31 | A- 4D | | |
| R11 | B- 2C | C32 | A- 4C | | |
| R12 | B- 2C | C33 | A- 2F | | |
| R13 | B- 2C | C34 | A- 2F | | |
| R14 | B- 2C | C35 | A- 4B | | |
| R15 | B- 2C | C36 | A- 1C | | |
| R16 | B- 2A | C37 | A- 2D | | |
| R17 | B- 2A | C38 | B- 4B | | |
| R18 | B- 2A | C39 | B- 4C | | |
| R19 | B- 1B | | | | |
| R20 | B- 1B | L1 | A- 1C | | |
| R21 | B- 4A | L2 | A- 2C | | |
| R22 | B- 4B | L3 | A- 1A | | |
| R23 | B- 4A | L4 | A- 4C | | |
| R24 | B- 4A | L5 | A- 3A | | |
| R25 | B- 2D | L6 | A- 3E | | |
| R26 | B- 2D | L7 | A- 2E | | |
| R27 | B- 2D | L8 | A- 4C | | |
| R28 | B- 2D | L9 | A- 2F | | |
| R29 | B- 3B | | | | |
| R30 | B- 3B | TP1 | A- 4B | | |

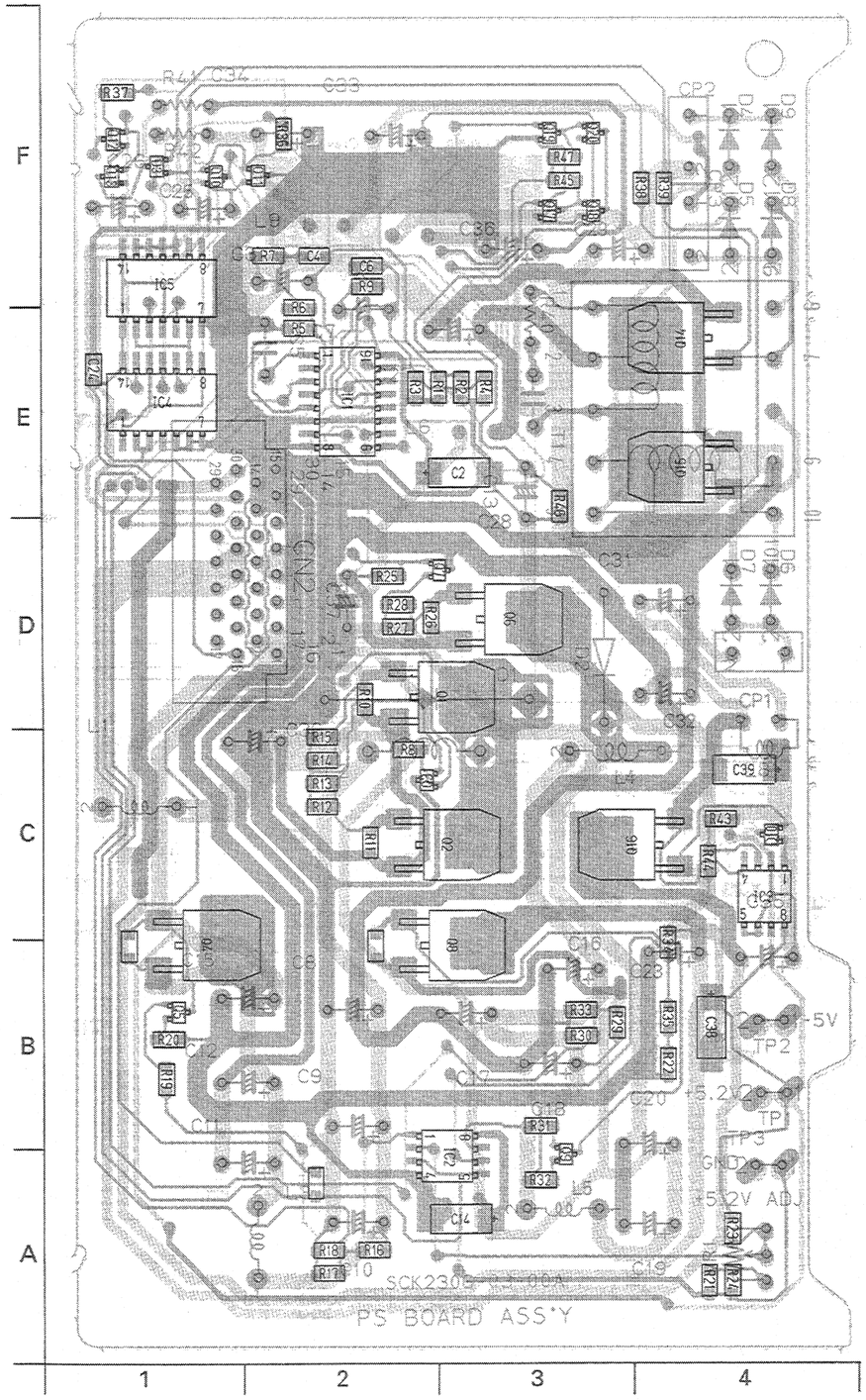

## 6.20 PS SCHEMATIC DIAGRAM 1 3
**(Power Supply)**

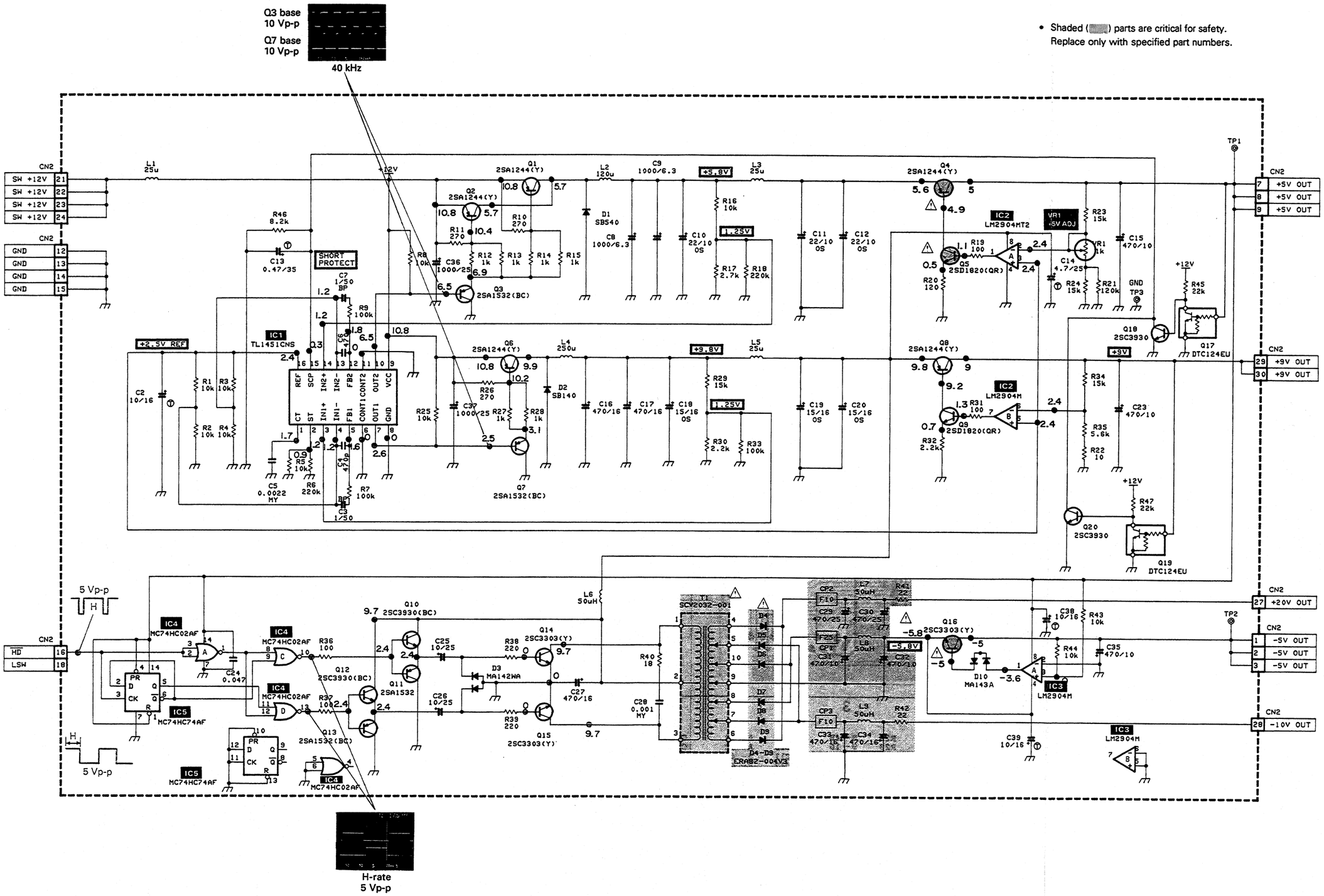

## 6.21 MT1/IF/SW CIRCUIT BOARDS

• MT1 board

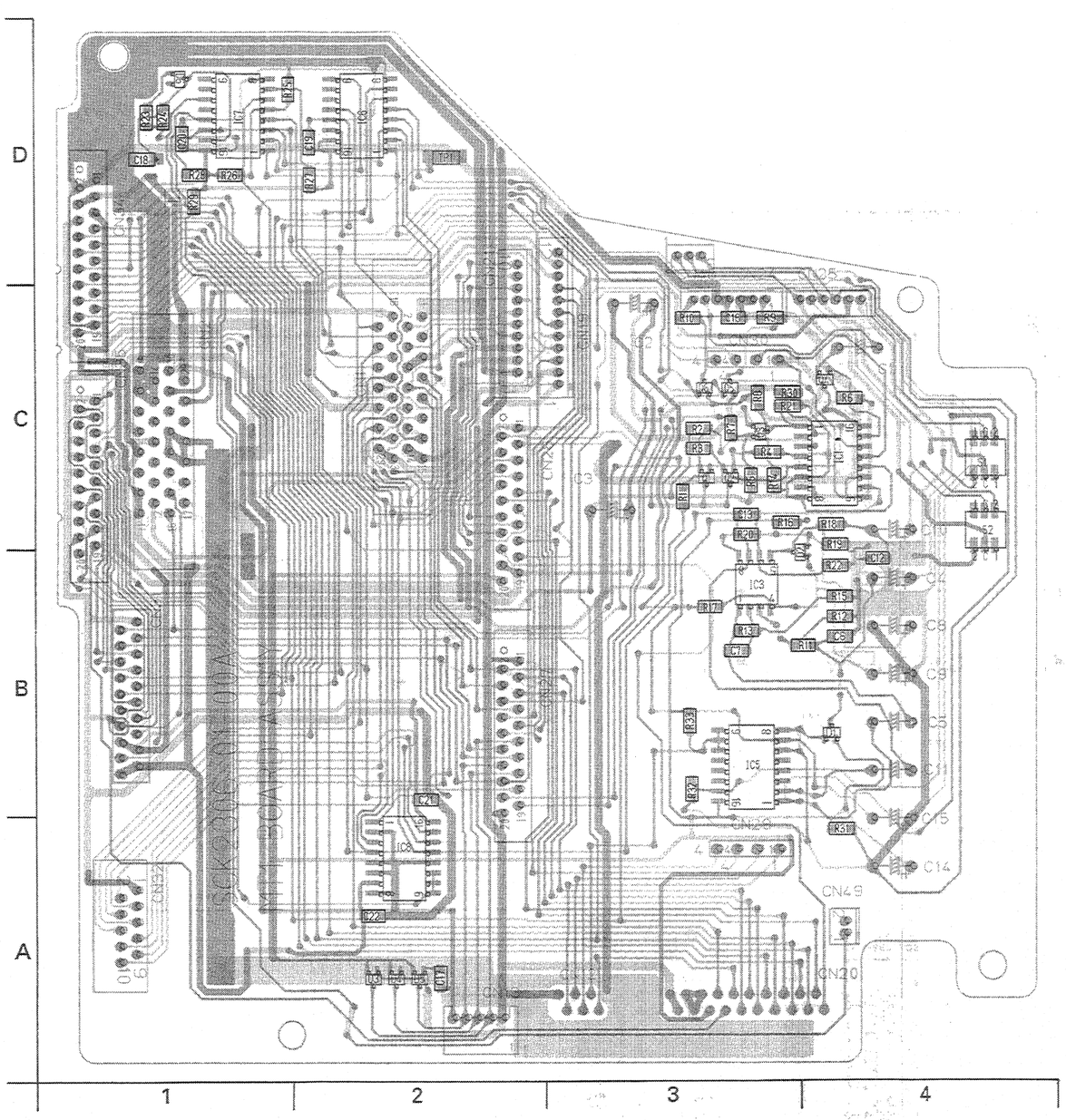


• IF board

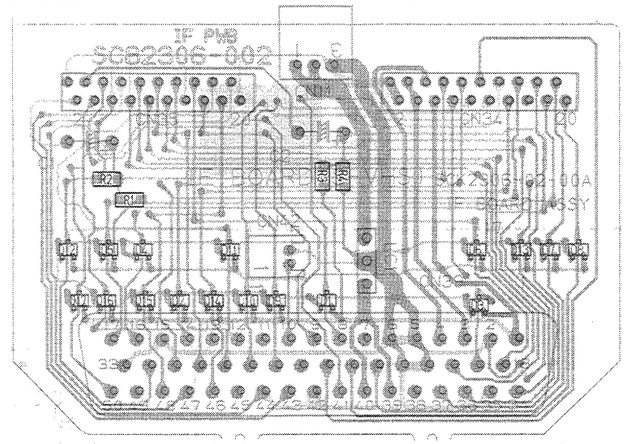


• SW2 board

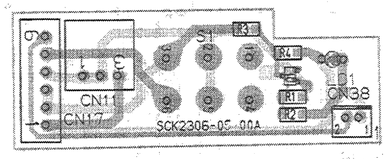


• SW4 board

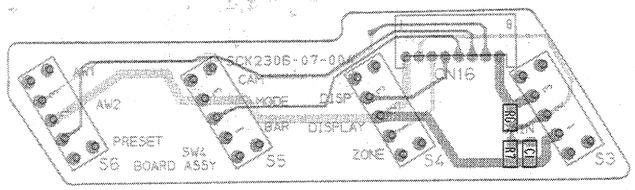


• SW5 board

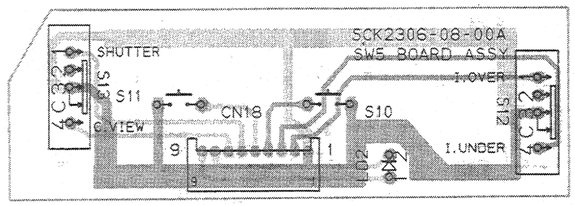


• SW6 board

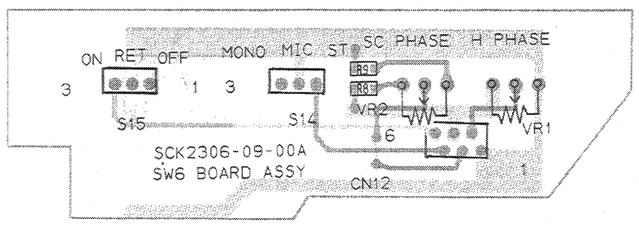


• **ADDRESS TABLE OF BOARD PARTS**

Each address may have an address error by one interval.

A-1C
Side — Y axis
X axis

| | | | | | | | | | |
|---|---|---|---|---|---|---|---|---|---|
| IC1 | B- 4C | R1 | B- 3C | R22 | B- 4B | C9 | A- 4B | CN2 | A- 1C |
| IC3 | B- 3B | R2 | B- 3C | R23 | B- 1D | C10 | A- 4C | CN12 | A- 3A |
| IC5 | B- 3A | R3 | B- 3C | R24 | B- 1D | C11 | A- 4B | CN13 | A- 2A |
| IC6 | B- 2D | R4 | B- 3C | R25 | B- 1D | C12 | B- 4B | CN19 | A- 3C |
| IC7 | B- 1D | R5 | B- 3C | R26 | B- 1D | C13 | B- 3C | CN20 | A- 4A |
| IC8 | B- 2A | R6 | B- 4C | R27 | B- 2D | C14 | A- 4A | CN21 | A- 2C |
| | | R7 | B- 3C | R28 | B- 1D | C15 | A- 4A | CN24 | A- 3C |
| Q1 | B- 3C | R8 | B- 3C | R29 | B- 1D | C16 | B- 3C | CN25 | A- 4C |
| Q2 | B- 3C | R9 | B- 3C | R30 | B- 4C | C17 | B- 2A | CN27 | A- 2B |
| Q3 | B- 3C | R10 | B- 3C | R31 | B- 4A | C18 | B- 1D | CN28 | A- 2C |
| Q4 | B- 4C | R11 | B- 4B | R32 | B- 3B | C19 | B- 2D | CN29 | A- 3A |
| Q5 | B- 3C | R12 | B- 4B | R33 | B- 3B | C20 | B- 1D | CN30 | A- 3C |
| Q6 | B- 3C | R13 | B- 3B | | | C21 | B- 2A | CN31 | A- 1B |
| | | R14 | B- 3C | C1 | A- 4C | C22 | B- 2A | CN32 | A- 1A |
| D1 | B- 4B | R15 | B- 4B | C2 | A- 3C | | | CN34 | A- 1D |
| D2 | B- 4B | R16 | B- 3C | C3 | A- 3C | TP1 | B- 2D | CN35 | A- 1C |
| D3 | B- 2A | R17 | B- 3B | C4 | A- 4B | | | CN48 | A- 3D |
| D4 | B- 2A | R18 | B- 4C | C5 | A- 4B | S1 | B- 4C | CN49 | A- 4A |
| D5 | B- 2A | R19 | B- 4B | C6 | B- 4B | S2 | B- 4C | | |
| D6 | B- 1D | R20 | B- 3C | C7 | B- 3B | | | | |
| | | R21 | B- 4C | C8 | A- 4B | CN1 | A- 2C | | |

## 6.22 MT2 CIRCUIT BOARD

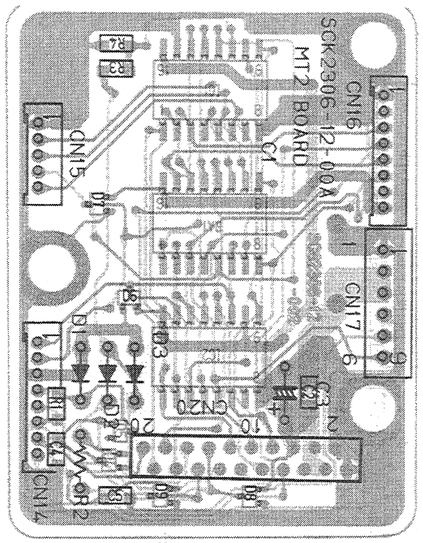


## 6.23 MT2 SCHEMATIC DIAGRAM 16
**(Mother board No.2)**

Main function of MT2 board:
- Switch state detection
- Parallel-serial conversion

CN14 TO LENS: 1 LENS RETURN, 2 VTR START, 3 GND, 4 LENS AUTO, 5 IRIS CTL, 6 SW 12V OUT, 7 IRIS POSI, 8 LENS Y

CN17: 1 GND, 2 SW 12V, 3 SW 12V, 4 UN SW 12V, 5 ST-BY 12V IN, 6 VTR TRIG 2

CN16 TO SW BOARD: 1 GND, 2 GAIN IN, 3 DISP CHG, 4 ZONE CTL, 5 BAR/CAM, 6 AUTO W.1, 7 PRESET, 8 +5V

CN20 TO MT1 BOARD: 1 GND, 2 GND, 3 SW 12V, 4 SW 12V, 5 SW 12V, 6 +5V, 7 LENS Y IN, 8 CALL, 9 RET SW, 10 SCK1, 11 S1, 12 S/L, 13 ST-BY, 14 LENS AUTO, 15 IRIS CTL, 16 SAVE, 17 MII/HI-8, 18 RM, 19 GAIN SEL, 20 IRIS POSI

CN15 TO SW BOARD: 1 GND, 2 AUTO WHITE, 3 AUTO SET, 4 VTR TRIG 1, 5 ZEBRA ON/OFF

IC1 MC74HC165F: A SI, B CLKINH, C QH, D GND, E VCC, F S/L, G CLK, H QH

IC2 MC74HC165F: A SI, B CLKINH, C QH, D GND, E VCC, F S/L, G CLK, H QH

RA1 22K NAB151J-223

| | | | |
|---|---|---|---|
| IC2 | 1 | H | CALL |
| | 2 | G | VTR TRG2 |
| | 3 | F | PRESET |
| | 4 | E | AUTO W.I |
| | 5 | D | MII/HI-8 |
| | 6 | C | ZONE |
| | 7 | B | RM |
| | 8 | A | RETURN |
| IC1 | 9 | H | ZEBRA ON |
| | 10 | G | AUTO SET |
| | 11 | F | AUTO WHITE |
| | 12 | E | DISP CHG |
| | 13 | D | BAR/CAM |
| | 14 | C | VTR START |
| | 15 | B | VTR TRGI |
| | 16 | A | SAVE |

D2 : HZ3BL
D4 : MA142WK
D5 : MA142A
D6 – D9 : MA143A

## 6.24 MT1 SCHEMATIC DIAGRAM 1 5
**(Mother board No.1)**

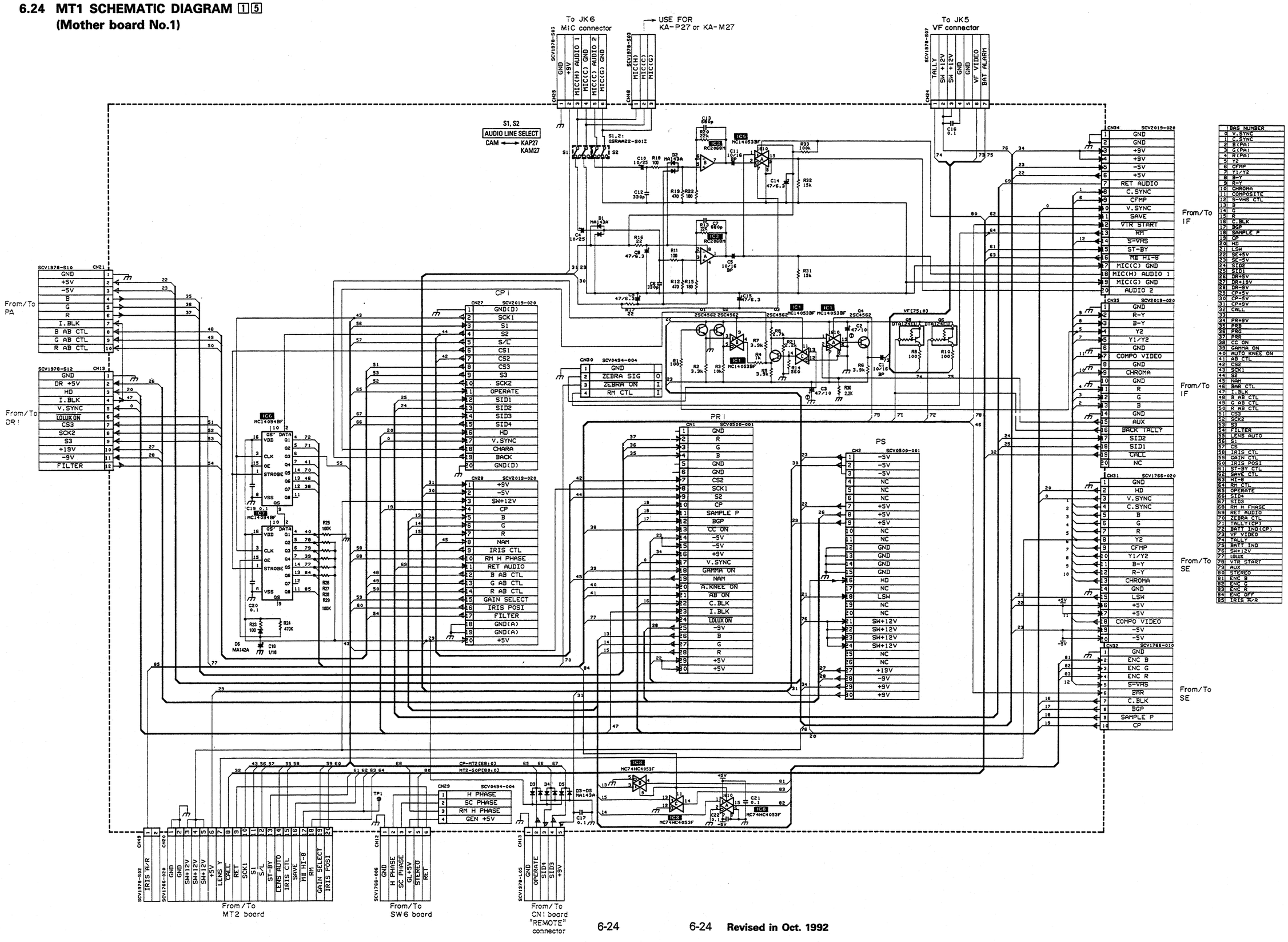

## 6.25 OVERALL WIRING DIAGRAM (Including schematic diagrams of SW1 to SW6, CN1, CN2 AND IFboards)

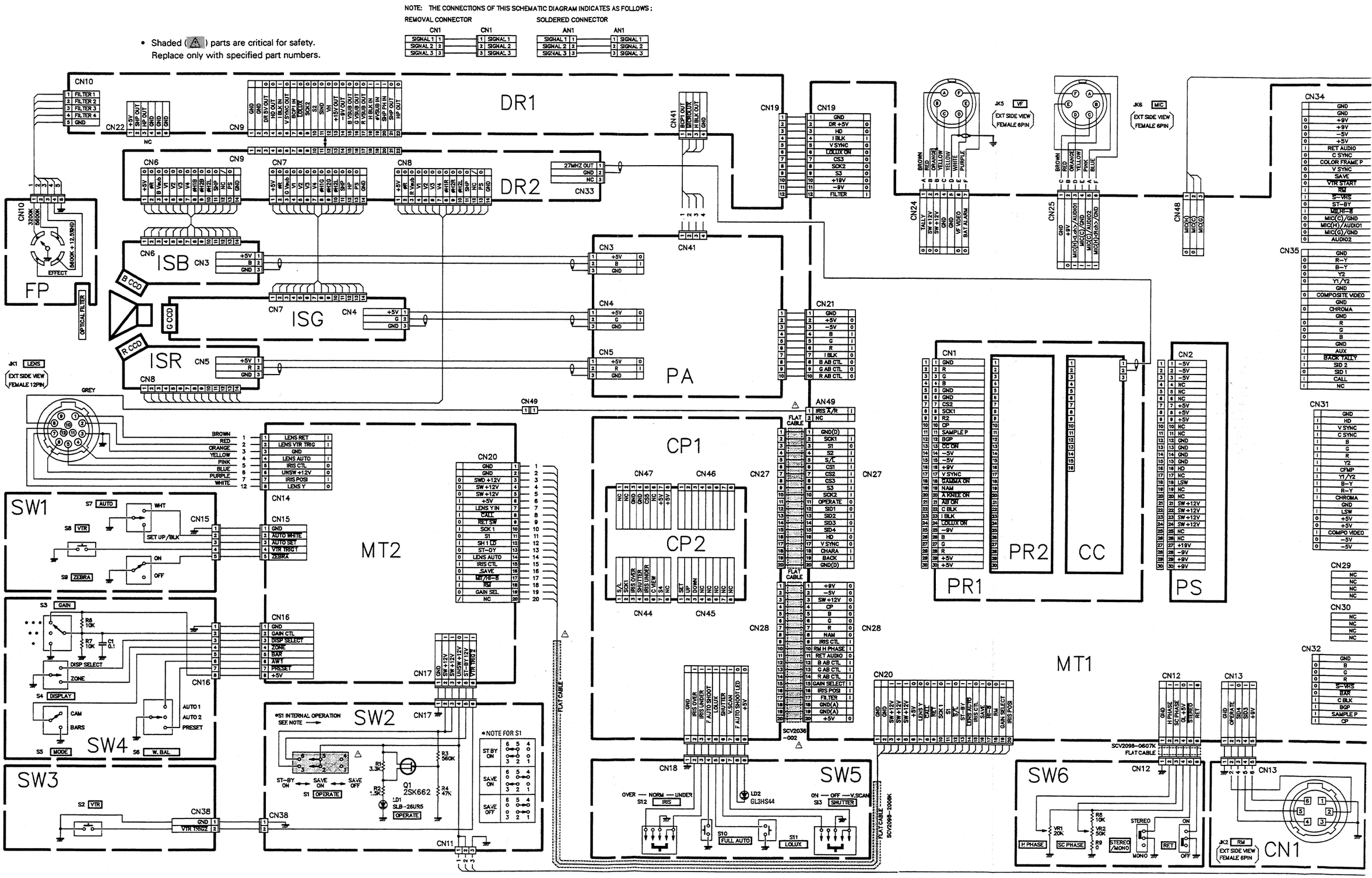

• IFS board and IFM board are built in the KA-P27/KK-M27 (optional).

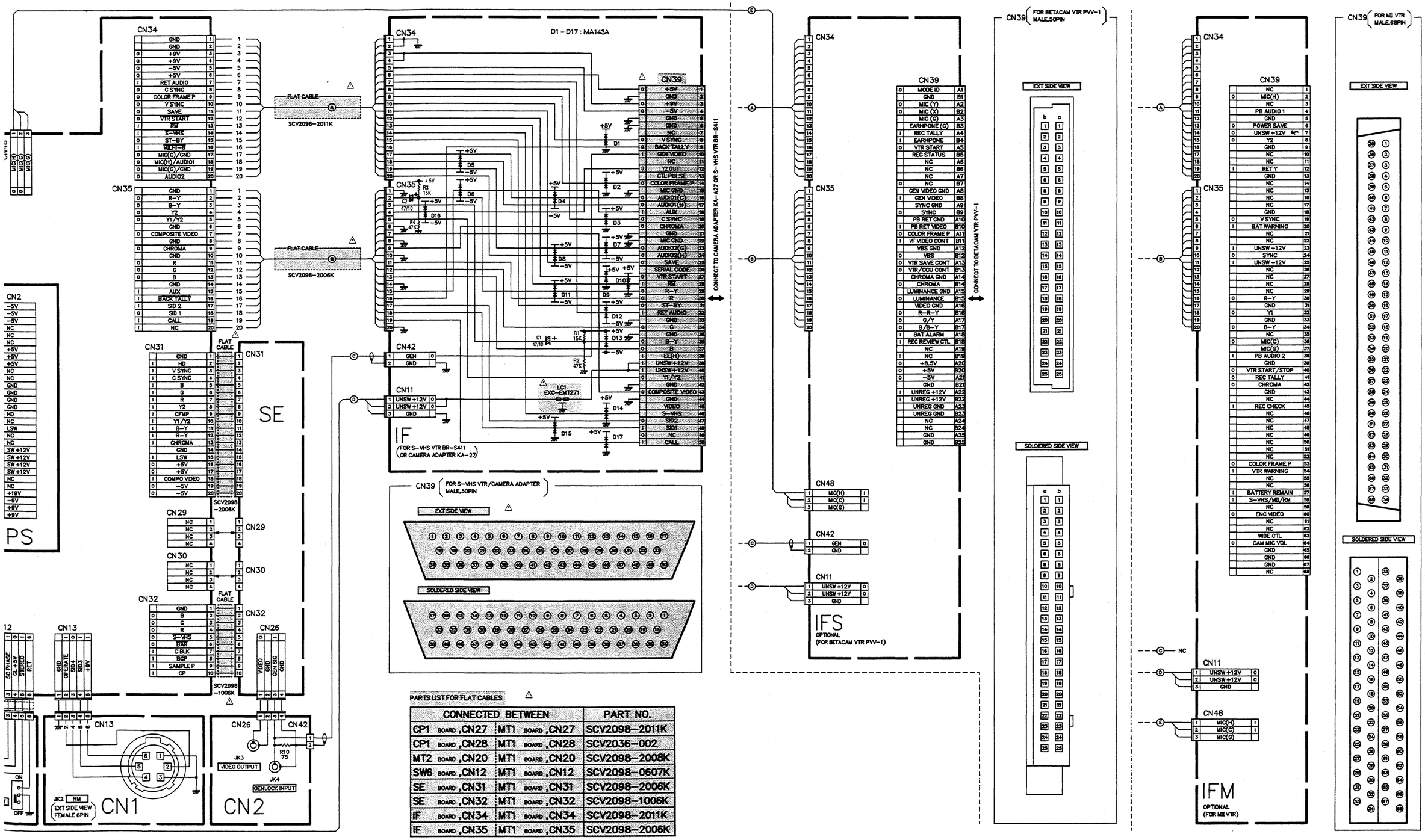


PARTS LIST FOR FLAT CABLES △

| CONNECTED BETWEEN | | PART NO. |
|---|---|---|
| CP1 BOARD ,CN27 | MT1 BOARD ,CN27 | SCV2098–2011K |
| CP1 BOARD ,CN28 | MT1 BOARD ,CN28 | SCV2036–002 |
| MT2 BOARD ,CN20 | MT1 BOARD ,CN20 | SCV2098–2008K |
| SW6 BOARD ,CN12 | MT1 BOARD ,CN12 | SCV2098–0607K |
| SE BOARD ,CN31 | MT1 BOARD ,CN31 | SCV2098–2006K |
| SE BOARD ,CN32 | MT1 BOARD ,CN32 | SCV2098–1006K |
| IF BOARD ,CN34 | MT1 BOARD ,CN34 | SCV2098–2011K |
| IF BOARD ,CN35 | MT1 BOARD ,CN35 | SCV2098–2006K |

6-26

## 6.26 SCHEMATIC DIAGRAM of ICs

### ■ AD847JR-T1 【ANALOG DIVICES】
(Op.Amp)

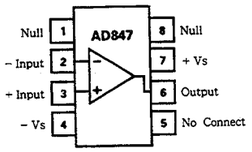


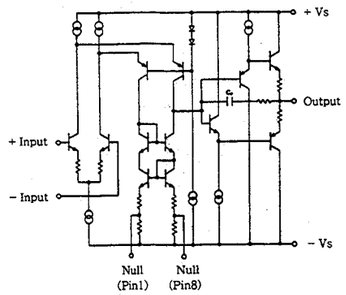


### ■ AN2020S 【MATSUSHITA】
(Dual Balanced Modulator)

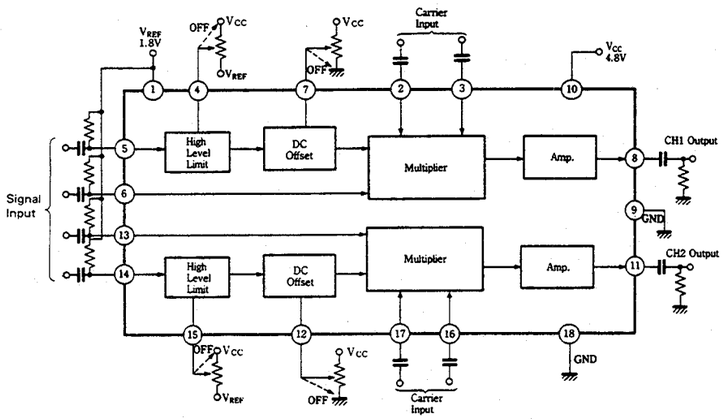


■ **Pin function**

| Pin No. | Pin Name | Pin No. | Pin Name |
|---|---|---|---|
| 1 | $V_{REF}$ (1.8V) | 10 | $V_{CC}$ (4.8V) |
| 2 | CH1 Carrier Input 1 | 11 | CH2 Output |
| 3 | CH1 Carrier Input 2 | 12 | CH2 DC Offset |
| 4 | CH1 High Level Limit | 13 | CH2 Signal Input 2 |
| 5 | CH1 Signal Input 1 | 14 | CH2 Signal Input 1 |
| 6 | CH1 Signal Input 2 | 15 | CH2 High Level Limit |
| 7 | CH1 DC Offset | 16 | CH2 Carrier Input 2 |
| 8 | CH1 Output | 17 | CH2 Carrier Input 1 |
| 9 | GND | 18 | GND |

### ■ AN6367S 【MATSUSHITA】
(Color Signal Processing Circuit)

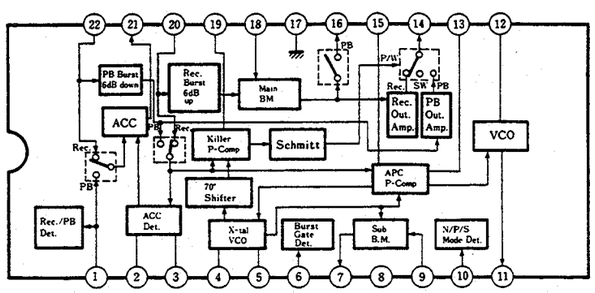


■ **Pin function**

| Pin No. | Pin Name | Pin No. | Pin Name |
|---|---|---|---|
| 1 | PB Chroma Input Rec. Changeover Input | 12 | VCO Frequency Adjustment |
| 2 | ACC Burst Det. | 13 | VCO Control Terminal |
| 3 | ACC Ref. Level | 14 | Chroma Output |
| 4 | X'tal Osc. Input | 15 | X'tal APC control Terminal |
| 5 | X'tal Osc. Output | 16 | PB Main BM Output |
| 6 | Burst Gate Pulse Input | 17 | GND |
| 7 | Sub BM Output | 18 | Main BM Input |
| 8 | $V_{CC}$ | 19 | Killer Control Terminal |
| 9 | Sub BM Input | 20 | ACC Input |
| 10 | NTSC/PAL/SECAM Mode Changeover Input | 21 | ACC Output |
| 11 | VCO Output | 23 | 3.58MHz Chroma Input |

### ■ JCS0001 【JVC】
(SSG)

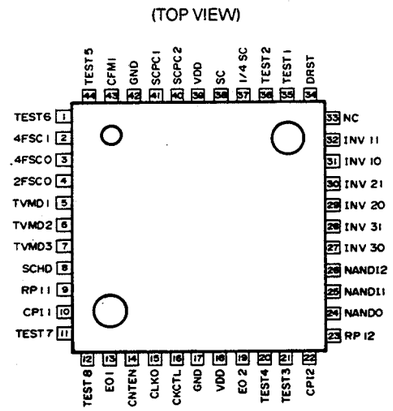


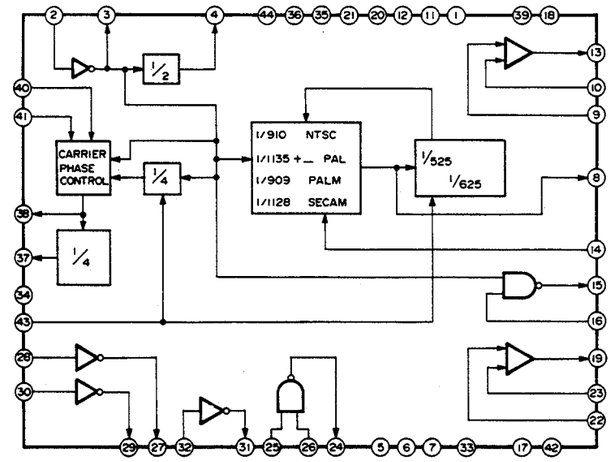


Timming chart of SC4

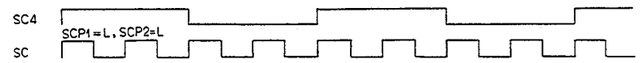


Syncro-reset mode (DRST = H)

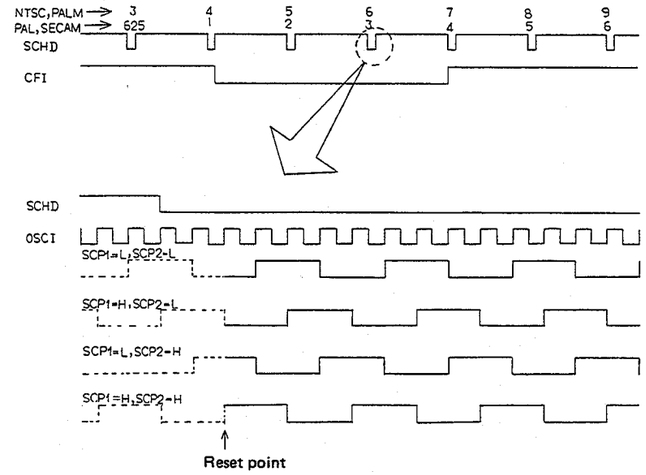


Direct-reset mode (DRST = L)

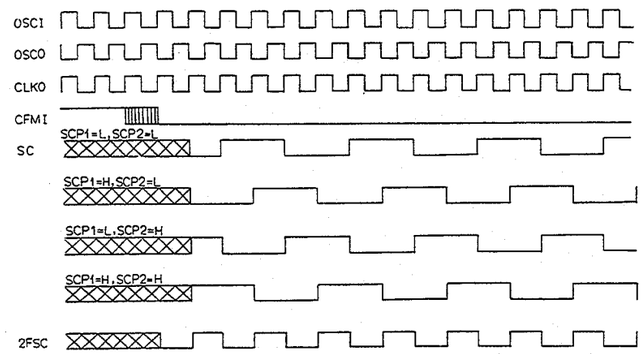

● **Pin function (JCS0001)**

| Pin No. | Symbol | I/O | Signal aspect | Description |
|---|---|---|---|---|
| 1 | TEST6 | O | – | Test terminal |
| 2 | 4FSCI | I | ⊓⊔ | Input terminal for internal oscillator (4 times frequency as high as subcarrier by crystal or LC oscillation) |
| 3 | 4FSCO | O | ⊓⊔ | Output terminal for internal oscillator (4 times frequency as high as subcarrier by crystal or LC oscillation) |
| 4 | 2FSCO | O | ⊓⊔ | For output of 2 times frequency as high as subcarrier |
| 5<br>6<br>7 | TVMD1<br>TVMD2<br>TVMD3 | I<br>I<br>I | –<br>–<br>– | To select TV system. The following combinations are prohibited.<br>NTSC / PAL / PALM / SECAM<br>TVMD1: L / L / L / H<br>TVMD2: L / H / L / L<br>TVMD3: L / L / H / H<br>(These terminals are pulled up by internal circuit.) |
| 8 | SCHD | O | ⊔⊓⊔ | H. sync pulse output obtained by countdown of 4 fsc clock<br>NTSC : 1/910 pulse of 4 fsc signal<br>PAL : 1/1135 divided pulse in normal. False fH signal of 1/1137 division in V. blanking<br>PALM : 1/909 divided pulse of 4 fsc signal<br>SECAM : 1/1128 divided pulse of 4 fsc signal |
| 9 | RPI1 | I | ⊓⊔ | Input terminal of phase comparator. Detects fall of input signal. (Terminal pulled up internally) |
| 10 | CPI1 | I | ⊓⊔ | Input terminal of phase comparator. Detects fall of input signal. (Terminal pulled up internally) |
| 11 | TEST7 | O | – | Test terminal |
| 12 | TEST8 | I | – | Test terminal (pulled up internally) |
| 13 | EO1 | O | – | Output terminal of phase comparator. Against RPI1, CPI1 is as follows:<br>Advanced : Low level<br>Delayed : High level<br>Same time : High impedance |
| 14 | CNTEN | I | – | To control operation start/stop of horizontal counter (This terminal is internally pulled down.)<br>H : To start counting<br>L : To stop counting |
| 15 | CLKO | O | ⊓⊔ | Output of 4 times frequency as high as subcarrier under control of CKCLT (pin 16). |
| 16 | CLCLT | I | – | To control CLKO output (This terminal is internally pulled up.).<br>L : Output of 4 times frequency as high as subcarrier<br>H : Fixed to High level |
| 17 | GND | – | – | GND |
| 18 | VDD | – | – | +5 V input |
| 19 | EO2 | O | – | Output terminal of phase comparator. Against RPI2, CPI2 is as follows:<br>Advanced : Low level<br>Delayed : High level<br>Same time : High impedance |
| 20 | TEST4 | I | – | Test terminal (pulled up internally) |
| 21 | TEST3 | I | – | Test terminal (pulled up internally) |
| 22 | CPI2 | I | ⊓⊔ | Input terminal of phase comparator. Detects fall of input. (Terminal pulled up internally) |
| 23 | RPI2 | I | ⊓⊔ | Input terminal of phase comparator. Detects fall of input. (Terminal pulled up internally) |
| 24 | NANDO | O | – | NAND gate output terminal |
| 25 | NANDI1 | I | – | NAND gate input terminal. (Must be fixed to Low or High level when unused.) |
| 26 | NANDI2 | I | – | NAND gate input terminal. (Must be fixed to Low or High level when unused.) |
| 27 | INV3O | O | – | Inverter gate pulse ouutput |
| 28 | INV3I | I | – | Inverter input |
| 29 | INV2O | O | – | Inverter output |
| 30 | INV2I | I | – | Inverter input |
| 31 | INV1O | O | – | Inverter output |
| 32 | INV1I | I | – | Inverter input |
| 33 | NC | – | – | Not connected |



| Pin No. | Symbol | I/O | Signal aspect | Description |
|---|---|---|---|---|
| 34 | DRST | I | – | To select reset manner of subcarrier inputted to CFMI terminal<br>L : Direct reset<br>H : Synchronous reset<br>(This terminal is pulled up by internal circuit.) |
| 35 | TEST1 | I | – | Test terminal (pulled up by internal circuit) |
| 36 | TEST2 | I | – | Test terminal (pulled up by internal circuit) |
| 37 | 1/4SC | O | ⊓⊔ | 1/4 counted down output of subcarrier |
| 38 | SC | O | ⊓⊔ | Subcarrier output. Reset method is selectable by DRST. |
| 39 | VDD | – | – | +5 V input |
| 40<br>41 | SCPC2<br>SCPC1 | I<br>I | –<br>– | To select phase of SC output (Terminals are pulled up by internal circuit.)<br>SCPC1: L / H / L / H<br>SCPC2: L / L / H / H<br>SC: 0° / 90° / 180° / 270° |
| 42 | GND | – | – | GND |
| 43 | CFMI | I | ⊔⊓ | Color frame pulse input (This terminal is pulled up by internal circuit.) |
| 44 | TEST5 | I | – | Test terminal (pulled up by internal circuit) |

■ **JCS0002 【JVC】 (SSG)**

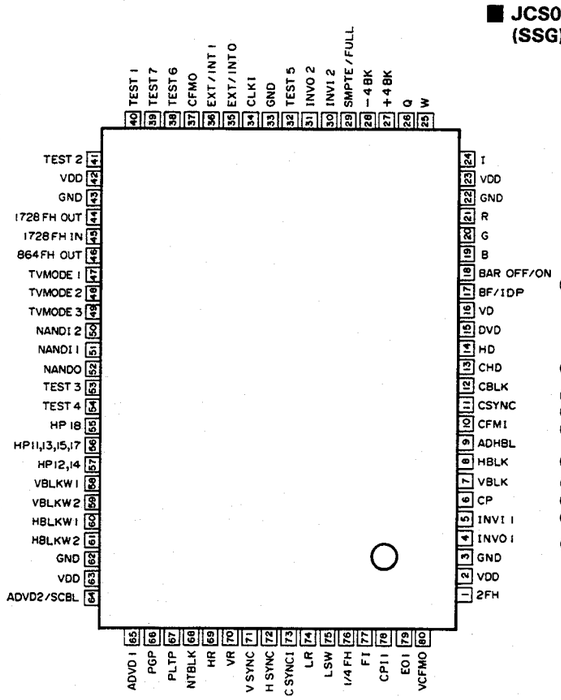


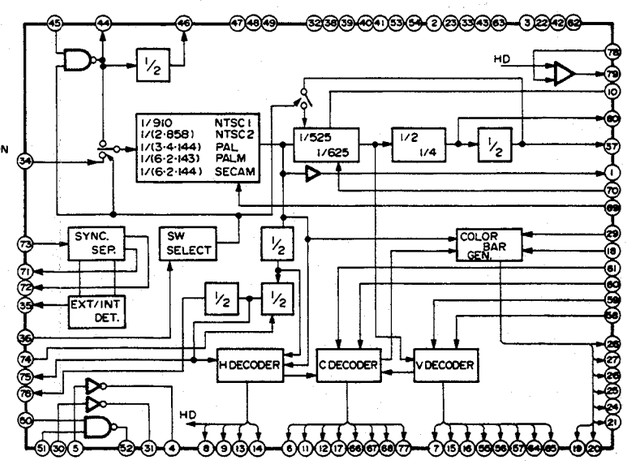

- **Pin function (JCS0002)**

| Pin No. | Symbol | I/O | Signal aspect | Description |
|---|---|---|---|---|
| 1 | 2FH | O | I I I | Double frequency horizontal sync signal output<br>NTSC 1: 31.468527 / NTSC 2: 31.468531 / PAL: 31.25 / PALM: 31.468531 / SECAM: 31.25 (kHz) |
| 2 | VDD | – | – | +5 V input |
| 3 | GND | – | – | GND |
| 4 | INVO1 | O | – | Inverter gate output |
| 5 | INVI1 | I | – | Inverter gate input |
| 6 | CP | O | ⊓⊔ | Clamp pulse output |
| 7 | VBLK | O | ⊓⊔ | Vertical blanking pulse output (pulse width is switchable by VBLKW1 and VBLKW2) |
| 8 | HBLK | O | ⊓⊔ | Horizontal blanking pulse output (pulse width is switchable by HBLKW1 and HBLKW2) |
| 9 | ADHBL | O | ⊓⊔ | Pulse faster in front porch fall than horizontal blanking pulse |
| 10 | CFMI | O | ⊓⊔ | Color frame pulse input for color frame control with external synchronization.<br>In NTSC1, enabled when EXT/INTI is High level. (This terminal is internally pulled up.) |
| 11 | CSYNC | O | ⊓⊔ | Composite sync signal output |
| 12 | CBLK | O | ⊓⊔ | Composite blanking pulse output |
| 13 | CHD | O | ⊓⊔ | Horizontal drive signal for control of camera's scan timing |
| 14 | HD | O | ⊓⊔ | Horizontal timing reference pulse synchronizing with beginning of every line |
| 15 | DVD | O | ⊓⊔ | Vertical timing pulse behing VD pulse. For control of camera's scan timing as well as for wake-up regulation of sawtooth waveform of vertical deflection circuit |
| 16 | VD | O | ⊓⊔ | Vertical timing reference pulse synchronized with beginning of every field |
| 17 | BF/IDP | O | ⊓⊔ | NTSC, PAL : Burst flag pulse<br>SECAM : For insertion of color distrimination signal for every line in vertical blanking period |
| 18 | BAR OFF/ON | I | – | For control of color bars signal output (G, B, I, Q, W, +4BK, –4BK)<br>Terminal logic: L — Output color bars control signal (R, G, B, I, Q, W, +4BK, –4BK)<br>Terminal logic: H — Always Low level<br>(This terminal is internally pulled up.) |
| 19<br>20<br>21 | B<br>G<br>R | O<br>O<br>O | ⊓⊔ | Color bars signal output |

| | BAR | SMPTE/FULL | B | G | R |
|---|---|---|---|---|---|
| NTSC 1 | H | X | L | L | L |
| NTSC 2 | L | X | ⊓⊔ | ⊓⊔ | ⊓⊔ |
| PAL | H | X | L | L | L |
| | L | X | ⊓⊔ | ⊓⊔ | ⊓⊔ |
| PALM | H | X | L | L | L |
| | L | X | ⊓⊔ | ⊓⊔ | ⊓⊔ |
| SECAM | H | X | L | L | L |
| | L | X | ⊓⊔ | ⊓⊔ | ⊓⊔ |

| Pin No. | Symbol | I/O | Signal aspect | Description |
|---|---|---|---|---|
| 22 | GND | – | – | GND |
| 23 | VDD | – | – | +5 V input |
| 24<br>25<br>26<br>27<br>28 | I<br>W<br>Q<br>+4BK<br>–4BK | O<br>O<br>O<br>O<br>O | ⊓⊔ | Color bars signal output |

| | BAR | SMPTE/FULL | I | W | Q | +4BK | –4BK |
|---|---|---|---|---|---|---|---|
| NTSC 1 | H | X | L | L | L | L | L |
| NTSC 2 | L | H | ⊓⊔ | ⊓⊔ (correspond. to 75%) | ⊓⊔ | ⊓⊔ | ⊓⊔ |
| | L | L | L | L | L | L | L |
| PAL | H | X | L | L | L | L | L |
| | L | H | ⊓⊔ | ⊓⊔ (correspond. to 75%) | ⊓⊔ | ⊓⊔ | ⊓⊔ |
| | L | L | L | ⊓⊔ (correspond.to 100%) | L | L | L |
| PALM | H | X | L | L | L | L | L |
| | L | H | ⊓⊔ | ⊓⊔ (correspond. to 75%) | ⊓⊔ | ⊓⊔ | ⊓⊔ |
| | L | L | L | ⊓⊔ (correspond.to 100%) | L | L | L |
| SECAM | H | X | L | L | L | L | L |
| | L | H | ⊓⊔ | ⊓⊔ (correspond. to 75%) | ⊓⊔ | ⊓⊔ | ⊓⊔ |
| | L | L | L | L | L | L | L |



| Pin No. | Symbol | I/O | Signal aspect | Description |
|---|---|---|---|---|
| 29 | SMPTE/ FULL | I | – | SMPTE/FULL FIELD mode switching pulse input for color bars signal<br>L : FULL FIELD mode<br>H : SMPTE mode<br>(Effective only when BAR OFF/ON is Low level. This terminal is internally pulled up.) |
| 30 | INVI2 | I | – | Inverter gate input terminal |
| 31 | INVO2 | O | – | Inverter gate output terminal |
| 32 | TEST5 | I | – | Test terminal. (This terminal is pulled up by internal circuit.) |
| 33 | GND | – | – | GND |
| 34 | CLKI | I | – | 4 fsc clock pulse input |

| TVMODE1 | TVMODE2 | TVMODE3 | EXT/INTI | CLKI |
|---|---|---|---|---|
| L | L | L | L | Enabled |
| In other modes than the above | | | | Prohibited |

| Pin No. | Symbol | I/O | Signal aspect | Description |
|---|---|---|---|---|
| 35 | EXT/ INTO | O | – | CSYNCI input detection signal output<br>H : CSYNCI input present<br>(Detects V. sync signal from CSYNCI signal and detects more than 200 H. sync signals from 1 V. sync period.)<br>L : CSYNCI input absent<br>(Detects no H. sync signal for 8 fields.) |
| 36 | EXT/ INTI | I | – | Main clock selector terminal (pulled down internally)<br>In NTSC1 – H : CLKI (34) enabled L : 1728 FHIN (45) enabled<br>In other systems – 1728 FHIN (45) enabled |
| 37 | CFMO | O | ⊓⊔ | Color frame start pulse output<br>NTSC1, NTSC2 : 4-field period<br>PAL, PALM, SECAM : 8-field period |
| 38 | TEST6 | I | – | Test terminal (pulled up by internal circuit) |
| 39 | TEST7 | O | – | Test terminal |
| 40 | TEST1 | I | – | Test terminal (pulled up by internal circuit) |
| 41 | TEST2 | I | – | Test terminal (pulled up by internal circuit) |
| 42 | VDD | – | – | +5 V |
| 43 | GND | – | – | GND |
| 44 | 1728FH OUT | O | ⊓⊔ | Output terminal for internal oscillator |
| 45 | 1728FH IN | I | ⊓⊔ | Input terminal for internal oscillator |
| 46 | 864FH OUT | O | ⊓⊔ | Half divided output of internal oscillator |
| 47 | TV MODE1 | I | – | TV system selector input terminal (pulled up by internal circuit) |
| 48 | TV MODE2 | I | – | |
| 49 | TV MODE3 | I | – | |

| | NTSC1 1820 fh | NTSC2 1716 fh | PAL 1728 fh | PALM 1716 fh | SECAM 1728 fh |
|---|---|---|---|---|---|
| TV MODE1 | L | H | L | L | H |
| TV MODE2 | L | L | H | L | L |
| TV MODE3 | L | L | L | H | H |

| Pin No. | Symbol | I/O | Signal aspect | Description |
|---|---|---|---|---|
| 50 | NANDI2 | I | – | NAND gate input terminal |
| 51 | NANDI1 | I | – | NAND gate input terminal |
| 52 | NANDO | O | – | NAND gate output terminal |
| 53 | TEST3 | I | – | Test terminal (pulled up by internal circuit) |
| 54 | TEST4 | I | – | Test terminal (pulled up by internal circuit) |
| 55 | HP18 | O | ⊓⊔ | To output pulse active at 18th H |
| 56 | HP11, 13 15, 17 | O | ⊓⊔ | To output pulses respectively active at 11th, 13th, 15th and 17th H |
| 57 | HP12, 14 | O | ⊓⊔ | To output pulses respectively active at 12H and 14th H |

| Pin No. | Symbol | I/O | Signal aspect | Description |
|---|---|---|---|---|
| 58<br>59 | VBLKW1<br>VBLKW2 | I<br>I | –<br>– | To switch V. blanking period of CBLK and VBLK (Terminals are internally pulled up.)<br>VBLKW1: L / H / L / H<br>VBLKW2: L / L / H / H<br>NTSC1: 21H / 20H / 19H / 18H<br>NTSC2: 21H / 20H / 19H / 18H<br>PAL: 26H / 25H / 24H / 23H<br>PALM: 21H / 20H / 19H / 18H<br>SECAM: 26H / 25H / 24H / 23H |
| 60<br>61 | HBLKW1<br>HBLKW2 | I<br>I | –<br>– | To switch H. blanking period of CBLK, HBLK and ADHBL (Terminals are internally pulled up.)<br>HBLKW1: L / H / L / H<br>HBLKW2: L / L / H / H<br>NTSC1: 157T / 156T / 154T / 152T<br>NTSC2: 148T / 147T / 146T / 144T<br>PAL: 162T / 159T / 156T / 153T<br>PALM: 148T / 147T / 146T / 144T<br>SECAM: 162T / 159T / 156T / 153T |
| 62 | GND | – | – | GND |
| 63 | VDD | – | – | +5 V input |
| 64 | ADVD2/ SCBL | O | ⊓⊔ | Output pulse 8 H ahead of VD (Subcarrier blanking pulse in SECAM system) |
| 65 | ADVD1 | O | ⊓⊔ | Output pulse 1H ahead of VD |
| 66 | PGP | O | ⊓⊔ | Pilot gate pulse. To correct signal attenuation owing to delay line by coinciding signal levels of 1H delayed signal and original signal with each other. |
| 67 | PLTP | O | ⊓⊔ | Pilot pulse output. To correct signal attenuation owing to delay line by coinciding signal levels of 1H delayed signal and the original with each other. |
| 68 | NTBLK | O | ⊓⊔ | Composite blanking pulse output for pickup tube. (This output is narrower in pulse width and delayed both in horizontal and vertical timing than normal composite blanking pulse.) |
| 69 | HR | I | ⊓⊔ | To preset horizontal component 1T before the fall of HD. Although jitters for less than for 140 ns are absorbed, operations against continuous input are not assured.<br>(This terminal is internally pulled up.) |
| 70 | VR | I | ⊓⊔ | External V. sync signal input by slip system. (In NTSC1, EXT/INTI is enabled with High level.) Input in V. sync period resets the hardware, otherwise it stops internal counter for pulse width. (Input system is Schmitt trigger circuit and terminal is pulled up by internal circuit.) |
| 71 | VSYNC | O | ⊓⊔ | Output of V. sync signal which is synchronously separated from composite sync signal inputted through CSYNCI. This output includes no equalizing pulse. |
| 72 | HSYNC | O | ⊓⊔ | Output of H. sync signal which is synchronously separated from composite sync signal inputted through CSYNCI. This output includes no equalizing pulse. |
| 73 | CSYNCI | I | ⊓⊔ | Composite sync signal input for sync separation.<br>(Input system is Schmitt trigger circuit and terminal is pulled up by internal circuit.) |
| 74 | LR | I | ⊓⊔ | For asynchronous preset of LSW with Low input level. (In NTSC1, it is enabled when EXT/INTI is High.) Vertical BF timing is available, however, it is not synchronized unless it is well-timed horizontally. (Input system is Schmitt trigger circuit and terminal is pulled up internally.) |
| 75 | LSW | O | ⊓⊔ | Half divided fh output. (Used as line discrimination signal in PAL and PALM systems) |
| 76 | 1/4FH | O | ⊓⊔ | Half divided LSW output. (Corresponding to 1/2 offset in PAL) |
| 77 | FI | O | – | Field index output<br>L : Field in which both falls of HD and VD pulses coincide with.<br>H : Field in which falls of HD and VD pulses come off 0.5 H each other. |
| 78 | CPI1 | I | ⊓⊔ | Input terminal for digital phase comparator. Falls of input are detected. (This terminal is pulled up by internal circuit.) |
| 79 | EO1 | O | – | Input terminal for digital phase comparator.<br>In comparison with front porch of internal HD pulse, CPI1 input is as follows:<br>Advanced : Low<br>Delayed : High<br>Same time : High impedance |
| 80 | VCFMO | O | | Color frame pulse output exclusive for VTR.<br>Period is 2 fields in NTSC1, NTSC2 and PALM while 4 fields in PAL and SECAM. |



## NTSC H-TIMMING

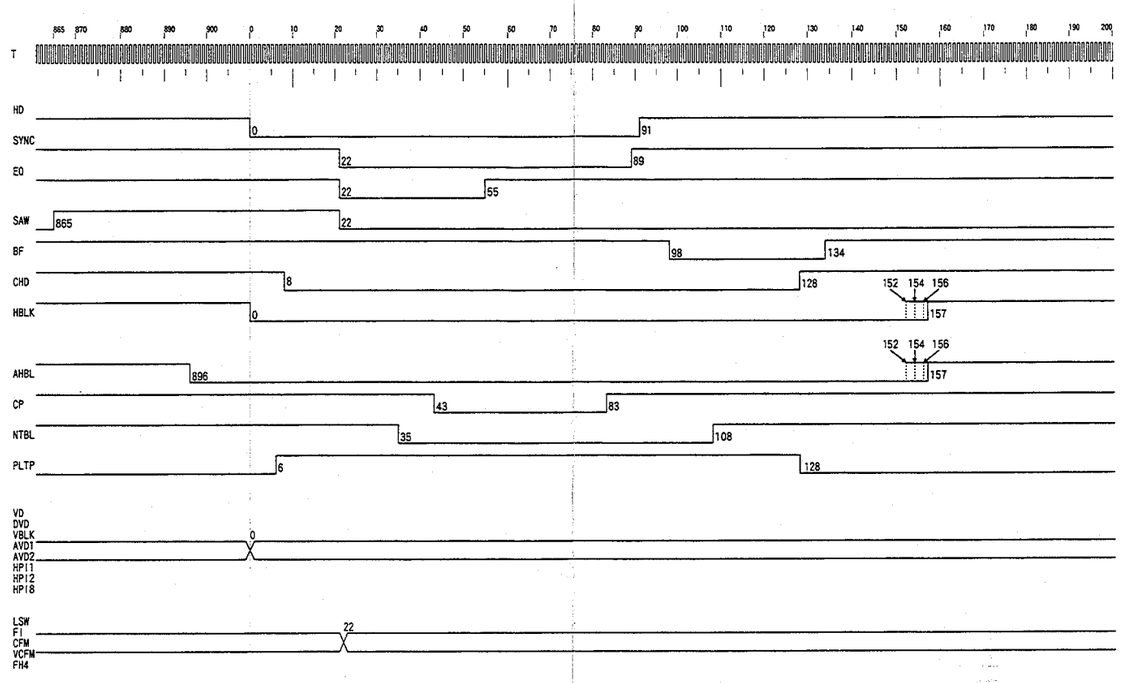


## PAL H-TIMMING

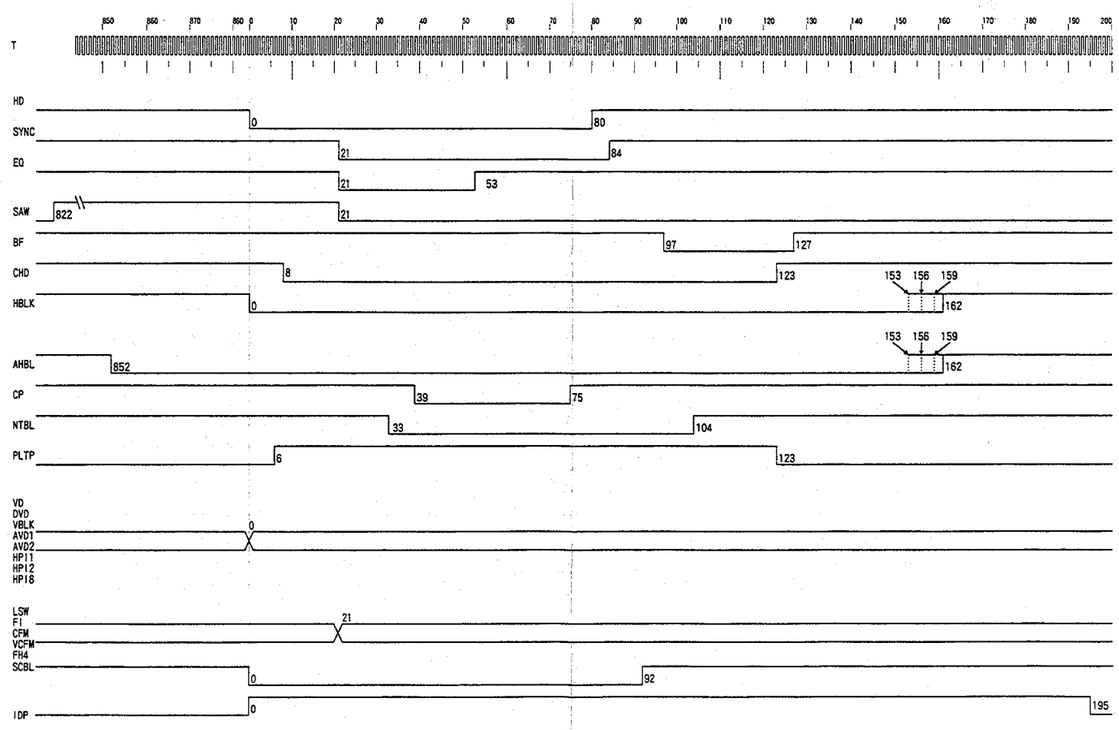

NTSC V-TIMMING (1st field)

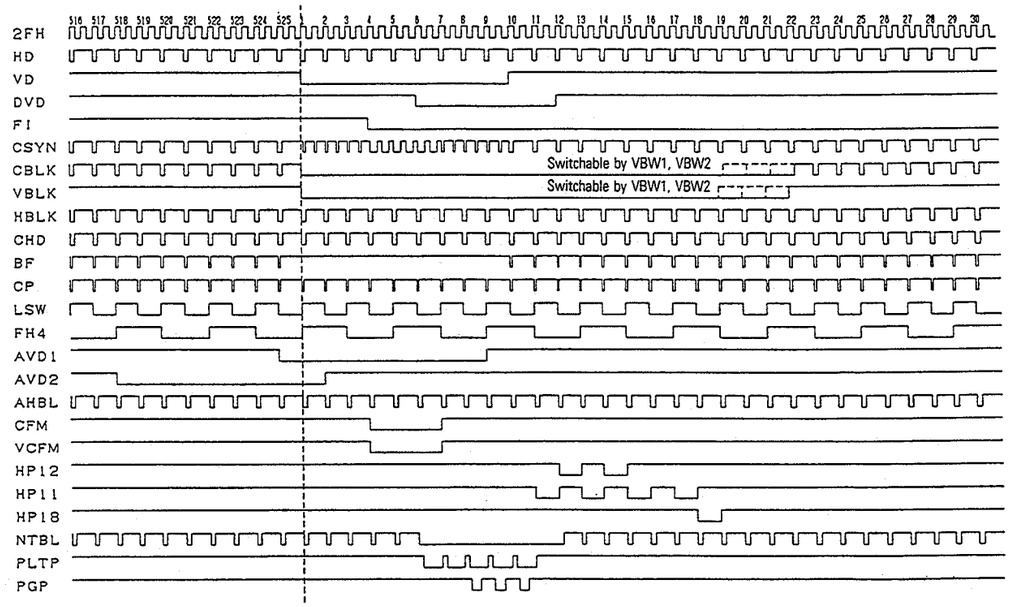


PAL V-TIMMING (1, 3, 5, 7 field)

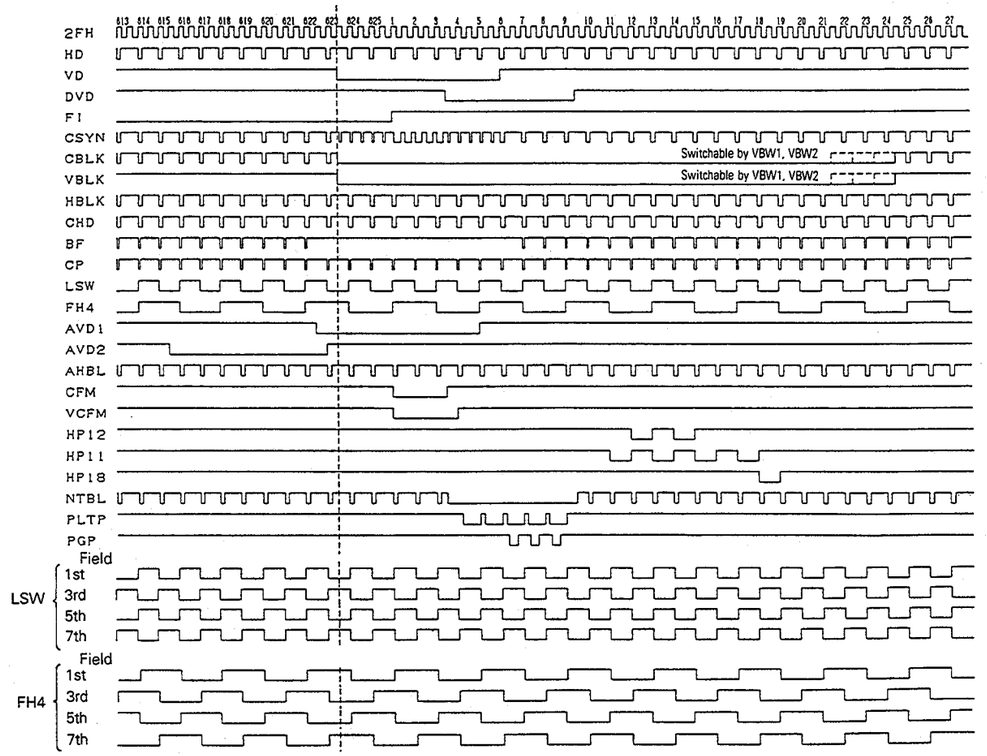


NTSC V-TIMMING (2nd field)

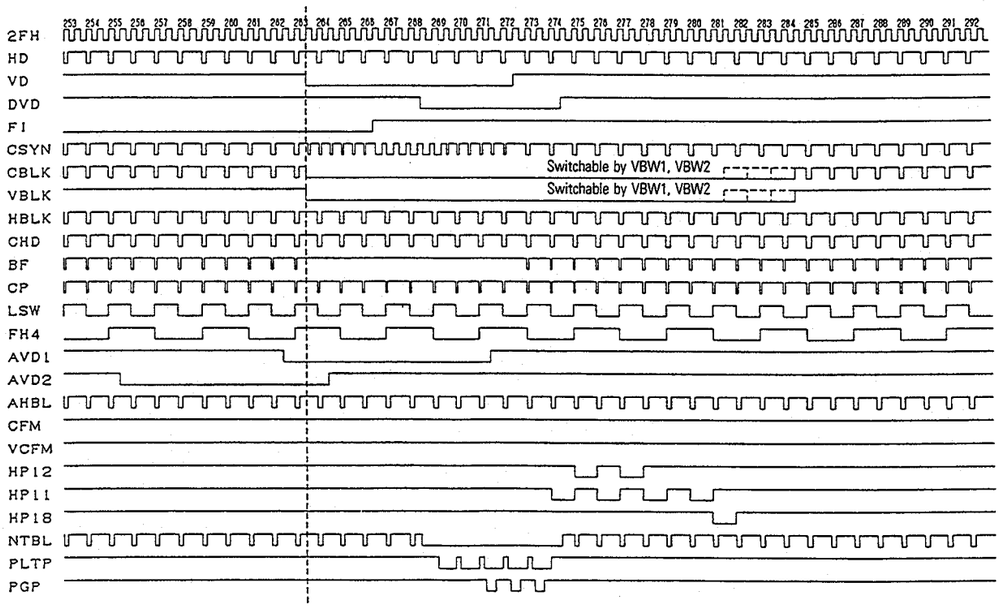


PAL V-TIMMING (2, 4, 6, 8 field)

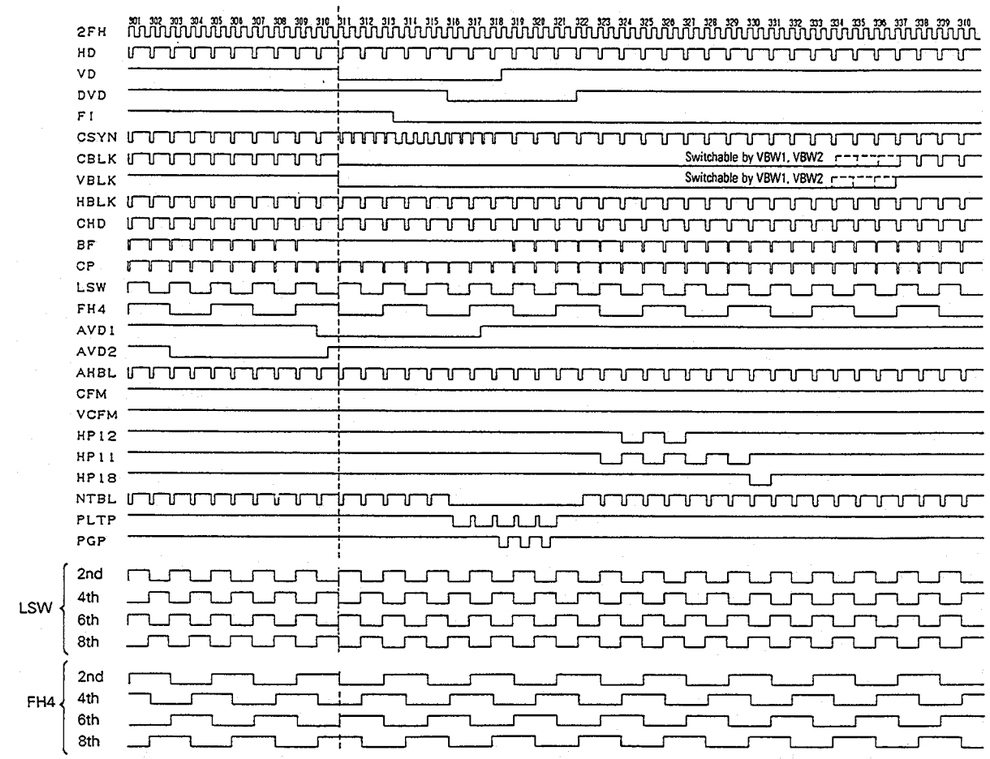




6-30

## ■ JCS0005 【JVC】

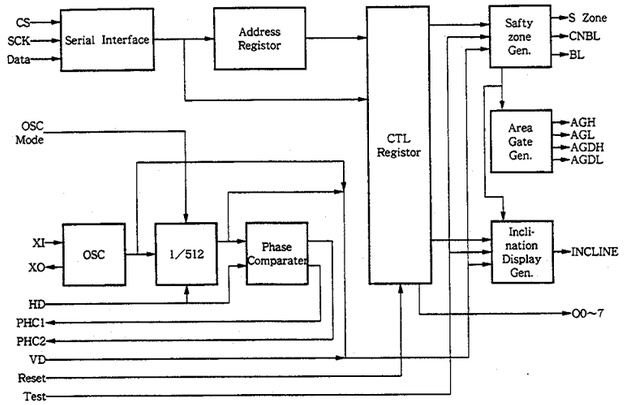


## ■ LH5116NA-10 【SHARP】
(C-Mos 16K Static RAM)

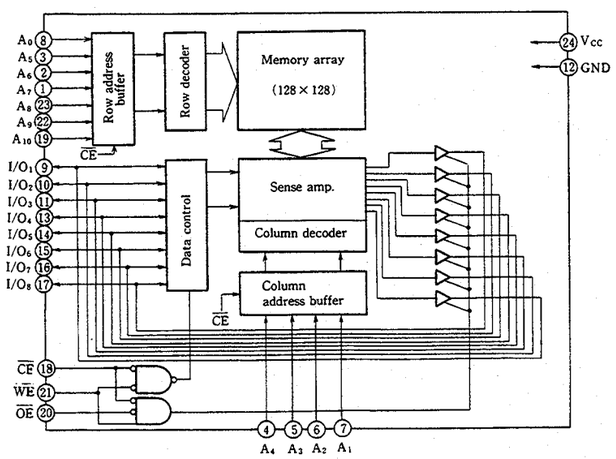


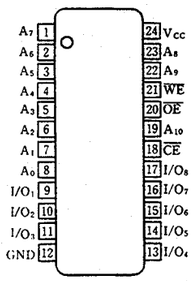


Top View

| Symbol | Pin Name |
|---|---|
| $A_0 \sim A_{10}$ | Address Input |
| $\overline{CE}$ | Chip Enable Input |
| $\overline{OE}$ | Output Enable Input |
| $\overline{WE}$ | Write Enable Input |
| $I/O_1 \sim I/O_8$ | Date Input/Output |
| $V_{CC}$ | Power Supply |
| GND | Grounding |

● **Pin function of JCS0005**

All input terminals are internally pulled up.

| Pin No. | Symbol | I/O | Function |
|---|---|---|---|
| 1 | CS | I | Chip select terminal of serial input/output. |
| 3 | SCK | I | Write-in clock for serial input/output. Data is read at rise of SCK. |
| 5 | DATA | I | Serial data input. To start with LSB. |
| 6 | VSS | — | GND (power) |
| 7 | OSC MODE | I | H : To use internal oscillator. L : To use external clock. |
| 8 | PHC1 | O | Phase comparison output of internal PLL.<br>Output level is low when clock is ahead of HD in the phase while it is high when clock is behind HD in the phase. In other period clock has high impedance. |
| 9 | PHC2 | O | Phase comparison output of internal PLL.<br>Output level is high when clock is ahead of HD in the phase while it is low when clock is behind HD in the phase. In other period clock has high impedance. |
| 11 | XI | O | Oscillator input. When external clock is used, it is input to this terminal. External clock must be synchronous with HD. A feedback resistor is built in between XI and XO. |
| 12 | XO | O | Oscillator output. |
| 14 | _06 | O | General output 6 |
| 16 | _VD | I | Vertical sync. signal input (negative) |
| 17 | _HD | I | Horizontal sync. signal input (negative) |
| 18 | VSS | — | GND (power) |
| 19 | VDD | — | +5 V power supply |
| 20 | _RESET | I | Reset input. Low level input (for more than 1 μsec at least) at power on inhibits output of AGDL, AGDH, SZONE, INCLINE and turns levels of general outputs_O0 to _O6 to low. |
| 21 | _TEST | I | To be used for IC inspection. For use, turn to open or connect with VDD. |
| 22 | SZONE | O | Safety zone indication output |
| 23 | INCLINE | O | Inclination angle indication output |
| 24 | _CNBL | O | Blanking output for cinema mode |
| 25<br>27 | AGDL<br>AGDH | O<br>O | To output area gate in combination 2 bits of AGDL and AGDH. Output can be turned on/off by setting of internal register.<br>Area gate 0 period (blanking period): AGDL O, AGDH O<br>Area gate 1 period: AGDL O, AGDH I<br>Area gate 2 period: AGDL I, AGDH O<br>Area gate 3 period: AGDL I, AGDH I |
| 30 | _O0 | O | General output 0 |
| 31 | VSS | — | GND |
| 33 | _O1 | O | General output 1 |
| 35 | _O2 | O | General output 2 |
| 37 | _O3 | O | General output 3 |
| 39 | _O4 | O | General output 4 |
| 42 | VSS | — | GND (power) |
| 43 | VDD | — | +5 V power supply |
| 44 | _O5 | O | General output 5 |
| 45 | AG4 | O | H output in area gate 4 period, L output in other period. Blanking is applied by internal BL signal. |
| 46<br>47 | AGL<br>AGH | O<br>O | To output area gate in combination of 2 bits of AGL and AGH.<br>Area gate 0 period (blanking period): AGL O, AGH O<br>Area gate 1 period: AGL O, AGH I<br>Area gate 2 period: AGL I, AGH O<br>Area gate 3 period: AGL I, AGH I |
| 48 | BL | O | H output in blanking period, L output in other period. |

## ■ LM2904M 【TEXAS】
(Dual Op.Amp)

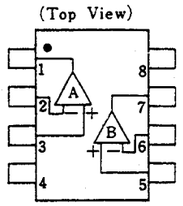


Pin
1. A OUTPUT
2. A−INPUT
3. A+INPUT
4. V⁻
5. B+INPUT
6. B−INPUT
7. B OUTPUT
8. V⁺

## ■ MB88342PF 【FUJITSU】
(D/A Converter)

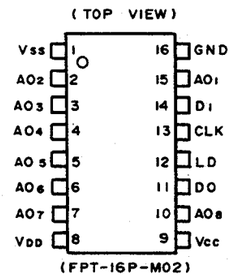


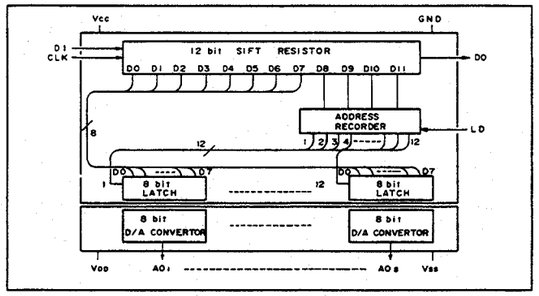

## ■ MB89012-109 【FUJITSU】
(TV Display Controler)

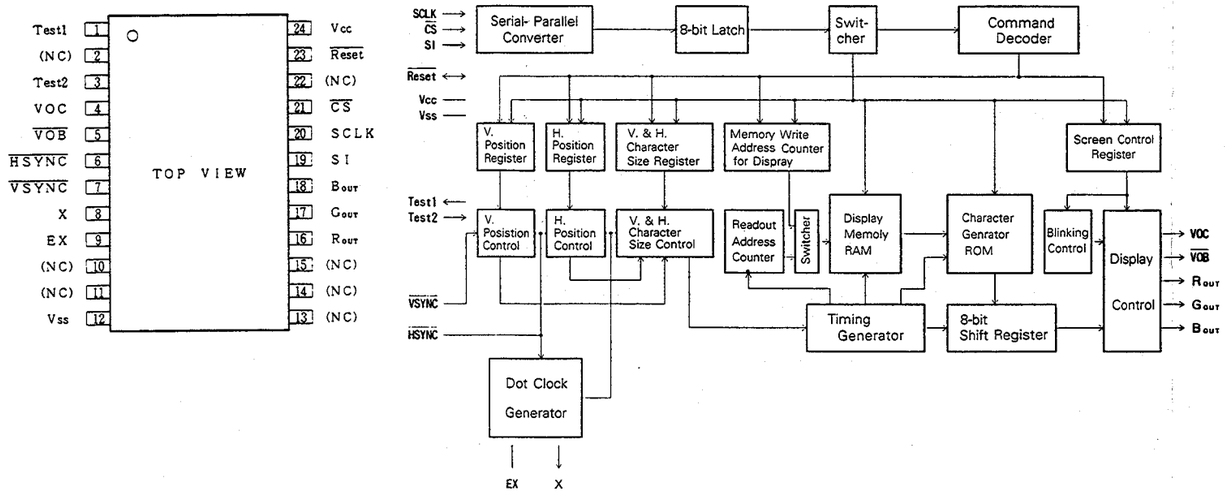


## ■ MB89T715PF 【FUJUTSU】
(8-Bit MicroComputer)

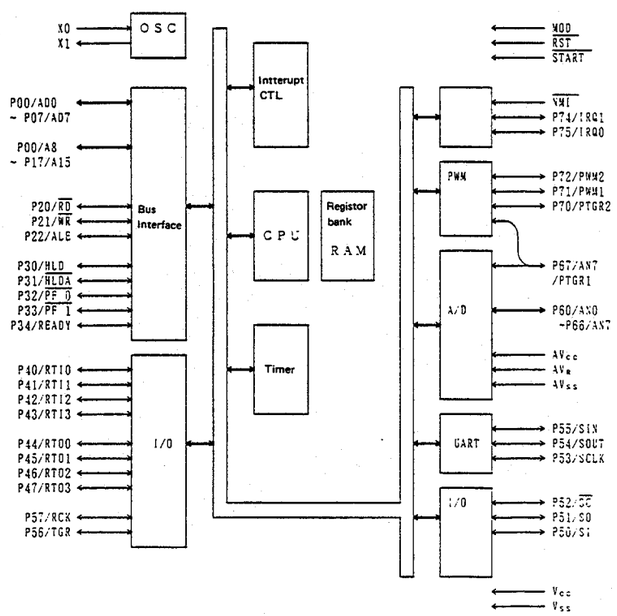


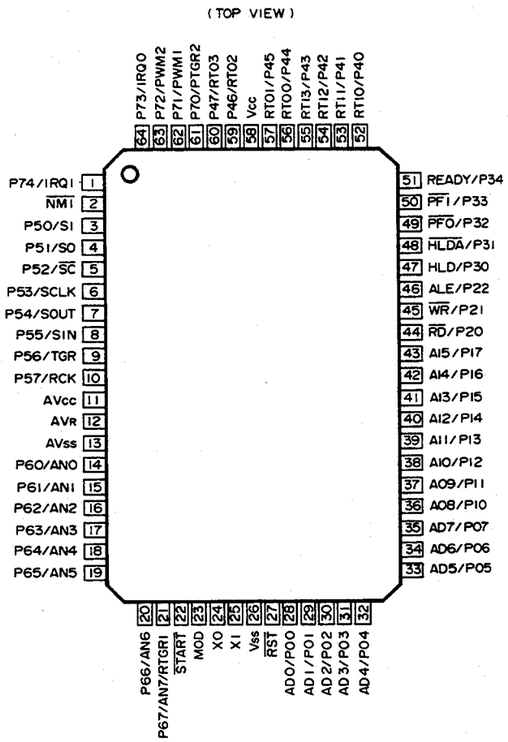




## ■ MB89251APF 【FUJITSU】
(Serial Data Transmiter/Reciever)

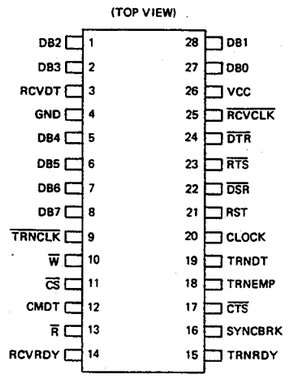


### ● Block diagram (MB89251A)

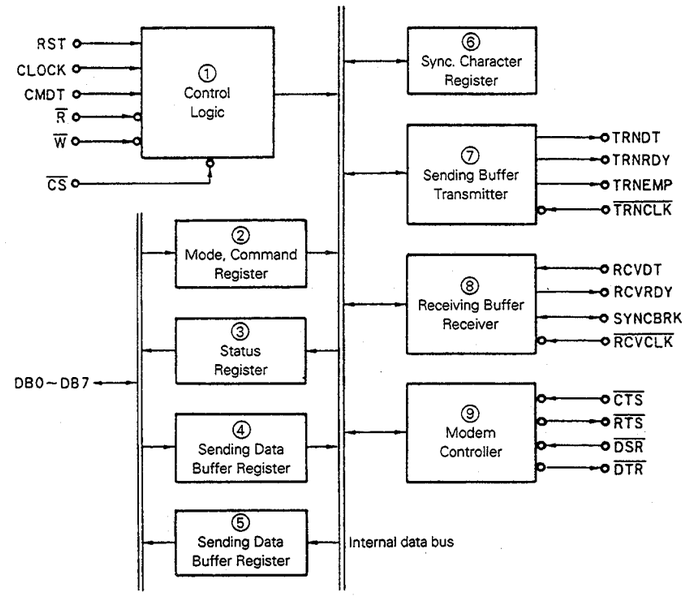


### ● Pin function of MB89251A (General purpose communication controller)

| Pin No. | Symbol | Pin Name | I/O | Function |
|---|---|---|---|---|
| 1, 2, 5–8, 27, 28 | DB0–DB7 | Two-way Data Bus | I/O | Three-state two-way 8 bits data bus used for transmission of sending/ receiving signal, mode parameter, operation command, status information, etc. |
| 3 | RCVDT | Receiving Data | I | Serial data is received through this terminal. Received signal data is converted into parallel data, which undergoes parity check and is compiled to be transferred to MPU as receiving data. |
| 4 | GND | Ground | — | Grounding |
| 9 | $\overline{\text{TRNCLK}}$ | Transmission Clock | I | Transfer rate of sending data is determined by this signal. In synchronous mode, frequency of this transmission clock is set to the same as baud rate.<br>In start-stop mode, frequency of transmission clock is set to ×1, ×16 or ×64 as high as baud rate of sending data in accordance with setting of mode parameter. Sending data is shifted out at trailing edge of transmission clock. |
| 10 | $\overline{\text{W}}$ | Write Enable | I | For inputting sending data, mode parameter, operation command through data bus, write enable pulse ("L" level) is input through this terminal. |
| 11 | $\overline{\text{CS}}$ | Device Select | I | "L" level signal input through this terminal is transmitted to MB89251A via data bus to shift its internal register to "read" or "write" mode. This input signal is used together with $\overline{\text{W}}$ or $\overline{\text{R}}$ signal, which distinguishes between "read" and "write". |

| Pin No. | Symbol | Pin Name | I/O | Function |
|---|---|---|---|---|
| 12 | CMDT | Command Data | I | This terminal discriminates between sending/receiving signal and mode parameter, operation command and status information on data bus. When signal on data bus is sending/receiving signal, its level is "L" while level is "H" for some of the others on data bus. This signal is also used together with $\overline{W}$ or $\overline{R}$ signal. |
| 13 | R | Read Enable | I | For reading receiving data or status information via data bus, "L" level read enable pulse is input through this terminal. |
| 14 | RCVRDY | Reception Ready | O | In the state that serial receiving data is converted to parallel data to be read by MPU this terminal has "H" level, while level is reset to "L" when MPU reads the data.<br>When RCVE bit of operation command is set to "0", RCVRDY signal is masked. |
| 15 | TRNRDY | Transmission Ready | O | Maskable signal to get MPU informed that sending data is transmittable to buffer register. When sending data is transferred from MPU, this is automatically reset by $\overline{W}$ signal.<br>Bit 1 of status register indicates the state of sending data reception ready, while this terminal addingly indicates the state of sending data transmission ready. |
| 16 | SYNC<br><br>BRK | Sync. Character Detection<br><br>Break Code Detection | I<br><br>O | This terminal is used for SYNC (synchronous character detection) signal in synchronous mode while it is used for BRK (break code detection) signal in start-stop mode.<br>When used for SYNC signal in synchronous mode, input or output function is determined by mode parameter's sync. detection system. When internal sync. detection mode is set by mode parameter, this functions as output terminal. With reception of sync. character for 1 or 2 data, its level becomes "H", which will be reset as MPU reads status information. On the other hand, when external sync. detection mode is set by mode parameter, it functions as input terminal. When "H" level signal is input to this signal as $\overline{RCVCLK}$ terminal has "H" level input in enter hunt mode, data sampled at leading edge of $\overline{RCVCLK}$ signal is used as start data of receiving data. Duration of "H" level input is more than one cycle of $\overline{RCVCLK}$ input. In external sync. detection mode, detection of sync. code is not operated.<br>When used for BRK signal in start-stop mode, this functions as output terminal, whose level becomes "H" with reception of "L" character (all start bit, data bit, parity bit and stop bit are "L") after framing error (stop bit is "L"). "H" level in the above condition will be cancelled when receiving data has "H" level or it is reset. |
| 17 | $\overline{CTS}$ | Clear to Send | I | In the state that TRNEN bit of operation command is set to "1", transmission from TRNDT terminal is possible with "L" level signal output to this terminal. If this terminal has "H" level or TRNEN bit is set to "0" in transmission operation, all data stored previously are sent out and then transmission is stopped. If this undergoes in course of the first sync. character sending in sync. mode (duplex sync. character mode), the second sync. character is also sent out. |



| Pin No. | Symbol | Pin Name | I/O | Function |
|---|---|---|---|---|
| 18 | TRNEMP | Transmission Buffer Empty | O | This terminal outputs "L" level when there is no data to be transmitted, and it is reset with reception of 1 character of sending data.<br>If this signal is "H" level in sync. mode, it indicates that automatically inserted sync. character is shifted out because of no transfer of sending data.<br>This signal also applies to indication of line inversion timing for half-duplex operation. |
| 19 | TRNDT | Transmission Data | O | This terminal converts parallel data transferred from MPU to serial data while generating necessary bits for it such as start bit to be added, and outputs bit added data as sending data.<br>After reset or when TRNEN bit is set to "0" or $\overline{CTS}$ input level is "H", this comes into marking state.<br>When there is no data to be sent, it outputs sync. character in sync. mode or enters marking state in start-stop mode. |
| 20 | CLOCK | Clock | I | For input of timing reference clock signal for internal operation. Clock signal is independent from other external signals, however, in sync. mode and start-stop mode (×1) its frequency becomes more than ×30 as high as those of transmission clock and reception clock, while it is more than ×4.5 as high as them in other start-stop modes (×16 and ×64). |
| 21 | RST | Reset | I | For input of reset pulse signal to initialize MB89251A. When "H" level pulse whose pulse width is 6 tck or more is input, MB89251A is set to the mode parameter setting standby state that is the initlal mode.<br>Even in a period of reset pulse input, CLOCK terminal requires clock input. |
| 22 | $\overline{DSR}$ | Data Set Ready | I | Used for modem control with connection to modem's Data Set Ready signal. State of this terminal is indicated by bit 7 of status register. |
| 23 | $\overline{RTS}$ | Send Request | O | Used for modem control with connection to modem's Request To Send signal. When bit 5 of operation command is set to "1" by programming, this outputs "L" level signal. |
| 24 | $\overline{DTR}$ | Data Terminal Ready | O | Used for modem control with connection to modem's Data Terminal Ready signal or used as Rate Select signal for modem control. When bit 1 of operation command is set to "1" by programming, this outputs "L" level signal. |
| 25 | $\overline{RCVCLK}$ | Receiving Clock | I | Transfer rate of receiving data is determined by this signal.<br>In sync. mode frequency of this receiving clock is set to the same as baud rate of receiving data.<br>In start-stop mode, frequency of receiving clock is set to ×1, ×16 or ×64 as high as baud rate of receiving data.<br>Receiving data is sampled at leading edge of this receiving clock. In the ×1 start-stop mode, external synchronization between $\overline{RCVCLK}$ and RCVDT is required differently from other start-stop modes (×16 and ×64). |
| 26 | Vcc | Power Supply | — | +5 V power supply |

**Note:** I/O : Input/Output
I : Input
O : Output

## ■ MC-8088A 【NEC】
**(Coreated Double Sampling)**

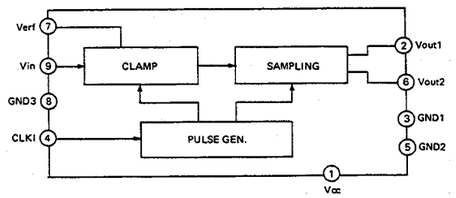


## ■ MC14052BF 【MOTOROLA】
**(Dual 4 Channel Analog Multiplexers/ Demultiplexers)**

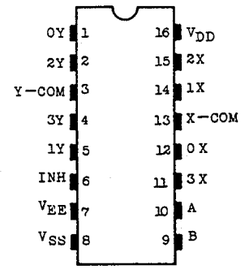


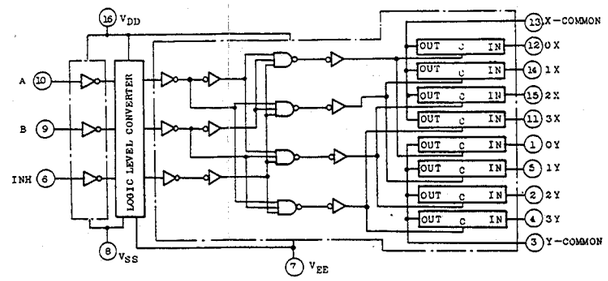


## ■ MC14053BF 【MOTOROLA】
**(Triple 2 Channel Analog Multiplexers/ Demultiplexers)**

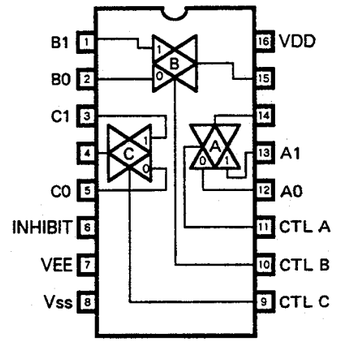


CONTROL VOLTAGE : $V_{SS} \leq (V_{CTL\ A}, V_{CTL\ B}, V_{CTL\ C}) \leq V_{DD}$
INPUT VOLTAGE : $V_{EE} \leq (V_{A1}, V_{A0}, V_{B1}, V_{B0}, V_{C1}, V_{C0}) \leq V_{DD}$

## ■ MC14094BF 【MOTOROLA】
**(8 Stage Bus Compatible Shift/Store Register)**

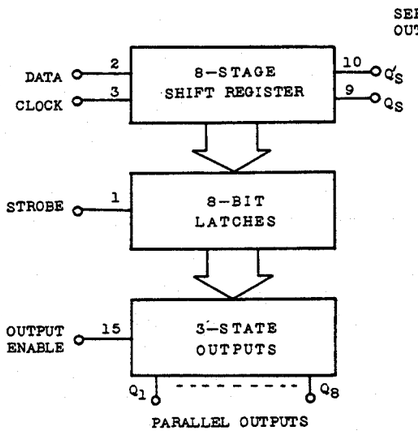


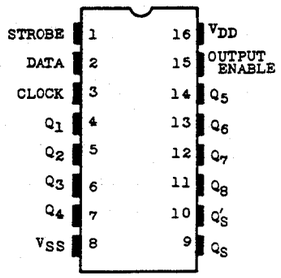


(TOP VIEW)

| CL | OE | ST | D | PO | | SO | |
|---|---|---|---|---|---|---|---|
| | | | | $Q_1$ | $Q_n$ | $Q_S$ | $Q'_S$ |
| ↑ | H | H | L | L | $Q_n-1$ | $Q_7$ | NC |
| ↑ | H | H | H | H | $Q_n-1$ | $Q_7$ | NC |
| ↑ | H | L | * | NC | NC | $Q_7$ | NC |
| ↑ | L | * | * | HZ | HZ | $Q_7$ | NC |
| ↓ | H | * | * | NC | NC | NC | $Q_S$ |
| ↓ | L | * | * | HZ | HZ | NC | $Q_S$ |

CL=Clock
OE=Output Enable
ST=Strobe
D =Data
PO=Parallel Outputs
SO=Serial Output
* =Don't care
NC=No Change
HZ=High Impedance

## ■ MC14577BF 【MOTOROLA】
**(Dual Video Amplifier)**

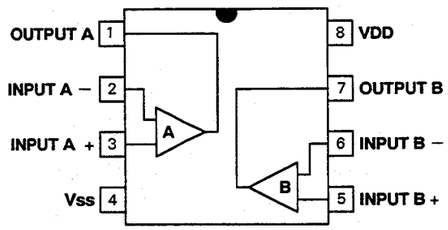


## ■ MC74HC02AF 【MOTOROLA】
**(Quad 2-Input Positive-NOR Gates)**

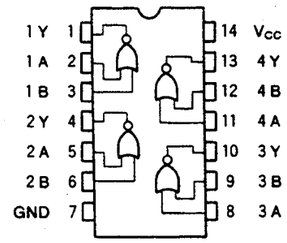


(TOP VIEW)

| A | B | Y |
|---|---|---|
| L | L | H |
| L | H | L |
| H | L | L |
| H | H | L |

## ■ MC74HC04AF 【MOTOROLA】
**(Hex Inverters)**

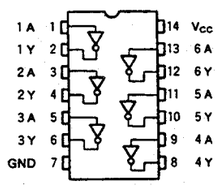


| A | Y |
|---|---|
| L | H |
| H | L |

## ■ MC74HC08AF 【MOTOROLA】
**(Quad 2-Input Positive-AND Gates)**

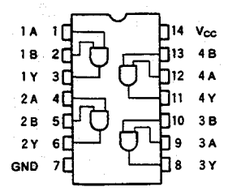


| A | B | Y |
|---|---|---|
| L | L | L |
| L | H | L |
| H | L | L |
| H | H | H |

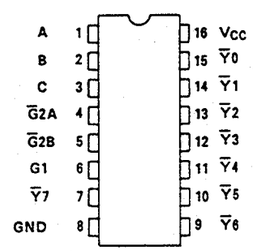


(TOP VIEW)

## ■ MC74HC138AF 【MOTOROLA】
**(3-Line to 8-Line Decoders/ Demultiplexers)**

| INPUTS | | | | | | OUTPUTS | | | | | | | | SELECTED OUTPUT |
|---|---|---|---|---|---|---|---|---|---|---|---|---|---|---|
| ENABLE | | | SELECT | | | | | | | | | | | |
| G1 | G2A | G2B | C | B | A | Y0 | Y1 | Y2 | Y3 | Y4 | Y5 | Y6 | Y7 | |
| L | X | X | X | X | X | H | H | H | H | H | H | H | H | NONE |
| X | H | X | X | X | X | H | H | H | H | H | H | H | H | NONE |
| X | X | H | X | X | X | H | H | H | H | H | H | H | H | NONE |
| H | L | L | L | L | L | L | H | H | H | H | H | H | H | Y0 |
| H | L | L | L | L | H | H | L | H | H | H | H | H | H | Y1 |
| H | L | L | L | H | L | H | H | L | H | H | H | H | H | Y2 |
| H | L | L | L | H | H | H | H | H | L | H | H | H | H | Y3 |
| H | L | L | H | L | L | H | H | H | H | L | H | H | H | Y4 |
| H | L | L | H | L | H | H | H | H | H | H | L | H | H | Y5 |
| H | L | L | H | H | L | H | H | H | H | H | H | L | H | Y6 |
| H | L | L | H | H | H | H | H | H | H | H | H | H | L | Y7 |

X : DONT' CARE

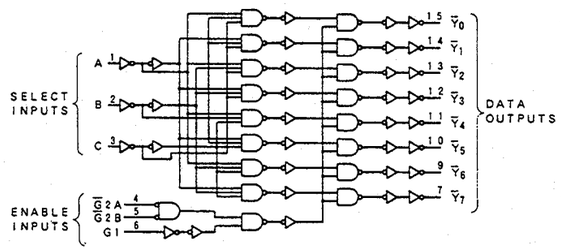



6-34

## ■ MC74HC139AF 【MOTOROLA】
**(Dual 2-Line to 4-Lile Decoders/ Demultiplexers)**

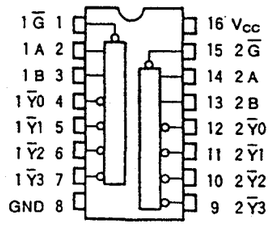


| INPUTS | | | OUTPUTS | | | | SELECTED OUTPUT |
|---|---|---|---|---|---|---|---|
| ENABLE | SELECT | | | | | | |
| $\overline{G}$ | B | A | $\overline{Y0}$ | $\overline{Y1}$ | $\overline{Y2}$ | $\overline{Y3}$ | |
| H | X | X | H | H | H | H | NONE |
| L | L | L | L | H | H | H | $\overline{Y0}$ |
| L | L | H | H | L | H | H | $\overline{Y1}$ |
| L | H | L | H | H | L | H | $\overline{Y2}$ |
| L | H | H | H | H | H | L | $\overline{Y3}$ |

X : Don't care

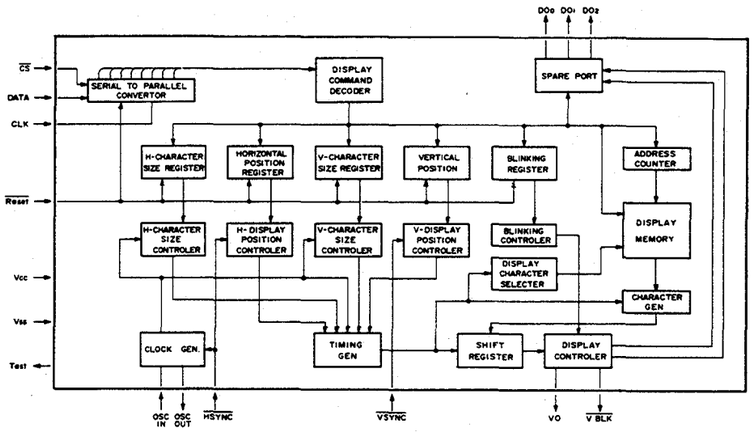


## ■ MC74HC373F 【MOTOROLA】
**(Octal D-Type Transparent Latches With 3-State Output)**

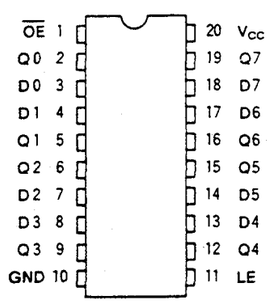


| INPUTS | | | OUTPUTS |
|---|---|---|---|
| $\overline{OE}$ | LE | D | |
| H | X | X | Z |
| L | L | X | $Q_n$ |
| L | H | L | L |
| L | H | H | H |

X : Don't Care
Z : Hi impedance
Qn : Q output level before the LE become "L".

## ■ MC74HC14AF 【MOTOROLA】
**(Hex Schmitt-Trigger Inverters)**

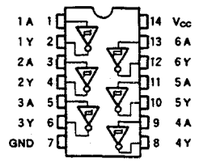


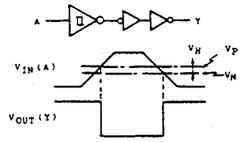


Vcc=4.5 V

$V_P$=2.7 V typ.
$V_N$=1.6 V typ.

## ■ MC74HC367F 【MOTOROLA】
**(Hex Bus Drivers With 3-State NON-Inverted Output)**

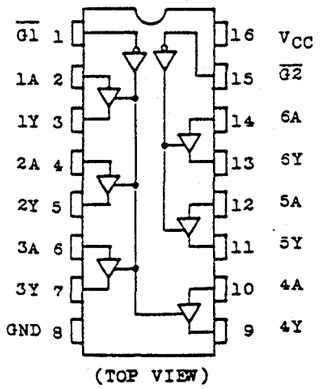


(TOP VIEW)

## ■ MC74HC4053F 【MOTOROLA】
**(Triple 2-Channel Analog Multiplexer/ Demultiplexer)**

For block diagrams of ICs, refer to "MC14053".

## ■ MC74HC165F 【MOTOROLA】
**(Parallel-Load 8-Bit Shift Registers With Complementary Outputs)**

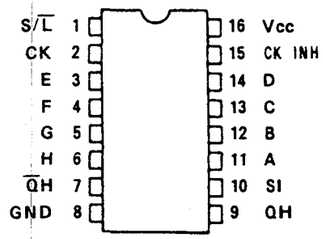


| INPUTS | | | | | INTERNAL OUTPUTS | | OUTPUTS | |
|---|---|---|---|---|---|---|---|---|
| SHIFT/$\overline{LOAD}$ | CLOCK INH | CLOCK | SERIAL IN | PARALLEL A……H | QA | QB | QH | $\overline{QH}$ |
| L | X | X | X | a……h | a | b | h | h |
| H | L | ↑ | H | X | H | QAn | QGn | QGn |
| H | L | ↑ | L | X | L | QAn | QGn | QGn |
| H | ↑ | L | H | X | H | QAn | QGn | QGn |
| H | ↑ | L | L | X | L | QAn | QGn | QGn |
| H | X | H | X | X | No change | | | |
| H | H | X | X | X | No change | | | |

X : Don't care
a.....h : Levels("H" or "L") applied to parallel inputs A.....H
OAn-OGn : OA-OG output levels just before rise of clock

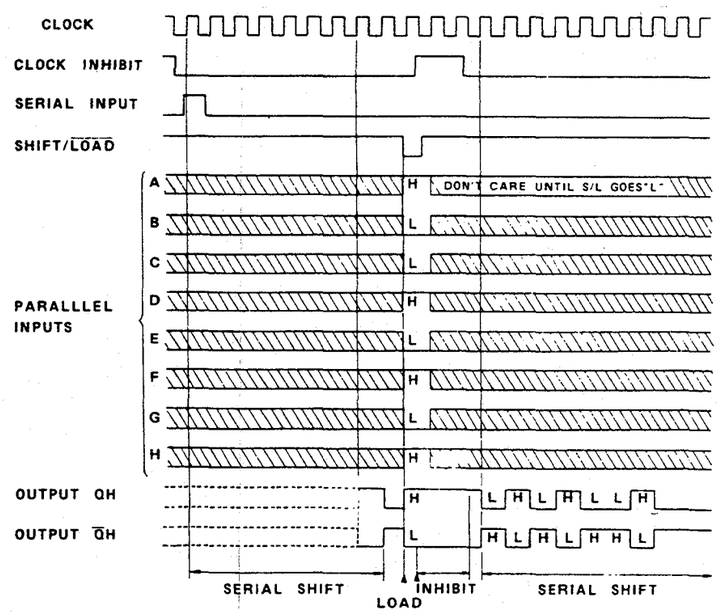

## ■ MC74HC4538F 【MOTOROLA】
**(Dual Retriggerable Monostable Multivibrator)**

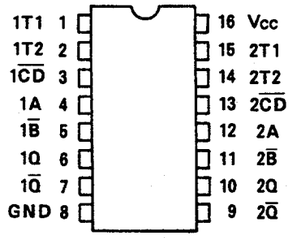


(TOP VIEW)

| INPUT | | | OUTPUT | | NOTE |
|---|---|---|---|---|---|
| A | B | CD | Q | Q | |
| ↑ | H | H | ⊓ | ⊔ | OUTPUT ENABLE |
| X | L | H | L | H | INHIBIT |
| H | X | H | L | H | INHIBIT |
| L | ↓ | H | ⊓ | ⊔ | OUTPUT ENABLE |
| X | X | L | L | H | INHIBIT |

X:Don't Care

## ■ MC74HC74AF 【MOTOROLA】
**(Dual D-Type Positive-EDGE-Triggered Flip-Flops With Preset AND Clear)**

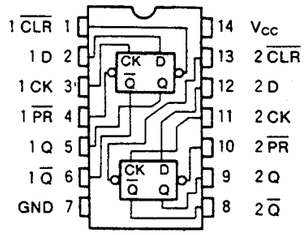


(TOP VIEW)

| INPUTS | | | | OUTPUTS | | FUNCTION |
|---|---|---|---|---|---|---|
| CLR | PR | D | CK | Q | Q | |
| L | H | X | X | L | H | CLEAR |
| H | L | X | X | H | L | PRESET |
| L | L | X | X | H | H | — |
| H | H | L | ↑ | L | H | — |
| H | H | H | ↑ | H | L | — |
| H | H | X | ↓ | $Q_n$ | $\overline{Q}_n$ | NO CHANGE |

X : Don't care

## ■ NJM319M 【JRC】
**(Voltage Comparator)**

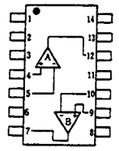


Pin Arrangement
1. NC
2. NC
3. A GND
4. A+INPUT
5. A−INPUT
6. V⁻
7. B OUTPUT
8. B GND
9. B+INPUT
10. B−INPUT
11. V⁺
12. A OUTPUT
13. NC
14. NC

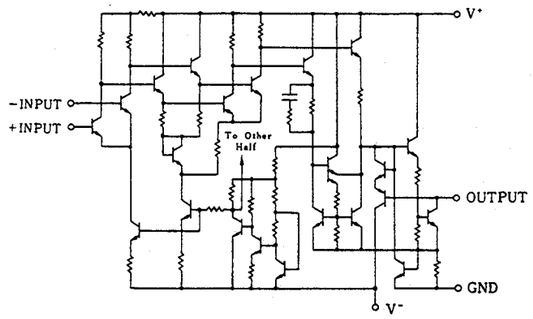


## ■ PLSC1064-V1-00 【JVC】
**(512K Byte Erectric Eraseable Programable ROM)**

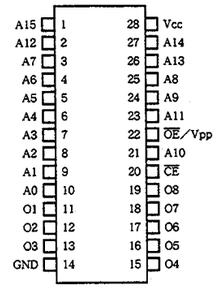


| Symbol | Signal | Symbol | Signal |
|---|---|---|---|
| A0~A15 | Address Input | OE/Vpp | Output Enable/Vcc for PGM |
| O1~O8 | Data Out/Input | Vcc | +5V |
| CE | Chip Enable | GND | 0V |

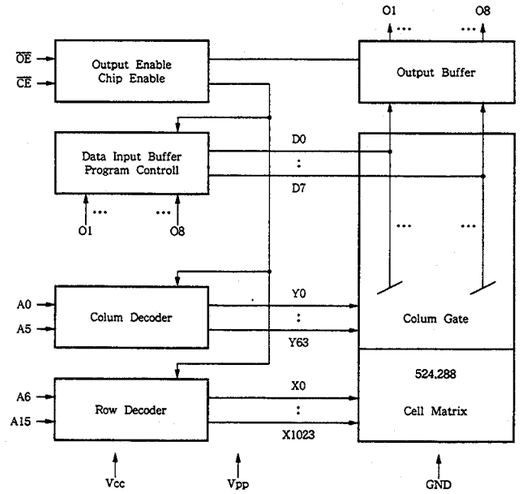


## ■ RC062M 【RAYTHEON】
**(J-Input Op.Amplifier)**

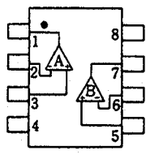

Pin Arrangement
1. A OUTPUT
2. A−INPUT
3. A+INPUT
4. V⁻
5. B+INPUT
6. B−INPUT
7. B OUTPUT
8. V⁺

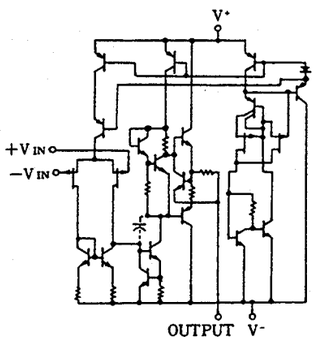


## ■ RC064M 【RAYTHEON】
**(J-Input Op.Amplifier)**

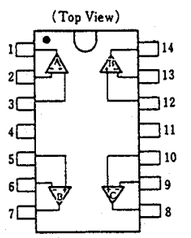


Pin Arrangement
1. A OUTPUT
2. A−INPUT
3. A+INPUT
4. V⁺
5. B+INPUT
6. B−INPUT
7. B OUTPUT
8. C OUTPUT
9. C−INPUT
10. C+INPUT
11. V⁻
12. D+INPUT
13. D−INPUT
14. D OUTPUT

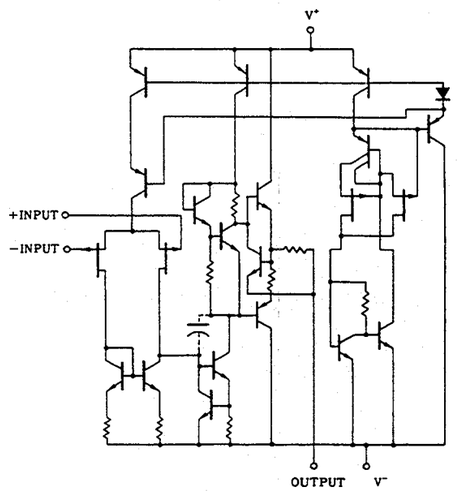


## ■ RC1496M 【RAYTHEON】
**(Balanced Modulator)**

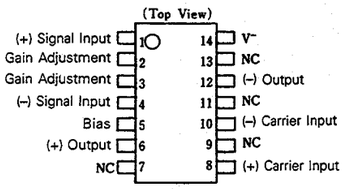


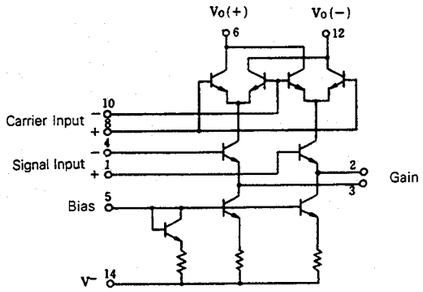



6-36

## ■ RC2068MD 【RAYTHEON】
(Low-Noise Dual Op.Amplifier)

D, Mtype
(Top View)

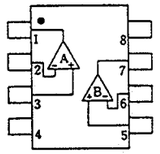

Pin Arrangement
1. A OUTPUT
2. A−INPUT
3. A+INPUT
4. V⁻
5. B+INPUT
6. B−INPUT
7. B OUTPUT
8. V⁺

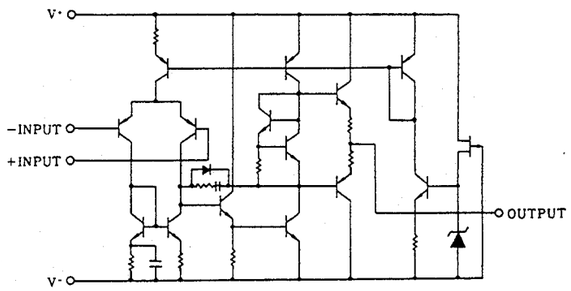


## ■ RC2902M 【RAYTHEON】
(Quad Single Supply Op.Amplifier)

(TOP VIEW)

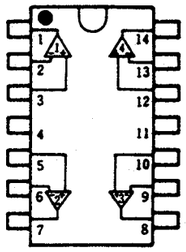

Pin
1. OUTPUT 1
2. −INPUT 1
3. +INPUT 1
4. V⁺
5. +INPUT 2
6. −INPUT 2
7. OUTPUT 2
8. OUTPUT 3
9. −INPUT 3
10. +INPUT 3
11. GROUND
12. +INPUT 4
13. −INPUT 4
14. OUTPUT 4

## ■ RC78L15UA 【RAYTHEON】
(3-Terminal Positive Voltage Regulator (+15V))

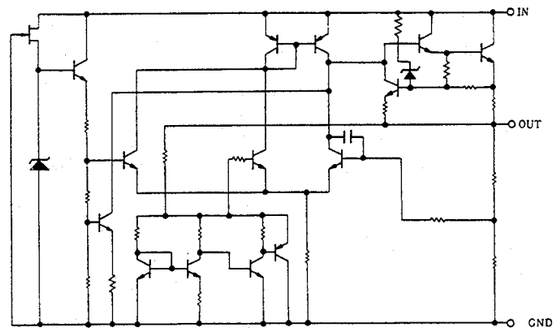


## ■ S-2914ARF10-TB 【SEIKO】
(1K-Bit Serial EE Prom)

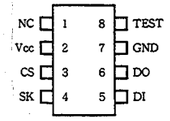


| PIN No. | SIGNAL | PIN No. | SIGNAL |
|---|---|---|---|
| 1 | No Connect | 5 | Serial Data Input |
| 2 | Vcc (+5V) | 6 | Serial Data Output |
| 3 | Chip Select | 7 | GND (0V) |
| 4 | Serial Clock | 8 | No Connect |

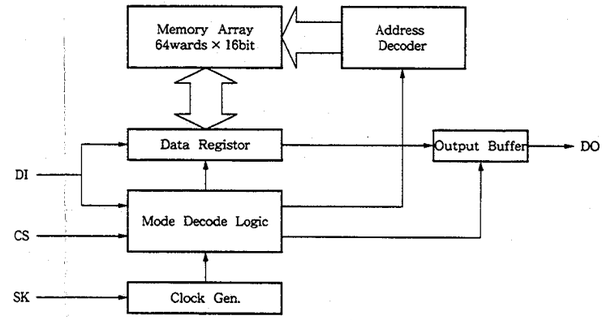


## ■ S-8054HNCB 【SEIKO】
(Voltage Detecter)

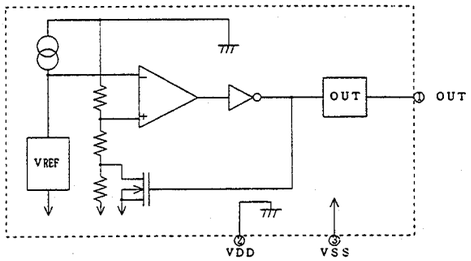


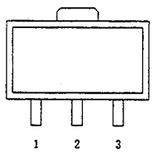


1. OUT
2. VDD
3. VSS

## ■ TC4066BF 【TOSHIBA】
(Quad Analog Switch/Multiplexer)

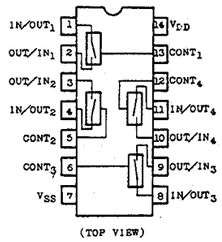


| CONTROL | Impedance Between IN/OUT-OUT/IN ※ |
|---|---|
| H | 0.5~5×10²Ω |
| L | >10⁹Ω |

※ See Electrical Characteristice

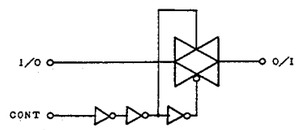


## ■ TC40H008F 【TOSHIBA】
(Quad 2-Input AND Gate)

TC40H008P
AND GATE

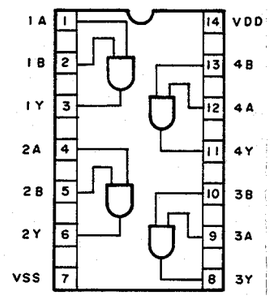


## ■ TC40H032F 【TOSHIBA】
(Quad 2-Input OR Gate)

TC40H032P
OR GATE

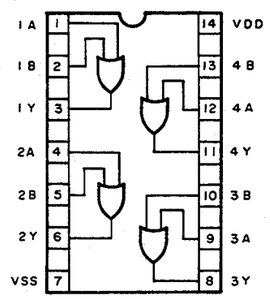


## ■ TC4S66F 【TOSHIBA】
(Bilateral Switch)

(TOP VIEW)

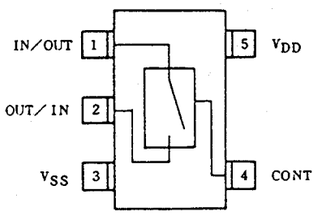


| CONTROL | IMPEDANCE BETWEEN IN/OUT-OUT/IN * |
|---|---|
| H | 0.5 ~ 5 × 10² Ω |
| L | > 10⁹ Ω |

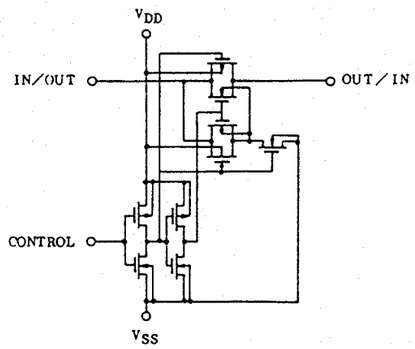


## ■ TC4S69F 【TOSHIBA】
(Inverter Gate)

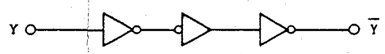


(TOP VIEW)

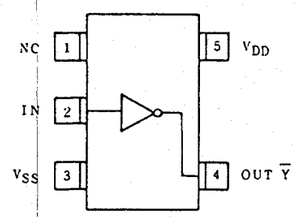



6-37

## ■ TC4S81F 【TOSHIBA】
(2-Input AND Gate)

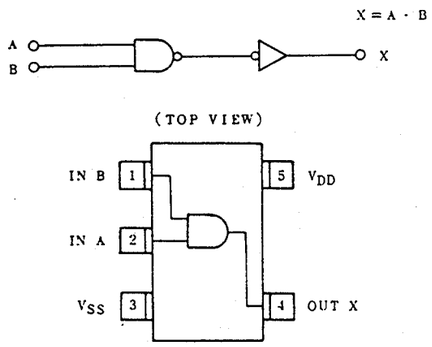


## ■ TC50H000F 【TOSHIBA】
(Hex Buffer (TC4049 Type))

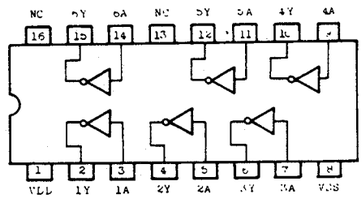

## ■ TC50H001F 【TOSHIBA】
(Hex Buffer (TC4050 Type))

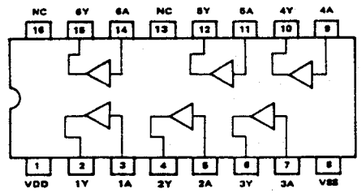

## ■ TC7S00F 【TOSHIBA】
(2-Input Nand Gate)

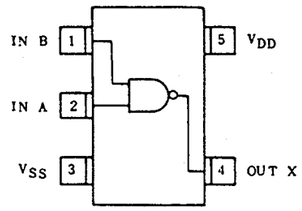


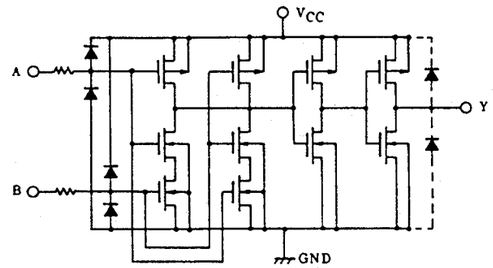


## ■ TC7S02F 【TOSHIBA】
(2 Input Single NOR Gate)

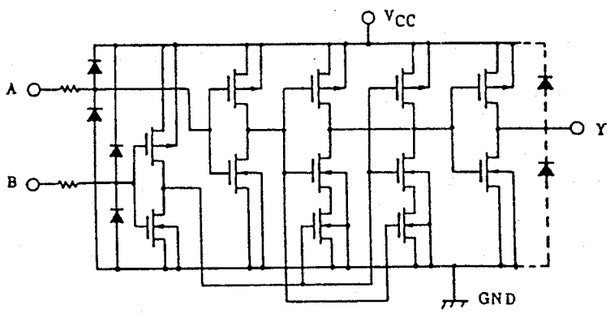


## ■ TC7S08F 【TOSHIBA】
(2 Input Single AND Gate)

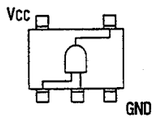


## ■ TC7S86F 【TOSHIBA】
(Single Exelusive OR Gate)

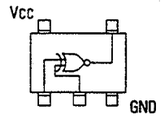


## ■ TC7SU04F 【TOSHIBA】
(Invertor)

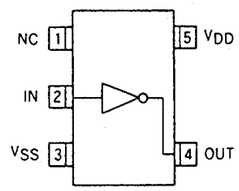


## ■ TL1451CNS 【TEXAS】
(Dual Switching Regulator Controller)

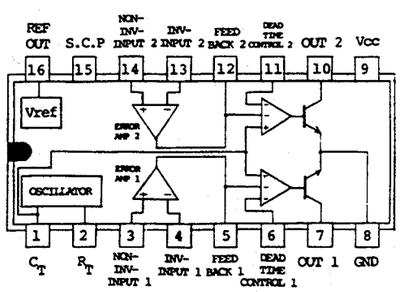


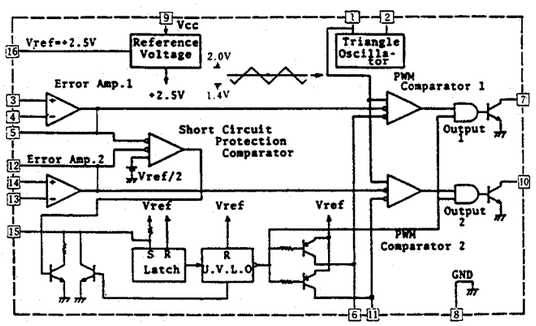


## ■ UA733CNS 【TEXAS】
(Differential Video Amplifier)

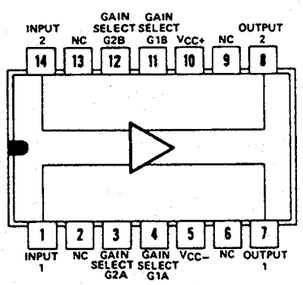


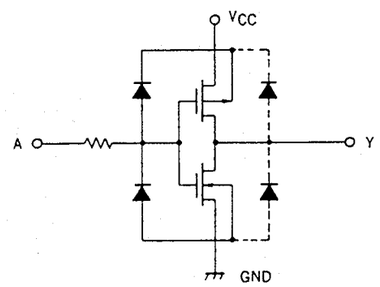




6-38

## ■ UPC812G2 【NEC】
(Op.Amp.)

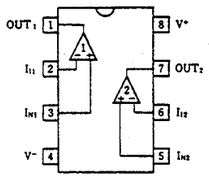


## ■ UPD16502GS 【NEC】
(CCD Imagesensor Driver)

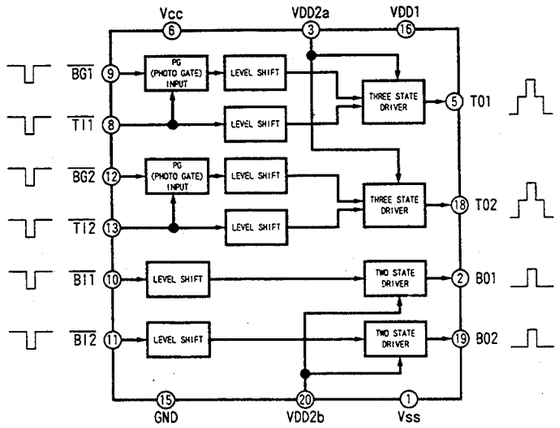


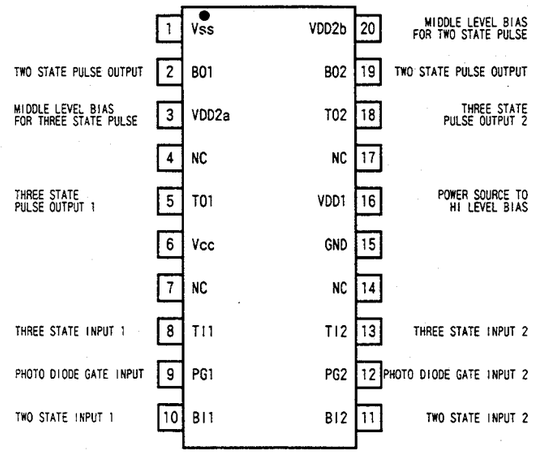


## ■ UPD16503GR 【NEC】
(Level Shifter)

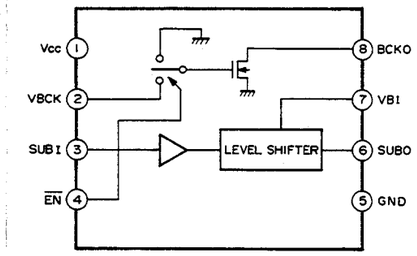


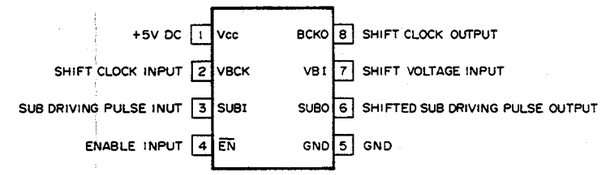


## ■ UPD9318GB 【NEC】
(Clock Pulse Generator For CCD)

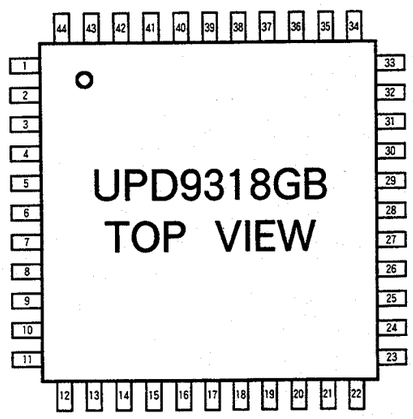


| Pin No. | Symbol | I/O | Description |
|---|---|---|---|
| 1 | OSC1 | O | Main clock output (bufferd) |
| 2 | OSCφ | I | main clock input |
| 3 | GND | - | GND |
| 4 | H1IN | I | Horizontal drive pulse 1 |
| 5 | IVI1 | I | Invertor input 1 |
| 6 | IVI2 | I | Invertor input 2 |
| 7 | H2IN | I | Horizontal drive pulse 2 |
| 8 | VDD | - | VDD |
| 9 | D | I | Data (D-FF input) |
| 10 | C | I | Clock (D-FF input) |
| 11 | R | I | Reset (D-FF input) |
| 12 | Q | O | D-FF output |
| 13 | DIM1 | I | φTG pulse width control 1 |
| 14 | DIM2 | I | φTG pulse width control 2 |
| 15 | SSL1 | I | Mode select 1 |
| 16 | SSL2 | I | Mode select 2 |
| 17 | GND | - | GND |
| 18 | TGIV | I | φTG porality select |
| 19 | OB | O | Optical black |
| 20 | TGA | O | φTG output |
| 21 | TGB | O | φTG output |
| 22 | 2L | O | Pulse output 2L |
| 23 | H2C | O | Pulse output 2C |
| 24 | H2B | O | Pulse output 2B |
| 25 | H2A | O | Pulse output 2A |
| 26 | GND | - | GND |
| 27 | IVO2 | O | Invertor output 2 |
| 28 | VDD | - | VDD |
| 29 | IVO1 | O | Invertor output 1 |
| 30 | GND | - | GND |
| 31 | H1C | O | Pulse output 1C |
| 32 | H1B | O | Pulse output 1B |
| 33 | H2A | O | Pulse output 2A |
| 34 | 1L | O | Pulse output 1L |
| 35 | R3 | O | Reset pulse output 3 |
| 36 | R2 | O | Reset pulse output 2 |
| 37 | R1 | O | Reset pulse output 1 |
| 38 | RINV | I | Reset pulse porality select |
| 39 | VDD | - | VDD |
| 40 | Q15 | O | φM countdown output |
| 41 | Q14 | O | φM countdown output |
| 42 | Q13 | O | φM countdown output |
| 43 | Q12 | O | φM countdown output |
| 44 | S | I | Timing pulse input |

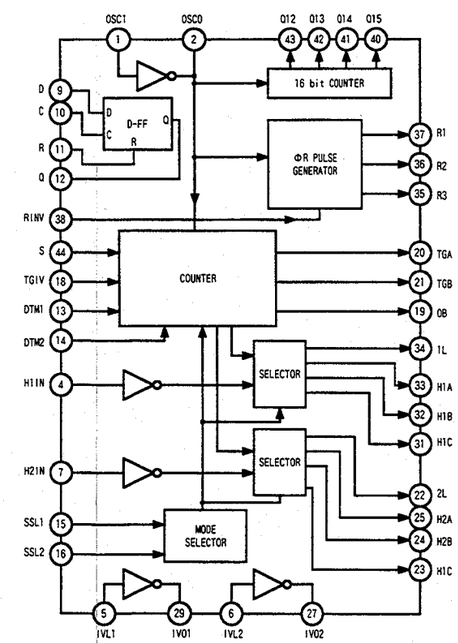

## ■ UPD9421AGK-BE9 【NEC】
## (Clock Pulse Generator for CCD Image Sensor)

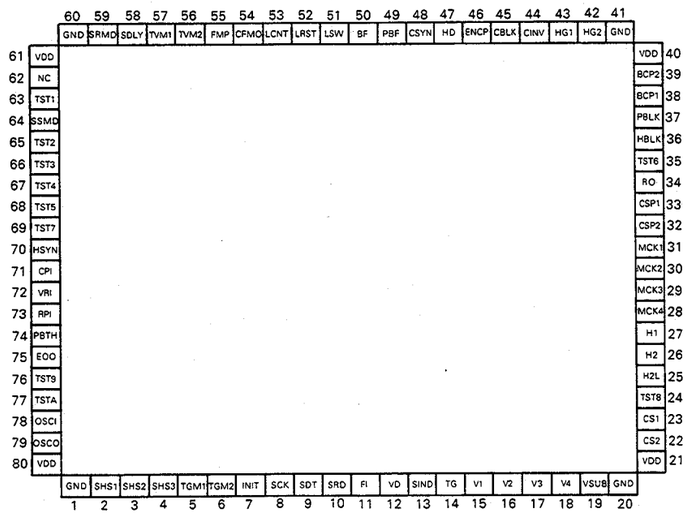


● **Pin function of μPD9421AG** (Timing pulse generator and Shutter pulse controller)

| Pin No. | Symbol | I/O | Pin Name | Function |
|---|---|---|---|---|
| 1 | GND | — | GND | |
| 2<br>3<br>4 | SHS1<br>SHS2<br>SHS3 | I<br>I<br>I | Shutter Speed Setting 1<br>Shutter Speed Setting 2<br>Shutter Speed Setting 3 | Terminals for setting shutter speed. All of these pins are grounded since shutter speed is set by serial data (SDI) in the KY-27.<br>SHS2 / SHS1 / SHS3 = L / SHS3 = H<br>L / L / Normal / 1/1000<br>L / H / 1/100 / 1/2000<br>H / L / 1/250 / 1/4000<br>H / L / 1/500 / 1/8000<br>Every pin is internally pulled down. |
| 5<br>6 | TGM1<br>TGM2 | I<br>I | Store Mode Setting 1<br>Store Mode Setting 2 | Terminals for setting store (readout) mode. These are fixed for field readout in the KY-27.<br>TGM1 / TGM2 / Store mode<br>L / L / Field<br>L / H / Inhibited<br>H / L / Pseudo field (only one line is read a field)<br>H / H / Frame |
| 7 | INIT | I | Serial Interface Reset | Terminal to reset the serial interface to the initial state at power on (Reset by low level input). When the serial interface is not used, this level is fixed to low. |
| 8 | SCK | I | Serial Clock Input | Clock input terminal for input of shutter speed setting serial data. |
| 9 | SDT | I | Serial Data Input | Input terminal for shutter speed setting serial data |
| 10 | SRD | O | Serial Interface Ready Output | Output terminal of enable signal of serial data transmission to micro-processor, etc. Serial data transmission is enabled with low level output. |
| 11 | FI | O | Field Index | Output terminal of field discrimination pulse.<br>Low level output in the 1st field of NTSC or 1st and 3rd fields of PAL. High level output in the 2nd field of NTSC or 2nd and 4th fields of PAL. |
| 12 | VD | O | Vertical Drive | To output pulse at the beginning of every field. This pulse is used as the timing reference in the set. |
| 13 | SIND | O | Shutter Index | N-ch open drain output port to output low level in the normal mode. |
| 14 | TG | O | Transfer Gate Pulse | To output transfer gate drive pulse to read charges of photo cells by the vertical register. |
| 15<br>16<br>17<br>18 | V1<br>V2<br>V3<br>V4 | O<br>O<br>O<br>O | Vertical Transfer Pulse 1<br>Vertical Transfer Pulse 2<br>Vertical Transfer Pulse 3<br>Vertical Transfer Pulse 4 | To output CCD vertical register drive pulse to the CCD sensor through the inverter driver. |
| 19 | VSUB | O | Board Shutter Pulse | Output terminal of shutter pulse for VOD (Vertical Overflow Drain method) shutter operation of the CCD sensor |
| 20 | GND | O | Ground | |
| 21 | VDD | O | Power Supply | +5 V power supply terminal |
| 22 | CS2 | O | Color Sampling Pulse 2 | To output sampling pulse for color separation sample holding. Color phase can be set by CSP1 (pin 33) and CSP2 (pin 32).<br>Color phase is different from CS1 at an angle of 180°. |
| 23 | CS1 | O | Color Sampling Pulse 1 | To output sampling pulse for color separation sample holding. Color phase can be set by CSP1 (pin 33) and CSP2 (pin 32). |
| 24 | TST8 | — | Test Pin 8 | Test pin pulled down internally. To be fixed at low level in general. |

| Pin No. | Symbol | I/O | Pin Name | Function |
|---|---|---|---|---|
| 25 | H2L | O | Horizontal Last Gate Transfer Pulse | Output terminal of horizontal drive pulse whose level is high during horizontal blanking period. This output is directly supplied to øH2L terminal of the CCD sensor. |
| 26 | H2 | O | Horizontal Transfer Pulse 2 | Output terminal of horizontal drive pulse whose level is high during horizontal blanking period. This output is directly supplied to øH2 terminal of the CCD sensor. |
| 27 | H1 | O | Horizontal Transfer Pulse 1 | Output terminal of horizontal drive pulse whose level is low during horizontal blanking period. This output is directly supplied to øH1 terminal of the CCD sensor. |
| 28 | MCK4 | O | Main Clock 4 | Output terminal of main clock |
| 29 | MCK3 | O | Main Clock 3 | Output terminal of main clock |
| 30 | MCK2 | O | Main Clock 2 | Output terminal of main clock |
| 31 | MCK1 | O | Main Clock 1 | Output terminal of main clock |
| 32<br>33 | CSP2<br>CSP1 | I<br>I | Color Sampling Phase Setting 1<br>Color Sampling Phase Setting 2 | For phase setting of output signals of CS1 (pin 23) and CS2 (pin 22). According to setting of these pins, clocks of MCK1 to MCK4 (pins 28 to 31) are output from CS2 and CS1.<br>CSP1 / CSP2 / CS1 / CS2<br>L / L / MCK1 / MCK1<br>L / H / MCK2 / MCK2<br>H / L / MCK3 / MCK3<br>H / H / MCK4 / MCK4 |
| 34 | R0 | O | Horizontal Output Reset | Output terminal of CCD sensor output reset pulse. Output reset timing pulse of this terminal is added with DC component and is supplied to øR terminal of the CCD sensor. The polarity is positive. |
| 35 | TST6 | — | Test Pin 6 | Test terminal pulled down internally. Level is generally fixed to low. |
| 36 | HBLK | O | Horizontal Transfer Blanking | This output applies blanking to horizontal transfer pulse since CCD horizontal transfer register should be stopped every time it scans a line in the vertical transfer period. |
| 37 | PBLK | O | Pre-composit e Blanking | To output wider blanking than CBLK (pin 45) for the trailing edge |
| 38 | BCP1 | O | Optical Black Clamping 1 | To output pulse for clamping optical black of every sensor output line. Composite output with low level when effective pixel is absent in the blanking period. |
| 39 | BCP2 | O | Optical Black Clamping 2 | To output pulse for clamping optical black of every sensor output line. Composite output with low level when effective pixel is absent in the blanking period. |
| 40 | VDD | — | Power Supply | +5 V power supply terminal |
| 41 | GND | — | Ground | Grounding terminal |
| 42 | HG2 | O | Horizontal Gate 2 | Line discrimination signal output for color demodulation.<br>NTSC : To reset every 277 lines<br>CCIR : To reset every 322 lines<br>(Make sure that this is not inversion pulse of HG1.) |
| 43 | HG1 | O | Horizontal Gate 1 | Line discrimination signal output for color demodulation.<br>NTSC : To reset every 14 lines<br>CCIR : To reset every 9 lines |
| 44 | CINV | I | Color Separation Carrier Inversion | Input terminal to change over the phase of color separation pulses CS1 (pin 23) and CS2 (pin 22). This terminal is internally pulled up and generally connected with HG1 output (pin 43). |



| Pin No. | Symbol | I/O | Pin Name | Function |
|---|---|---|---|---|
| 45 | CBLK | O | Composite Blanking | To output pulse to be used for video blanking in the encoder.<br>NTSC : H : 11.01 µs, V : 20 H blanking<br>CCIR : H : 12.02 µs, V : 25 H blanking |
| 46 | ENCP | O | Encoder Clamping | Pulse output for DC component reproduction in the encoder.<br>1H period continuous pulse. |
| 47 | HD | O | Horizontal Drive Pulse Output | To output pulse synchronizing with the beginning of every line. To be used as horizontal reference pulse in the set. |
| 48 | CSYN | O | Composite Sync. Signal | Standard composite sync. signal for NTSC and CCIR systems.<br>NTSC : Conforms to RS-170<br>PAL : Conforms to CCIR<br>SECAM : Conforms to CCIR |
| 49 | PBF | O | Pre-burst Flag Pulse Output | NTSC, PAL : To output signal whose timing is faster than BF output (pin 50).<br>SECAM : To output IDP pulse to insert scan line discrimination signal in the vertical blanking period. |
| 50 | BF | O | Burst Flag Pulse Output | Output pulse to form and insert burst signal in the color encoder.<br>SECAM : SCBL |
| 51 | LSW | O | Line Switch | Output of line discrimination signal. In the event of internal synchronization, level is low at the 1st line of the 1st field. |
| 52 | LRST | I | Line Switch Reset | External reset signal input to reset LSW output (pin 51) in case of external synchronization. This terminal is internally pulled up.<br>5V<br>0<br>2H<br>Be sure that phase and pulse width are equalized to burst flag. |
| 53 | LCNT | I | Line Switch Control | Timing control signal input for generating line switch signal in external synchronization. This terminal is internally pulled down. |
| 54 | CFMO | O | Color Frame Output | Pulse output at the beginning of every color frame. Period is 4 fields for NTSC or 8 fields for CCIR. |
| 55 | FMP | O | Frame Pulse Output | Output terminal of color frame discrimination signal for try state. |
| 56<br>57 | TVM2<br>TVM | I<br>I | | Terminals for TV mode setting<br>TVM1 / TVM2 / TV mode<br>L / L / NTSC<br>L / H / PAL-M<br>H / L / PAL<br>H / H / SECAM |
| 58 | SDLY | I | System Delay Switching | To switch system delay time. |
| 59 | SRMD | I | Serial Interface Operation Mode | To switch receiving period of serial interface.<br>L : Vertical blanking period<br>H : Always |
| 60 | GND | — | Ground | Ground terminal |
| 61 | VDD | — | Power Supply | +5 V power supply terminal |
| 62 | NC | — | Non-contact | Non-contact terminal. To be open. |
| 63 | TST1 | I | Test Pin 1 | Test terminal pulled down internally. Generally fixed to low level. |
| 64 | SSMD | I | Smear Sweep Mode Setting | To determine smear sweep or not.<br>Low level : Inactivated<br>High level : Activated<br>This terminal is internally pulled down. |

| Pin No. | Symbol | I/O | Pin Name | Function |
|---|---|---|---|---|
| 65 | TST2 | — | Test Pin 2 | Test terminals which are pulled down internally. |
| 66 | TST3 | — | Test Pin 3 | |
| 67 | TST4 | — | Test Pin 4 | |
| 68 | TST5 | — | Test Pin 5 | |
| 69 | TST7 | — | Test Pin 7 | |
| 70 | HSYC | O | Horizontal Sync. Signal | |
| 71 | CPI | I | Comparison Clock Input | Input terminal of phase comparator. To detect rise of input signal. |
| 72 | VRI | I | External V. Sync. Signal Input | Input terminal of vertical sync. signal for external synchronization. To detect fall of signal. Internal pull-up terminal for Schmitt trigger input. |
| 73 | RPI | I | External H. Sync Signal Input | Input terminal of horizontal sync. signal for external synchronization. To detect rise of signal. Internal pull-up terminal for Schmitt trigger input. |
| 74 | PBTH | I | Synchronizing System Switch | Internal pull-down terminal to switch synchronizing system.<br>Low level : Internal synchronization<br>High level : External synchronization |
| 75 | EOO | O | Phase Detector Output | Output terminal of phase comparison between CSYN horizontal sync. signal component and RPI input signal. To detect leading edge of horizontal sync signal. |
| 76 | TST9 | — | Test Pin 9 | Test terminals which are internally pulled down. |
| 77 | TSTA | — | Test Pin A | |
| 78 | OSCI | I | Oscillation Input | Input terminal for internal oscillation circuit. |
| 79 | OSCO | O | Oscillation Output | Output terminal for internal oscillation circuit. Frequency of oscillation output is double of horizontal drive frequency. |
| 80 | VDD | — | Power Supply | +5 V power supply terminal |



**NTSC H. TIMMING**

(unit : µsec)

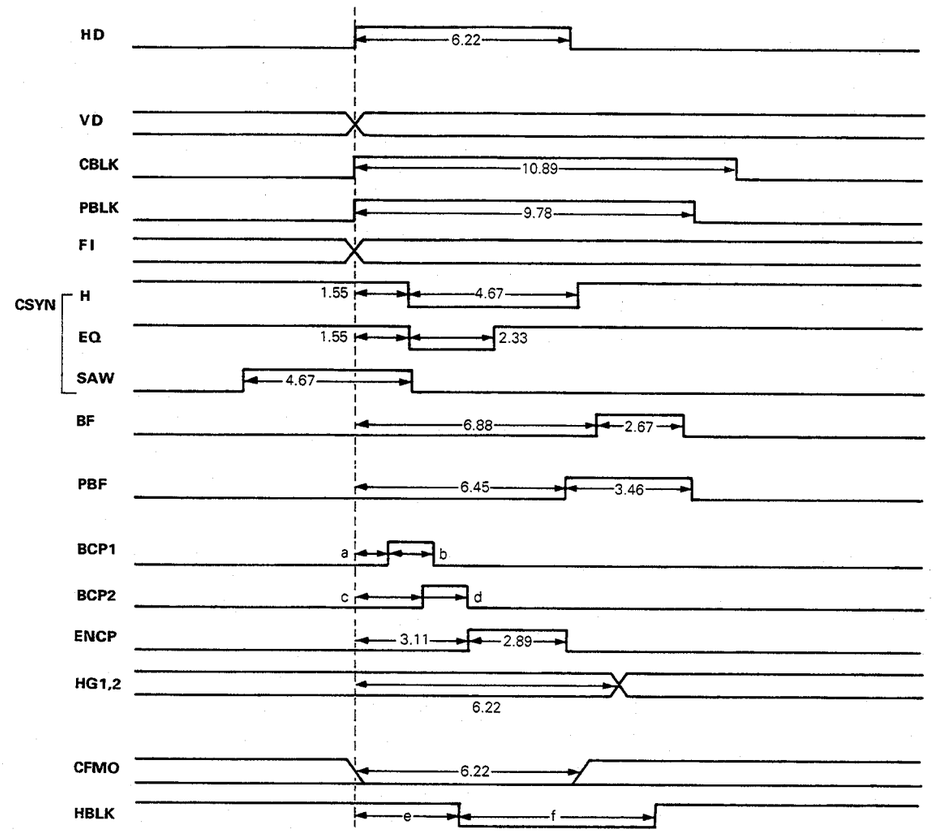


| | SDLY=L | SDLY=H |
|---|---|---|
| a | 0.78 | 1.29 |
| d | 1.11 | 1.11 |
| c | 1.56 | 2.07 |
| d | 1.11 | 1.11 |
| e | 2.44 | 2.96 |
| f | 6.36 | 6.36 |

## NTSC V. TIMMING

**1st fieid**

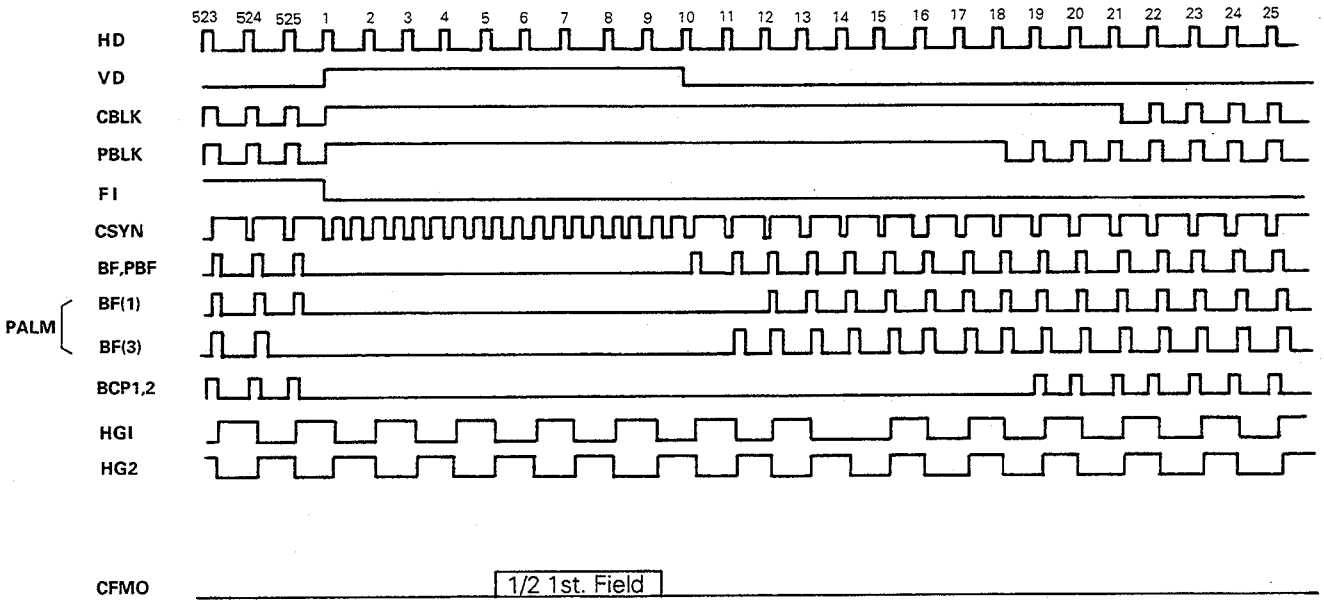


**2nd field**

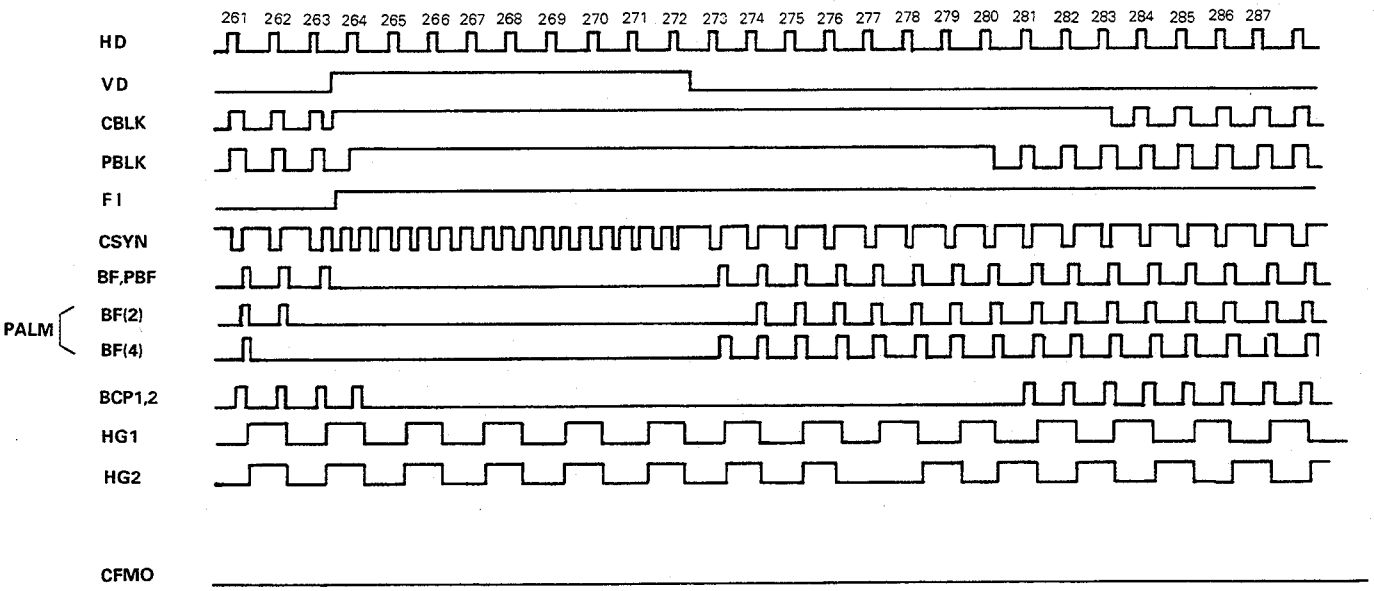

## PAL H. TIMMING

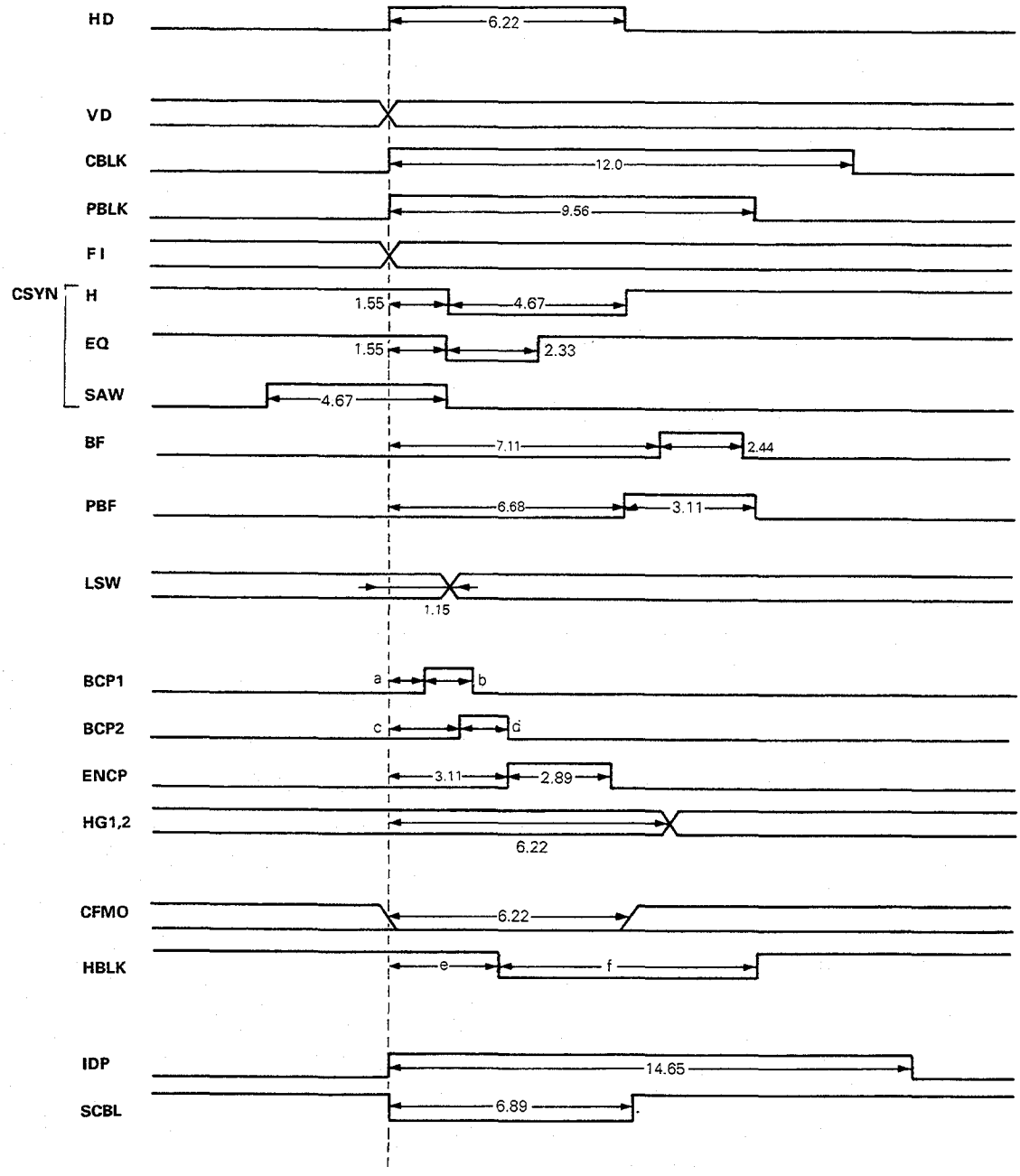


| | SDLY=L | SDLY=H |
|---|---|---|
| a | 0.78 | 1.29 |
| d | 1.11 | 1.11 |
| c | 1.56 | 2.07 |
| d | 1.11 | 1.11 |
| e | 2.44 | 2.96 |
| f | 6.81 | 6.81 |

## PAL V. TIMMING

**1,3 field**

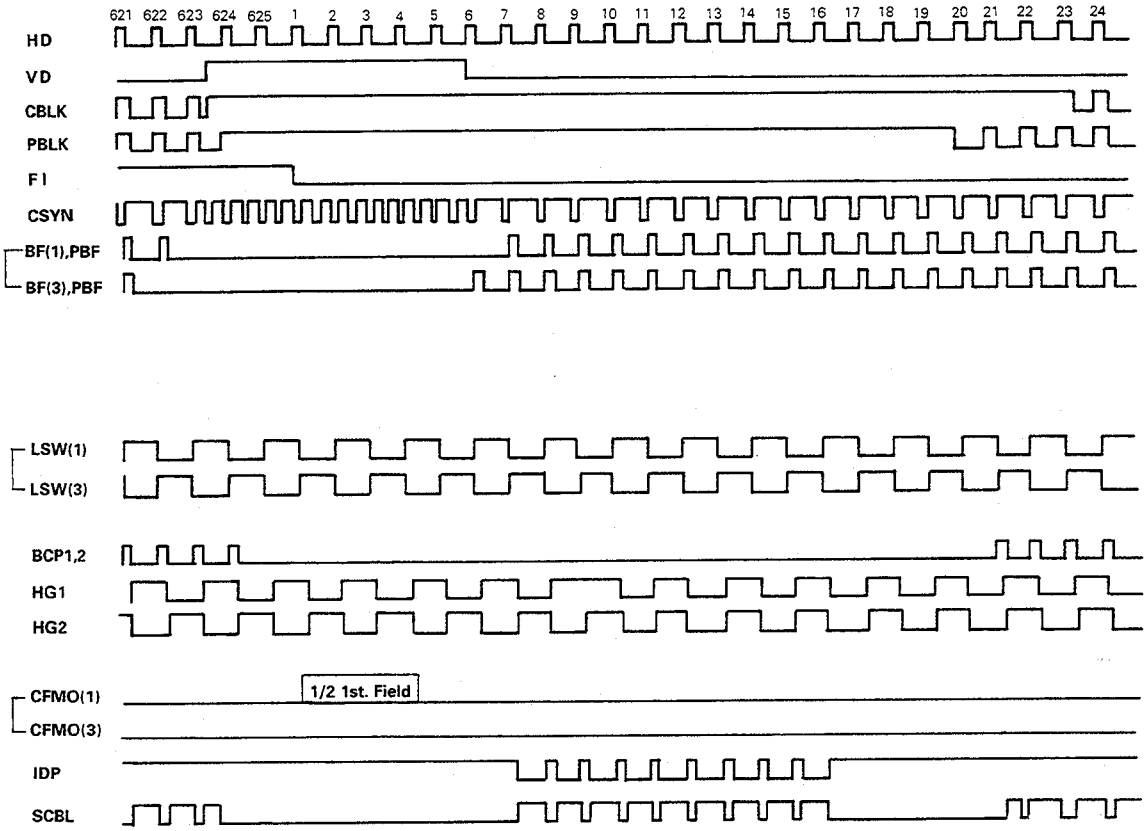


**2,4 field**

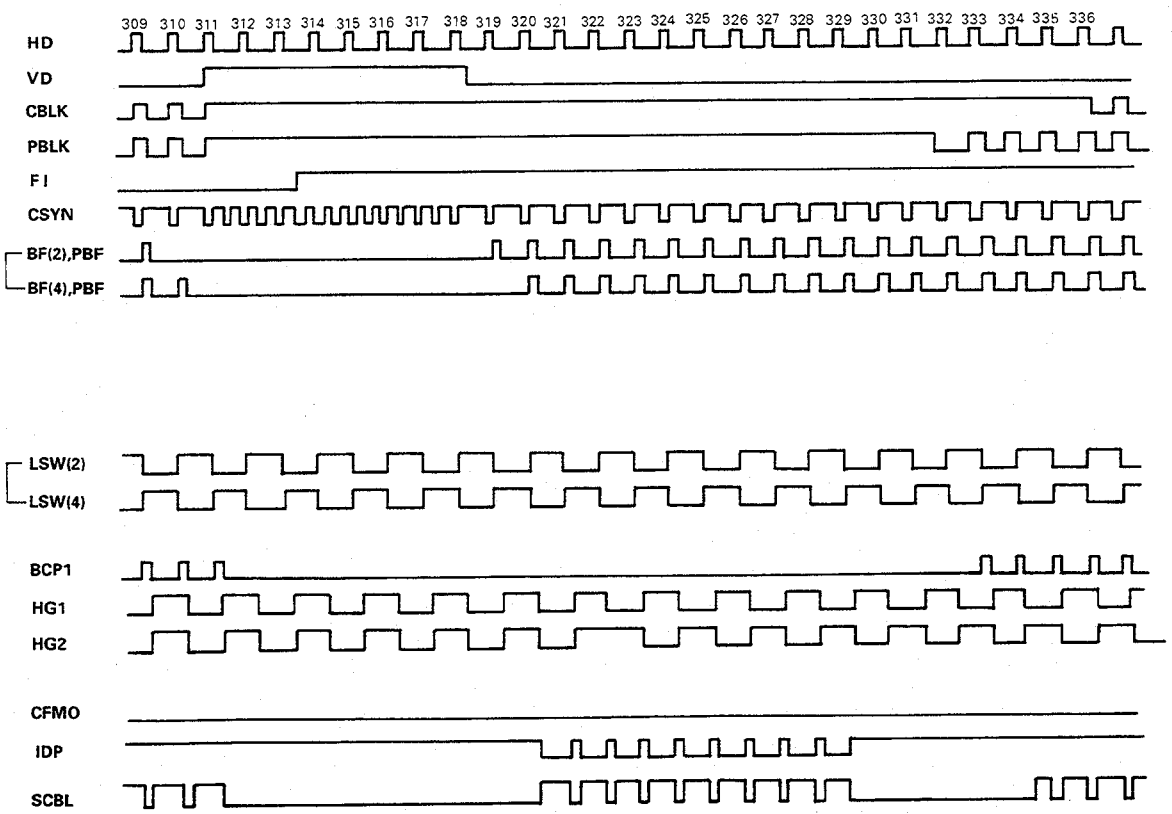

# SECTION 7
# ELECTRICAL PARTS LIST

## SAFETY PRECAUTION

**Parts identified by the ⚠ symbol are critical for safety. Replace only with specified part numbers. For maximum reliability and performance, all other replacement parts should be identical to those specified.**

**ABBREVIATIONS IN THIS LIST ARE AS FOLLOWS:**

RESISTORS — All resistance values are in ohms (Ω).

| | | |
|---|---|---|
| K | : | 1 000 |
| M | : | 1 000 000 |
| CR | : | Carbon Resistor |
| VR | : | Variable Resistor (Potentiometer) |
| MFR | : | Metal Film Resistor |

CAPACITORS — All capacitance values are in μF, unless otherwise indicated.

| | | |
|---|---|---|
| P | : | μμF |
| C Cap | : | Ceramic Capacitor |
| E Cap | : | Electrolytic Capacitor |
| F Cap | : | Film Mica Capacitor |
| MY Cap | : | Mylar Capacitor |
| NP Cap | : | Non-polar Capacitor |
| T Cap | : | Tantalum Capacitor |
| TR Cap | : | Trimmer Capacitor |
| MP Cap | : | Metalized Paper Capacitor |

**Note:** In the "Description" column of the parts list, (U) means the parts for the U version while (E) is for the E version.

| Symbol No. | Part No. | Part Name | Description | | |
|---|---|---|---|---|---|
| IC3 | SCV1585-064 | I.C.(M) | JVC | (U) | ← for U version |
| | SCV1585-067 | I.C.(M) | JVC | (E) | ← for E version |

## 7.1 DR1 board assembly list [0][5]
**for U version 〈SCK2310-01-N0A〉**
**for E version 〈SCK2310-01-P0A〉** [0][5][ ][ ][ ][ ][ ][ ]

| Symbol No. | Part No. | Part Name | Description | |
|---|---|---|---|---|
| IC1 | UPD16503GR | I.C.(M) | NEC | |
| IC2 | UPD16503GR | I.C.(M) | NEC | |
| IC3 | UPD16503GR | I.C.(M) | NEC | |
| IC4 | MC74HC14AF | I.C.(M) | MOTOROLA | |
| IC5 | TC7S00F | I.C.(M) | TOSHIBA | |
| IC6 | TC7S08F | I.C.(M) | TOSHIBA | |
| IC7 | TC40H032F | I.C.(M) | TOSHIBA | |
| IC8 | RC78L15UA | I.C.(M) | RAYTHEON | |
| IC9 | TC7S00F | I.C.(M) | TOSHIBA | |
| Q1 | 2SD1820(QR) | TRANSISTOR | MATSUSHITA | |
| Q2 | 2SD1820(QR) | TRANSISTOR | MATSUSHITA | |
| Q3 | 2SD1820(QR) | TRANSISTOR | MATSUSHITA | |
| Q4 | 2SD874(QR) | TRANSISTOR | MATSUSHITA | |
| D1 | MA142A | SI DIODE | MATSUSHITA | |
| D2 | MA142A | SI DIODE | MATSUSHITA | |
| D3 | MA142A | SI DIODE | MATSUSHITA | |
| D4 | RD16MB1 | ZENER DIODE | NEC | |
| D5 | MA143A | SI DIODE | MATSUSHITA | |
| D6 | HZM24NB | ZENNER DIODE | HITACHI | |
| D8 | MA143A | SI DIODE | MATSUSHITA | |
| D9 | HZM24NB | ZENNER DIODE | HITACHI | |
| D11 | MA143A | SI DIODE | MATSUSHITA | |
| D12 | HZM24NB | ZENNER DIODE | HITACHI | |
| D14 | HSM88AS | SI DIODE | HITACHI | |
| R1 | NRSA02J-472 | M.G.RESISTOR | 4.7K | 1/10W |
| R2 | NRSA02J-472 | M.G.RESISTOR | 4.7K | 1/10W |
| R3 | NRSA02J-102 | M.G.RESISTOR | 1.0K | 1/10W |
| R4 | NRSA02J-102 | M.G.RESISTOR | 1.0K | 1/10W |
| R5 | NRSA02J-822 | M.G.RESISTOR | 8.2K | 1/10W |
| R6 | NRSA02J-473 | M.G.RESISTOR | 47K | 1/10W |
| R7 | NRSA02J-822 | M.G.RESISTOR | 8.2K | 1/10W |
| R8 | NRSA02J-473 | M.G.RESISTOR | 47K | 1/10W |
| R9 | NRSA02J-822 | M.G.RESISTOR | 8.2K | 1/10W |
| R10 | NRSA02J-473 | M.G.RESISTOR | 47K | 1/10W |
| R11 | NRSA02J-332 | M.G.RESISTOR | 3.3K | 1/10W |
| R12 | NRSA02J-473 | M.G.RESISTOR | 47K | 1/10W |
| R13 | NRSA02J-100 | M.G.RESISTOR | 10 | 1/10W |
| R15 | NRSA02J-223 | M.G.RESISTOR | 22K | 1/10W |
| R16 | NRSA02J-222 | M.G.RESISTOR | 2.2K | 1/10W |
| R17 | NRSA02J-473 | M.G.RESISTOR | 47K | 1/10W |
| R19 | NRSA02J-223 | M.G.RESISTOR | 22K | 1/10W |
| R20 | NRSA02J-222 | M.G.RESISTOR | 2.2K | 1/10W |
| R21 | NRSA02J-473 | M.G.RESISTOR | 47K | 1/10W |
| R22 | NRSA02J-102 | M.G.RESISTOR | 1.0K | 1/10W |
| R23 | NRSA02J-223 | M.G.RESISTOR | 22K | 1/10W |
| R24 | NRSA02J-222 | M.G.RESISTOR | 2.2K | 1/10W |
| R25 | NRSA02J-473 | M.G.RESISTOR | 47K | 1/10W |
| R26 | NRSA02J-472 | M.G.RESISTOR | 4.7K | 1/10W |
| R27 | NRSA02J-102 | M.G.RESISTOR | 1.0K | 1/10W |
| R28 | NRSA02J-102 | M.G.RESISTOR | 1.0K | 1/10W |
| R29 | NRSA02J-331 | M.G.RESISTOR | 330 | 1/10W |
| R30 | NRSA02J-471 | M.G.RESISTOR | 470 | 1/10W |
| R31 | NRSA02J-100 | M.G.RESISTOR | 10 | 1/10W |
| R32 | NRSA02J-223 | M.G.RESISTOR | 22K | 1/10W |
| R33 | NRSA02J-562 | M.G.RESISTOR | 5.6K | 1/10W |

| Symbol No. | Part No. | Part Name | Description | |
|---|---|---|---|---|
| R34 | NRSA02J-103 | M.G.RESISTOR | 10K | 1/10W |
| R35 | NRSA02J-183 | M.G.RESISTOR | 18K | 1/10W |
| R36 | NRSA02J-105 | M.G.RESISTOR | 1.0M | 1/10W |
| R39 | NRSA02J-472 | M.G.RESISTOR | 4.7K | 1/10W |
| R40 | NRSA02J-103 | M.G.RESISTOR | 10K | 1/10W |
| R41 | NRSA02J-220 | M.G.RESISTOR | 22 | 1/10W |
| R42 | NRSA02J-220 | M.G.RESISTOR | 22 | 1/10W |
| R43 | NRSA02J-220 | M.G.RESISTOR | 22 | 1/10W |
| VR1 | NVP1416-203 | V RESISTOR | 20K | B V SUB |
| VR2 | NVP1416-203 | V RESISTOR | 20K | G V SUB |
| VR3 | NVP1416-203 | V RESISTOR | 20K | R V SUB |
| VR5 | NVP1416-102 | V RESISTOR | 1K | HP |
| VR6 | NVP1416-102 | V RESISTOR | 1K | CP |
| VR7 | NVP1416-102 | V RESISTOR | 1K | SHP |
| C1 | NCB21EK-473 | C CAP | 0.047 | 25V |
| C2 | NCB21EK-473 | C CAP | 0.047 | 25V |
| C3 | NEA11EM-106 | E CAP | 10 | 25V |
| C4 | NCB21EK-473 | C CAP | 0.047 | 25V |
| C5 | NCB21EK-473 | C CAP | 0.047 | 25V |
| C6 | NCB21EK-473 | C CAP | 0.047 | 25V |
| C7 | NCB21EK-473 | C CAP | 0.047 | 25V |
| C8 | NCB21EK-473 | C CAP | 0.047 | 25V |
| C9 | NCB21EK-473 | C CAP | 0.047 | 25V |
| C10 | NCB21EK-473 | C CAP | 0.047 | 25V |
| C11 | NEA11EM-336 | E CAP | 33 | 25V |
| C12 | NCB21EK-473 | C CAP | 0.047 | 25V |
| C13 | NEA11AM-336 | E CAP | 33 | 10V |
| C14 | NCB21EK-473 | C CAP | 0.047 | 25V |
| C15 | NCF21HZ-473 | C CAP | 0.047 | 50V |
| C16 | NEA11HM-105 | E CAP | 1.0 | 50V |
| C17 | NEA11EM-226 | E CAP | 22 | 25V |
| C18 | NCB21EK-473 | C CAP | 0.047 | 25V |
| C19 | NCF21HZ-473 | C CAP | 0.047 | 50V |
| C20 | NEA11HM-105 | E CAP | 1.0 | 50V |
| C21 | NEA11EM-226 | E CAP | 22 | 25V |
| C22 | NCB21EK-473 | C CAP | 0.047 | 25V |
| C23 | NCB21EK-473 | C CAP | 0.047 | 25V |
| C24 | NCF21HZ-473 | C CAP | 0.047 | 50V |
| C25 | NEA11HM-105 | E CAP | 1.0 | 50V |
| C26 | NEA11EM-226 | E CAP | 22 | 25V |
| C27 | NCT03CH-270 | C CAP | 27P | 50V |
| C28 | NCB21EK-473 | C CAP | 0.047 | 25V |
| C29 | NEA11AM-336 | E CAP | 33 | 10V |
| C30 | NCT03CH-220 | C CAP | 22P | 50V |
| C31 | NCT03CH-100 | C CAP | 10P | 50V |
| C32 | NCT03CH-100 | C CAP | 10P | 50V |
| C33 | NCT03CH-100 | C CAP | 10P | 50V |
| C34 | NCB21EK-473 | C CAP | 0.047 | 25V |
| C35 | NCB21EK-473 | C CAP | 0.047 | 25V |
| C36 | NCB21EK-473 | C CAP | 0.047 | 25V |
| C37 | NEA11EM-106 | E CAP | 10 | 25V |
| C38 | NCB21EK-473 | C CAP | 0.047 | 25V |
| C39 | NCT03CH-100 | C CAP | 10P | 50V |
| C40 | NCB21EK-473 | C CAP | 0.047 | 25V |
| LC1 | SCV1804-222 | EMI FILTER | | |

## 7.2 DR2 board assembly list 0 6
for U version 〈SCK2310-02-N0A〉
for E version 〈SCK2310-02-P0A〉 0 6

| Symbol No. | Part No. | Part Name | Description |
|---|---|---|---|
| CN9 | SCV1814-022 | CONNECTOR | 22PIN |
| CN10 | SCV1770-005 | CONNECTOR | 5PIN |
| CN19 | SCV1770-012 | CONNECTOR | 12PIN |
| CN22 | SCV1770-006 | CONNECTOR | 6PIN |
| CN41 | SCV1770-004 | CONNECTOR | 4PIN |

| Symbol No. | Part No. | Part Name | Description | |
|---|---|---|---|---|
| IC2 | TC7SU04F | I.C.(M) | TOSHIBA | |
| IC3 | UPD9318GB | I.C.(M) | NEC | |
| IC4 | TC7S86F | I.C.(M) | TOSHIBA | |
| IC5 | UPD9421AGK-BE9 | I.C.(M) | NEC | |
| IC6 | TC7S02F | I.C.(M) | TOSHIBA | |
| IC7 | UPD16502GS | I.C.(M) | NEC | |
| IC8 | UPD16502GS | I.C.(M) | NEC | |
| IC9 | UPD16502GS | I.C.(M) | NEC | |
| IC11 | TC7S02F | I.C.(M) | TOSHIBA | |
| IC12 | MC74HC08AF | I.C.(M) | MOTOROLA | |
| Q1 | 2SB766(QR) | TRANSISTOR | MATSUSHITA | |
| Q2 | 2SD874(QR) | TRANSISTOR | MATSUSHITA | |
| Q3 | DTC124EU | TRANSISTOR | ROHM | |
| Q4 | 2SB1219(QR) | TRANSISTOR | | (E) |
| D1 | MA335 | SI DIODE | MATSUSHITA | |
| D2 | MA142ATX | DIODE | MATSUSHITA | |
| D3 | MA142ATX | DIODE | MATSUSHITA | |
| D4 | MA335 | SI DIODE | MATSUSHITA | |
| D5 | MA142ATX | DIODE | MATSUSHITA | |
| R2 | NRSA02J-102 | MGR | 1.0K | 1/10W |
| R3 | NRSA02J-2R2 | MGR | 2.2 | 1/10W |
| R4 | NRSA02J-4R7 | MGR | 4.7 | 1/10W |
| R5 | NRSA02J-4R7 | MGR | 4.7 | 1/10W |
| R6 | NRSA02J-4R7 | MGR | 4.7 | 1/10W |
| R7 | NRSA02J-4R7 | MGR | 4.7 | 1/10W |
| R8 | NRSA02J-4R7 | MGR | 4.7 | 1/10W |
| R9 | NRSA02J-4R7 | MGR | 4.7 | 1/10W |
| R10 | NRSA02J-681 | MGR | 680 | 1/10W |
| R13 | NRSA02J-220 | MGR | 22 | 1/10W |
| R15 | NRSA02J-220 | MGR | 22 | 1/10W |
| R16 | NRSA02J-220 | MGR | 22 | 1/10W |
| R17 | NRSA02J-471 | MGR | 470 | 1/10W |
| R19 | NRSA02J-272 | MGR | 2.7K | 1/10W |
| R20 | NRSA02J-105 | MGR | 1.0M | 1/10W |
| R21 | NRSA02J-102 | MGR | 1.0K | 1/10W |
| R22 | NRSA02J-104 | MGR | 100K | 1/10W |
| R23 | NRSA02J-104 | MGR | 100K | 1/10W |
| R24 | NRSA02J-102 | MGR | 1.0K | 1/10W |
| R25 | NRSA02J-472 | MGR | 4.7K | 1/10W |
| R26 | NRSA02J-0R0 | MGR | 0 | 1/10W(E) |
| R27 | NRSA02J-0R0 | MGR | 0 | 1/10W(U) |
| R30 | NRSA02J-0R0 | MGR | 0 | 1/10W |
| R31 | NRSA02J-472 | MGR | 4.7K | 1/10W |
| R33 | NRSA02J-331 | MGR | 330 | 1/10W |
| R34 | NRSA02J-103 | MGR | 10K | 1/10W |
| R35 | NRSA02J-392 | MGR | 3.9K | 1/10W |
| R36 | NRSA02J-183 | MGR | 18K | 1/10W |
| R37 | NRSA02J-104 | MGR | 100K | 1/10W |
| R38 | NRSA02J-0R0 | MGR | 0 | 1/10W(U) |
| | NRSA02J-103 | MGR | 10K | 1/10W(E) |
| R39 | NRSA02J-392 | MGR | 3.9K | 1/10W |
| R40 | NRSA02J-392 | MGR | 3.9K | 1/10W |
| R41 | NRSA02J-101 | MGR | 100 | 1/10W |
| R42 | NRSA02J-102 | MGR | 1.0K | 1/10W |
| R43 | NRSA02J-102 | MGR | 1.0K | 1/10W |
| R44 | NRSA02J-223 | MGR | 22K | 1/10W |

| Symbol No. | Part No. | Part Name | Description | |
|---|---|---|---|---|
| R45 | NRSA02J-100 | MGR | 10 | 1/10W |
| R46 | NRSA02J-100 | MGR | 10 | 1/10W |
| R47 | NRSA02J-100 | MGR | 10 | 1/10W |
| R50 | NRSA02J-220 | MGR | 22 | 1/10W |
| R51 | NRSA02J-182 | MGR | 1.8K | 1/10W(E) |
| R52 | NRSA02J-183 | MGR | 18K | 1/10W(E) |
| VR1 | NVP1415-203 | TRIM.RESISTOR | 20K | Eoo |
| C1 | NEA10JM-107 | E.CAPACITOR | 100 | 6.3V |
| C2 | NCB21EK-473 | CER.CAPACITOR-M | 0.047 | 25V |
| C4 | NEA11CM-226 | E.CAPACITOR | 22 | 16V |
| C5 | NCB21EK-473 | CER.CAPACITOR-M | 0.047 | 25V |
| C6 | NEA10JM-337 | E.CAPACITOR | 330 | 6.3V |
| C7 | NEA10JM-337 | E.CAPACITOR | 330 | 6.3V |
| C8 | NCB21EK-473 | CER.CAPACITOR-M | 0.047 | 25V |
| C9 | NRSA02J-0R0 | MGR | 0 | 1/10W |
| C10 | NCB21EK-473 | CER.CAPACITOR-M | 0.047 | 25V |
| C11 | NCB21EK-473 | CER.CAPACITOR-M | 0.047 | 25V |
| C12 | NCT03CH-151 | C CAP | 150P | 50V |
| C13 | NCT03CH-151 | C CAP | 150P | 50V |
| C14 | NCB21EK-473 | CER.CAPACITOR-M | 0.047 | 25V |
| C15 | NCB21EK-473 | CER.CAPACITOR-M | 0.047 | 25V |
| C16 | NEF11AM-225 | TA E.CAPACITOR | 2.2 | 10V |
| C17 | NEF11CM-106 | TA E.CAPACITOR | 10 | 16V |
| C19 | NCB21EK-473 | CER.CAPACITOR-M | 0.047 | 25V |
| C20 | NEA10JM-107 | E.CAPACITOR | 100 | 6.3V |
| C21 | NCB21EK-473 | CER.CAPACITOR-M | 0.047 | 25V |
| C22 | NCB21EK-473 | CER.CAPACITOR-M | 0.047 | 25V |
| C23 | NCB21EK-473 | CER.CAPACITOR-M | 0.047 | 25V |
| C24 | NCB21EK-473 | CER.CAPACITOR-M | 0.047 | 25V |
| C26 | NEA11EM-106 | E.CAPACITOR | 10 | 25V |
| C27 | NCB21EK-473 | CER.CAPACITOR-M | 0.047 | 25V |
| C28 | NEA11AM-336 | E.CAPACITOR | 33 | 10V |
| C29 | NEA11AM-336 | E.CAPACITOR | 33 | 10V |
| C30 | NCB21EK-473 | CER.CAPACITOR-M | 0.047 | 25V |
| C31 | NCB21EK-473 | CER.CAPACITOR-M | 0.047 | 25V |
| C32 | NCB21EK-473 | CER.CAPACITOR-M | 0.047 | 25V |
| C33 | NCB21EK-473 | CER.CAPACITOR-M | 0.047 | 25V |
| C34 | NEA11EM-106 | E.CAPACITOR | 10 | 25V |
| C35 | NCB21EK-473 | CER.CAPACITOR-M | 0.047 | 25V |
| C36 | NCB21EK-473 | CER.CAPACITOR-M | 0.047 | 25V |
| C37 | NCB21EK-473 | CER.CAPACITOR-M | 0.047 | 25V |
| C38 | NCB21EK-473 | CER.CAPACITOR-M | 0.047 | 25V |
| C39 | NEA11AM-336 | E.CAPACITOR | 33 | 10V |
| C40 | NEA11AM-336 | E.CAPACITOR | 33 | 10V |
| C41 | NEA10JM-107 | E.CAPACITOR | 100 | 6.3V |
| C42 | NEA10GM-227 | E.CAPACITOR | 220 | 4V |
| C43 | NCB21EK-473 | CER.CAPACITOR-M | 0.047 | 25V |
| C44 | NCB21EK-473 | CER.CAPACITOR-M | 0.047 | 25V |
| C45 | NCB21EK-473 | CER.CAPACITOR-M | 0.047 | 25V |
| C46 | NCB21EK-473 | CER.CAPACITOR-M | 0.047 | 25V |
| C47 | NCB21EK-473 | CER.CAPACITOR-M | 0.047 | 25V |
| C48 | NCB21EK-473 | CER.CAPACITOR-M | 0.047 | 25V |
| C50 | NCB21EK-473 | CER.CAPACITOR-M | 0.047 | 25V |
| C51 | NCB21EK-473 | CER.CAPACITOR-M | 0.047 | 25V |
| C52 | NCT03CH-101 | C CAP | 100P | 50V |

| Symbol No. | Part No. | Part Name | Description |
|---|---|---|---|
| L1 | SCV1950-1R8 | P.COIL | 1.8UH |
| L2 | SSV1330-150 | COIL | 15UH |
| X1 | SCV2005-001 | CRYSTAL | 27MHz |
| CN6 | SCV1770-014 | CONNECTOR | 14PIN |
| CN7 | SCV1770-014 | CONNECTOR | 14PIN |
| CN8 | SCV1770-014 | CONNECTOR | 14PIN |
| CN9 | SCV1815-022 | CONNECTOR | 22PIN |
| CN33 | SCV1770-003 | CONNECTOR | 3PIN |
| TP1 | SSV1096-001 | TEST POINT | |

## 7.3 ISB board assembly list 01
## 〈SCK2310-03-00A〉 01□□□□□□

| Symbol No. | Part No. | Part Name | Description | |
|---|---|---|---|---|
| IC2 | MC-8088A | I.C.(H) | MOTOROLA | |
| Q1 | 2SC3930(BC) | TRANSISTOR | MATSUSHITA | |
| Q3 | 2SA1622(M6) | TRANSISTOR | SANYO | |
| R1 | NRSA02J-474 | M.G.RESISTOR | 470K | 1/10W |
| R2 | NRSA02J-101 | M.G.RESISTOR | 100 | 1/10W |
| R3 | NRSA02J-332 | M.G.RESISTOR | 3.3K | 1/10W |
| R4 | NRSA02J-332 | M.G.RESISTOR | 3.3K | 1/10W |
| R5 | NRSA02J-473 | M.G.RESISTOR | 47K | 1/10W |
| R6 | NRSA02J-273 | M.G.RESISTOR | 27K | 1/10W |
| R7 | NRSA02J-220 | M.G.RESISTOR | 22 | 1/10W |
| R8 | NRSA02J-102 | M.G.RESISTOR | 1.0K | 1/10W |
| R9 | NRSA02J-332 | M.G.RESISTOR | 3.3K | 1/10W |
| R10 | NRSA02J-101 | M.G.RESISTOR | 100 | 1/10W |
| R11 | NRSA02J-152 | M.G.RESISTOR | 1.5K | 1/10W |
| R12 | NRSA02J-220 | M.G.RESISTOR | 22 | 1/10W |
| R13 | NRSA02J-101 | M.G.RESISTOR | 100 | 1/10W |
| C1 | NCB21EK-473 | C CAP | 0.047 | 25V |
| C2 | NCB21HK-103 | C CAP | 0.010 | 50V |
| C3 | NCB21EK-473 | C CAP | 0.047 | 25V |
| C4 | NEF11EM-475 | T CAP | 4.7 | 25V |
| C5 | NCB21EK-473 | C CAP | 0.047 | 25V |
| C6 | NEF11EM-475 | T CAP | 4.7 | 25V |
| C7 | NEF11CM-106 | TA E.CAP | 10 | 16V |
| C8 | NCB21EK-473 | C CAP | 0.047 | 25V |
| C9 | NEF11AM-156 | TA E.CAP | 15 | 10V |
| C11 | NEF11AM-156 | TA E.CAP | 15 | 10V |
| C12 | NCB21EK-473 | C CAP | 0.047 | 25V |
| CN3 | SCV1770-003 | CONNECTOR | 3PIN | |
| CN6 | SCV1770-014 | CONNECTOR | 14PIN | |
| TP1 | SSV1096-001 | TEST POINT | | |

## 7.4 ISG board assembly list 02
## 〈SCK2310-04-00A〉 02□□□□□□

| Symbol No. | Part No. | Part Name | Description | |
|---|---|---|---|---|
| IC2 | MC-8088A | I.C.(H) | MOTOROLA | |
| Q1 | 2SC3930(BC) | TRANSISTOR | MATSUSHITA | |
| Q2 | 3SK157 | F.E.T. | NEC | |
| Q3 | 2SA1622(M6) | TRANSISTOR | SANYO | |
| R1 | NRSA02J-474 | M.G.RESISTOR | 470K | 1/10W |
| R2 | NRSA02J-101 | M.G.RESISTOR | 100 | 1/10W |
| R3 | NRSA02J-332 | M.G.RESISTOR | 3.3K | 1/10W |
| R4 | NRSA02J-332 | M.G.RESISTOR | 3.3K | 1/10W |
| R5 | NRSA02J-473 | M.G.RESISTOR | 47K | 1/10W |
| R6 | NRSA02J-273 | M.G.RESISTOR | 27K | 1/10W |
| R7 | NRSA02J-220 | M.G.RESISTOR | 22 | 1/10W |
| R8 | NRSA02J-102 | M.G.RESISTOR | 1.0K | 1/10W |
| R9 | NRSA02J-332 | M.G.RESISTOR | 3.3K | 1/10W |
| R10 | NRSA02J-101 | M.G.RESISTOR | 100 | 1/10W |
| R11 | NRSA02J-152 | M.G.RESISTOR | 1.5K | 1/10W |
| R12 | NRSA02J-220 | M.G.RESISTOR | 22 | 1/10W |
| R13 | NRSA02J-101 | M.G.RESISTOR | 100 | 1/10W |
| C1 | NCB21EK-473 | C CAP | 0.047 | 25V |
| C2 | NCB21HK-103 | C CAP | 0.010 | 50V |
| C3 | NCB21EK-473 | C CAP | 0.047 | 25V |
| C4 | NEF11EM-475 | T CAP | 4.7 | 25V |
| C5 | NCB21EK-473 | C CAP | 0.047 | 25V |
| C6 | NEF11EM-475 | T CAP | 4.7 | 25V |
| C7 | NEF11CM-106 | TA E.CAP | 10 | 16V |
| C8 | NCB21EK-473 | C CAP | 0.047 | 25V |
| C9 | NEF11AM-156 | TA E.CAP | 15 | 10V |
| C10 | NCT03CH-330 | C CAP | 33P | 50V |
| C11 | NEF11AM-156 | TA E.CAP | 15 | 10V |
| C12 | NCB21EK-473 | C CAP | 0.047 | 25V |
| CN4 | SCV1770-003 | CONNECTOR | 3PIN | |
| CN7 | SCV1770-014 | CONNECTOR | 14PIN | |
| TP1 | SSV1096-001 | TEST POINT | | |

## 7.5 ISR board assembly list 03
## 〈SCK2310-05-00A〉 03□□□□□□

| Symbol No. | Part No. | Part Name | Description | |
|---|---|---|---|---|
| IC2 | MC-8088A | I.C.(H) | MOTOROLA | |
| Q1 | 2SC3930(BC) | TRANSISTOR | MATSUSHITA | |
| Q3 | 2SA1622(M6) | TRANSISTOR | SANYO | |
| R1 | NRSA02J-474 | M.G.RESISTOR | 470K | 1/10W |
| R2 | NRSA02J-101 | M.G.RESISTOR | 100 | 1/10W |
| R3 | NRSA02J-332 | M.G.RESISTOR | 3.3K | 1/10W |
| R4 | NRSA02J-332 | M.G.RESISTOR | 3.3K | 1/10W |
| R5 | NRSA02J-473 | M.G.RESISTOR | 47K | 1/10W |
| R6 | NRSA02J-273 | M.G.RESISTOR | 27K | 1/10W |
| R7 | NRSA02J-220 | M.G.RESISTOR | 22 | 1/10W |
| R8 | NRSA02J-102 | M.G.RESISTOR | 1.0K | 1/10W |
| R9 | NRSA02J-332 | M.G.RESISTOR | 3.3K | 1/10W |
| R10 | NRSA02J-101 | M.G.RESISTOR | 100 | 1/10W |
| R11 | NRSA02J-152 | M.G.RESISTOR | 1.5K | 1/10W |
| R12 | NRSA02J-220 | M.G.RESISTOR | 22 | 1/10W |
| R13 | NRSA02J-101 | M.G.RESISTOR | 100 | 1/10W |
| C1 | NCB21EK-473 | C CAP | 0.047 | 25V |
| C2 | NCB21HK-103 | C CAP | 0.010 | 50V |
| C3 | NCB21EK-473 | C CAP | 0.047 | 25V |
| C4 | NEF11EM-475 | T CAP | 4.7 | 25V |
| C5 | NCB21EK-473 | C CAP | 0.047 | 25V |
| C6 | NEF11EM-475 | T CAP | 4.7 | 25V |
| C7 | NEF11CM-106 | TA E.CAP | 10 | 16V |
| C8 | NCB21EK-473 | C CAP | 0.047 | 25V |
| C9 | NEF11AM-156 | TA E.CAP | 15 | 10V |
| C11 | NEF11AM-156 | TA E.CAP | 15 | 10V |
| C12 | NCB21EK-473 | C CAP | 0.047 | 25V |
| CN5 | SCV1770-003 | CONNECTOR | 3PIN | |
| CN8 | SCV1770-014 | CONNECTOR | 14PIN | |
| TP1 | SSV1096-001 | TEST POINT | | |

## 7.6 PA board assembly list 04
## 〈SCK2310-06-00A〉 04□□□□□□

| Symbol No. | Part No. | Part Name | Description | |
|---|---|---|---|---|
| IC1 | RC062M | I.C.(M) | JRC | |
| IC2 | RC062M | I.C.(M) | JRC | |
| IC3 | RC062M | I.C.(M) | JRC | |
| IC4 | MC74HC4053F | I.C.(M) | MOTOROLA | |
| IC5 | TC4S69F | I.C.(M) | TOSHIBA | |
| IC6 | TC4S69F | I.C.(M) | TOSHIBA | |
| Q1 | 2SK662(QR) | FET | MATSUSHITA | |
| Q2 | 2SC3932(ST) | TRANSISTOR | MATSUSHITA | |
| Q3 | 2SC3930(BC) | TRANSISTOR | MATSUSHITA | |
| Q4 | 2SK662(QR) | FET | MATSUSHITA | |
| Q5 | 2SA1532(BC) | TRANSISTOR | MATSUSHITA | |
| Q6 | 2SK662(QR) | FET | MATSUSHITA | |
| Q7 | 2SC3932(ST) | TRANSISTOR | MATSUSHITA | |
| Q8 | 2SC3930(BC) | TRANSISTOR | MATSUSHITA | |
| Q9 | 2SK662(QR) | FET | MATSUSHITA | |
| Q10 | 2SA1532(BC) | TRANSISTOR | MATSUSHITA | |
| Q11 | 2SK662(QR) | FET | MATSUSHITA | |
| Q12 | 2SC3932(ST) | TRANSISTOR | MATSUSHITA | |
| Q13 | 2SC3930(BC) | TRANSISTOR | MATSUSHITA | |
| Q14 | 2SK662(QR) | FET | MATSUSHITA | |
| Q15 | 2SA1532(BC) | TRANSISTOR | MATSUSHITA | |
| Q16 | 2SK662(QR) | FET | MATSUSHITA | |
| Q17 | 2SC3930(BC) | TRANSISTOR | MATSUSHITA | |
| Q18 | 2SK662(QR) | FET | MATSUSHITA | |
| Q19 | 2SC3930(BC) | TRANSISTOR | MATSUSHITA | |
| Q20 | 2SK662(QR) | FET | MATSUSHITA | |
| Q21 | 2SC3930(BC) | TRANSISTOR | MATSUSHITA | |
| R2 | NRSA02J-333 | M.G.RESISTOR | 33K | 1/10W |
| R3 | NRSA02J-102 | M.G.RESISTOR | 1.0K | 1/10W |
| R4 | NRSA02J-102 | M.G.RESISTOR | 1.0K | 1/10W |
| R5 | NRSA02J-472 | M.G.RESISTOR | 4.7K | 1/10W |
| R6 | NRSA02J-472 | M.G.RESISTOR | 4.7K | 1/10W |
| R7 | NRSA02J-681 | M.G.RESISTOR | 680 | 1/10W |
| R8 | NRSA02J-222 | M.G.RESISTOR | 2.2K | 1/10W |
| R9 | NRSA02J-392 | M.G.RESISTOR | 3.9K | 1/10W |
| R10 | NRSA02J-333 | M.G.RESISTOR | 33K | 1/10W |
| R11 | NRSA02J-473 | M.G.RESISTOR | 47K | 1/10W |
| R12 | NRSA02J-101 | M.G.RESISTOR | 100 | 1/10W |
| R13 | NRSA02J-392 | M.G.RESISTOR | 3.9K | 1/10W |
| R14 | NRSA02J-0R0 | M.G.RESISTOR | 0 | 1/10W |
| R15 | NRSA02J-564 | M.G.RESISTOR | 560K | 1/10W |
| R16 | NRSA02J-564 | M.G.RESISTOR | 560K | 1/10W |
| R18 | NRSA02J-333 | M.G.RESISTOR | 33K | 1/10W |
| R19 | NRSA02J-102 | M.G.RESISTOR | 1.0K | 1/10W |
| R20 | NRSA02J-102 | M.G.RESISTOR | 1.0K | 1/10W |
| R21 | NRSA02J-472 | M.G.RESISTOR | 4.7K | 1/10W |
| R22 | NRSA02J-472 | M.G.RESISTOR | 4.7K | 1/10W |
| R23 | NRSA02J-822 | M.G.RESISTOR | 8.2K | 1/10W |
| R24 | NRSA02J-681 | M.G.RESISTOR | 680 | 1/10W |
| R25 | NRSA02J-222 | M.G.RESISTOR | 2.2K | 1/10W |
| R26 | NRSA02J-392 | M.G.RESISTOR | 3.9K | 1/10W |
| R27 | NRSA02J-333 | M.G.RESISTOR | 33K | 1/10W |
| R28 | NRSA02J-473 | M.G.RESISTOR | 47K | 1/10W |
| R29 | NRSA02J-101 | M.G.RESISTOR | 100 | 1/10W |
| R30 | NRSA02J-392 | M.G.RESISTOR | 3.9K | 1/10W |
| R32 | NRSA02J-564 | M.G.RESISTOR | 560K | 1/10W |
| R33 | NRSA02J-564 | M.G.RESISTOR | 560K | 1/10W |

| Symbol No. | Part No. | Part Name | Description | |
|---|---|---|---|---|
| R35 | NRSA02J-333 | M.G.RESISTOR | 33K | 1/10W |
| R36 | NRSA02J-102 | M.G.RESISTOR | 1.0K | 1/10W |
| R37 | NRSA02J-102 | M.G.RESISTOR | 1.0K | 1/10W |
| R38 | NRSA02J-472 | M.G.RESISTOR | 4.7K | 1/10W |
| R39 | NRSA02J-472 | M.G.RESISTOR | 4.7K | 1/10W |
| R40 | NRSA02J-822 | M.G.RESISTOR | 8.2K | 1/10W |
| R41 | NRSA02J-681 | M.G.RESISTOR | 680 | 1/10W |
| R42 | NRSA02J-222 | M.G.RESISTOR | 2.2K | 1/10W |
| R43 | NRSA02J-392 | M.G.RESISTOR | 3.9K | 1/10W |
| R44 | NRSA02J-333 | M.G.RESISTOR | 33K | 1/10W |
| R45 | NRSA02J-473 | M.G.RESISTOR | 47K | 1/10W |
| R46 | NRSA02J-101 | M.G.RESISTOR | 100 | 1/10W |
| R47 | NRSA02J-333 | M.G.RESISTOR | 33K | 1/10W |
| R48 | NRSA02J-392 | M.G.RESISTOR | 3.9K | 1/10W |
| R49 | NRSA02J-564 | M.G.RESISTOR | 560K | 1/10W |
| R50 | NRSA02J-564 | M.G.RESISTOR | 560K | 1/10W |
| R51 | NRSA02J-0R0 | M.G.RESISTOR | 0 | 1/10W |
| R52 | NRSA02J-101 | M.G.RESISTOR | 100 | 1/10W |
| R53 | NRSA02J-101 | M.G.RESISTOR | 100 | 1/10W |
| R54 | NRSA02J-101 | M.G.RESISTOR | 100 | 1/10W |
| R55 | NRSA02J-103 | M.G.RESISTOR | 10K | 1/10W |
| R56 | NRSA02J-102 | M.G.RESISTOR | 1.0K | 1/10W |
| R57 | NRSA02J-683 | M.G.RESISTOR | 68K | 1/10W |
| R58 | NRSA02J-333 | M.G.RESISTOR | 33K | 1/10W |
| R59 | NRSA02J-392 | M.G.RESISTOR | 3.9K | 1/10W |
| R60 | NRSA02J-102 | M.G.RESISTOR | 1.0K | 1/10W |
| R61 | NRSA02J-683 | M.G.RESISTOR | 68K | 1/10W |
| R62 | NRSA02J-333 | M.G.RESISTOR | 33K | 1/10W |
| R63 | NRSA02J-392 | M.G.RESISTOR | 3.9K | 1/10W |
| R64 | NRSA02J-102 | M.G.RESISTOR | 1.0K | 1/10W |
| R65 | NRSA02J-683 | M.G.RESISTOR | 68K | 1/10W |
| R66 | NRSA02J-333 | M.G.RESISTOR | 33K | 1/10W |
| R67 | NRSA02J-392 | M.G.RESISTOR | 3.9K | 1/10W |
| VR1 | NVP1416-503 | V RESISTOR | 50K | B BLACK |
| VR2 | NVP1416-503 | V RESISTOR | 50K | G BLACK |
| VR3 | NVP1416-503 | V RESISTOR | 50K | R BLACK |
| C1 | NCF21EZ-104 | C CAP | 0.10 | 25V |
| C2 | NCF21EZ-104 | C CAP | 0.10 | 25V |
| C3 | NCT03CH-220 | C CAP | 22P | 50V |
| C4 | NCF21EZ-104 | C CAP | 0.10 | 25V |
| C5 | NEN11HM-105 | NP E CAP | 1.0 | 50V |
| C6 | NCF21EZ-104 | C CAP | 0.10 | 25V |
| C7 | NEN11HM-105 | NP E CAP | 1.0 | 50V |
| C8 | NCT03CH-470 | C CAP | 47P | 50V |
| C9 | NCT03CH-820 | C CAP | 82P | 50V |
| C10 | NEA11AM-336 | E CAP | 33 | 10V |
| C11 | NCF21EZ-104 | C CAP | 0.10 | 25V |
| C12 | NCF21EZ-104 | C CAP | 0.10 | 25V |
| C13 | NCF21EZ-104 | C CAP | 0.10 | 25V |
| C14 | NCT03CH-120 | C CAP | 12P | 50V |
| C15 | NCF21EZ-104 | C CAP | 0.10 | 25V |
| C16 | NEN11HM-105 | NP E CAP | 1.0 | 50V |
| C17 | NCF21EZ-104 | C CAP | 0.10 | 25V |
| C18 | NEN11HM-105 | NP E CAP | 1.0 | 50V |
| C19 | NCT03CH-470 | C CAP | 47P | 50V |
| C20 | NCT03CH-820 | C CAP | 82P | 50V |

| Symbol No. | Part No. | Part Name | Description | |
|---|---|---|---|---|
| C21 | NEA11AM-336 | E CAP | 33 | 10V |
| C22 | NCF21EZ-104 | C CAP | 0.10 | 25V |
| C23 | NCF21EZ-104 | C CAP | 0.10 | 25V |
| C24 | NCF21EZ-104 | C CAP | 0.10 | 25V |
| C25 | NCT03CH-120 | C CAP | 12P | 50V |
| C26 | NCF21EZ-104 | C CAP | 0.10 | 25V |
| C27 | NEN11HM-105 | NP E CAP | 1.0 | 50V |
| C28 | NCF21EZ-104 | C CAP | 0.10 | 25V |
| C29 | NEN11HM-105 | NP E CAP | 1.0 | 50V |
| C30 | NCT03CH-470 | C CAP | 47P | 50V |
| C31 | NCT03CH-820 | C CAP | 82P | 50V |
| C32 | NEA11AM-336 | E CAP | 33 | 10V |
| C33 | NCF21EZ-104 | C CAP | 0.10 | 25V |
| C34 | NEA10JM-337 | E CAP | 330 | 6.3V |
| C35 | NEA10JM-107 | E CAP | 100 | 6.3V |
| C36 | NCF21EZ-104 | C CAP | 0.10 | 25V |
| C37 | NEA10JM-107 | E CAP | 100 | 6.3V |
| C38 | NCF21EZ-104 | C CAP | 0.10 | 25V |
| C39 | NCF21EZ-104 | C CAP | 0.10 | 25V |
| C40 | NCF21EZ-104 | C CAP | 0.10 | 25V |
| C41 | NCF21EZ-104 | C CAP | 0.10 | 25V |
| C45 | NCT03CH-120 | C CAP | 12P | 50V |
| LC1 | SCV1859-001 | LOW PASS FILTER | 10MHz | |
| LC2 | SCV1859-001 | LOW PASS FILTER | 10MHz | |
| LC3 | SCV1859-001 | LOW PASS FILTER | 10MHz | |
| LC4 | SCV1562-001 | LOW PASS FILTER | 3MHz | |
| LC5 | SCV1562-001 | LOW PASS FILTER | 3MHz | |
| LC6 | SCV1562-001 | LOW PASS FILTER | 3MHz | |
| CN3 | SCV1770-003 | CONNECTOR | 3PIN | |
| CN4 | SCV1770-003 | CONNECTOR | 3PIN | |
| CN5 | SCV1770-003 | CONNECTOR | 3PIN | |
| CN21 | SCV1770-010 | CONNECTOR | 10PIN | |
| CN41 | SCV1770-004 | CONNECTOR | 4PIN | |

## 7.7 PR1 board assembly list 07
## 〈SCK2307-03-00A〉

07□□□□□□□

| Symbol No. | Part No. | Part Name | Description |
|---|---|---|---|
| IC1 | RC062M | I.C.(M) | JRC |
| IC2 | RC062M | I.C.(M) | JRC |
| IC3 | RC1496M | I.C.(M) | RAYTHEON |
| IC4 | RC062M | I.C.(M) | JRC |
| IC5 | RC062M | I.C.(M) | JRC |
| IC6 | RC062M | I.C.(M) | JRC |
| IC7 | RC1496M | I.C.(M) | RAYTHEON |
| IC8 | RC062M | I.C.(M) | JRC |
| IC9 | RC062M | I.C.(M) | JRC |
| IC10 | RC062M | I.C.(M) | JRC |
| IC11 | RC1496M | I.C.(M) | RAYTHEON |
| IC12 | RC062M | I.C.(M) | JRC |
| IC13 | RC2902M | I.C.(M) | RAYTHEON |
| IC14 | MB88342PF | I.C.(M) | FUJITSU |
| IC15 | TC4S69F | I.C.(M) | TOSHIBA |
| Q2 | 2SD1820(QR) | TRANSISTOR | MATSUSHITA |
| Q3 | 2SC3930(BC) | TRANSISTOR | MATSUSHITA |
| Q4 | 2SC3930(BC) | TRANSISTOR | MATSUSHITA |
| Q5 | 2SC3930(BC) | TRANSISTOR | MATSUSHITA |
| Q6 | 2SK662(QR) | FET | MATSUSHITA |
| Q7 | 2SC3930(BC) | TRANSISTOR | MATSUSHITA |
| Q8 | CXD7500M | F.E.T. | SONY |
| Q9 | 2SC3930(BC) | TRANSISTOR | MATSUSHITA |
| Q11 | 2SD1820(QR) | TRANSISTOR | MATSUSHITA |
| Q12 | 2SC3930(BC) | TRANSISTOR | MATSUSHITA |
| Q13 | 2SC3930(BC) | TRANSISTOR | MATSUSHITA |
| Q14 | 2SC3930(BC) | TRANSISTOR | MATSUSHITA |
| Q15 | 2SK662(QR) | FET | MATSUSHITA |
| Q16 | 2SC3930(BC) | TRANSISTOR | MATSUSHITA |
| Q17 | CXD7500M | F.E.T. | SONY |
| Q18 | 2SC3930(BC) | TRANSISTOR | MATSUSHITA |
| Q20 | 2SD1820(QR) | TRANSISTOR | MATSUSHITA |
| Q21 | 2SC3930(BC) | TRANSISTOR | MATSUSHITA |
| Q22 | 2SC3930(BC) | TRANSISTOR | MATSUSHITA |
| Q23 | 2SC3930(BC) | TRANSISTOR | MATSUSHITA |
| Q24 | 2SK662(QR) | FET | MATSUSHITA |
| Q25 | 2SC3930(BC) | TRANSISTOR | MATSUSHITA |
| Q26 | CXD7500M | F.E.T. | SONY |
| Q27 | 2SC3930(BC) | TRANSISTOR | MATSUSHITA |
| Q28 | 2SC3930(BC) | TRANSISTOR | MATSUSHITA |
| Q29 | 2SC3930(BC) | TRANSISTOR | MATSUSHITA |
| Q30 | 2SD1820(QR) | TRANSISTOR | MATSUSHITA |
| Q31 | 2SD1820(QR) | TRANSISTOR | MATSUSHITA |
| Q32 | 2SC3930(BC) | TRANSISTOR | MATSUSHITA |
| Q33 | 2SC3930(BC) | TRANSISTOR | MATSUSHITA |
| Q34 | 2SB1219(QR) | TRANSISTOR | MATSUSHITA |
| Q35 | 2SC3930(BC) | TRANSISTOR | MATSUSHITA |
| Q36 | 2SB1219(QR) | TRANSISTOR | MATSUSHITA |
| Q37 | 2SK662(QR) | FET | MATSUSHITA |
| Q38 | 2SK662(QR) | FET | MATSUSHITA |
| Q39 | 2SK662(QR) | FET | MATSUSHITA |
| Q40 | 2SA1532(BC) | TRANSISTOR | MATSUSHITA |
| Q41 | 2SA1532(BC) | TRANSISTOR | MATSUSHITA |
| Q42 | 2SA1532(BC) | TRANSISTOR | MATSUSHITA |
| Q43 | 2SA1622(M6) | TRANSISTOR | SANYO |
| Q44 | 2SA1622(M6) | TRANSISTOR | SANYO |
| Q45 | 2SA1622(M6) | TRANSISTOR | SANYO |
| Q46 | 2SC3930(BC) | TRANSISTOR | MATSUSHITA |

| Symbol No. | Part No. | Part Name | Description | |
|---|---|---|---|---|
| D1 | MA142A | SI DIODE | MATSUSHITA | |
| D2 | MA142A | SI DIODE | MATSUSHITA | |
| D3 | MA142A | SI DIODE | MATSUSHITA | |
| R1 | NRSA02J-330 | M.G.RESISTOR | 33 | 1/10W |
| R2 | NRSA02J-471 | M.G.RESISTOR | 470 | 1/10W |
| R4 | NRSA02J-101 | M.G.RESISTOR | 100 | 1/10W |
| R5 | NRSA02J-472 | M.G.RESISTOR | 4.7K | 1/10W |
| R6 | NRSA02J-101 | M.G.RESISTOR | 100 | 1/10W |
| R7 | NRSA02J-392 | M.G.RESISTOR | 3.9K | 1/10W |
| R8 | NRSA02J-103 | M.G.RESISTOR | 10K | 1/10W |
| R9 | NRSA02J-472 | M.G.RESISTOR | 4.7K | 1/10W |
| R10 | NRSA02J-102 | M.G.RESISTOR | 1.0K | 1/10W |
| R11 | NRSA02J-472 | M.G.RESISTOR | 4.7K | 1/10W |
| R12 | NRSA02J-471 | M.G.RESISTOR | 470 | 1/10W |
| R13 | NRSA02J-333 | M.G.RESISTOR | 33K | 1/10W |
| R14 | NRSA02J-183 | M.G.RESISTOR | 18K | 1/10W |
| R15 | NRSA02J-222 | M.G.RESISTOR | 2.2K | 1/10W |
| R16 | NRSA02J-392 | M.G.RESISTOR | 3.9K | 1/10W |
| R17 | NRSA02J-105 | M.G.RESISTOR | 1.0M | 1/10W |
| R19 | NRVA02D-332 | M.F.RESISTOR | 3.3K | 1/10W |
| R20 | NRSA02J-103 | M.G.RESISTOR | 10K | 1/10W |
| R21 | NRSA02J-103 | M.G.RESISTOR | 10K | 1/10W |
| R22 | NRSA02J-473 | M.G.RESISTOR | 47K | 1/10W |
| R23 | NRSA02J-393 | M.G.RESISTOR | 39K | 1/10W |
| R24 | NRSA02J-101 | M.G.RESISTOR | 100 | 1/10W |
| R25 | NRSA02J-101 | M.G.RESISTOR | 100 | 1/10W |
| R26 | NRSA02J-392 | M.G.RESISTOR | 3.9K | 1/10W |
| R27 | NRSA02J-272 | M.G.RESISTOR | 2.7K | 1/10W |
| R28 | NRSA02J-221 | M.G.RESISTOR | 220 | 1/10W |
| R29 | NRSA02J-222 | M.G.RESISTOR | 2.2K | 1/10W |
| R30 | NRSA02J-104 | M.G.RESISTOR | 100K | 1/10W |
| R31 | NRSA02J-333 | M.G.RESISTOR | 33K | 1/10W |
| R32 | NRSA02J-272 | M.G.RESISTOR | 2.7K | 1/10W |
| R33 | NRSA02J-102 | M.G.RESISTOR | 1.0K | 1/10W |
| R34 | NRSA02J-101 | M.G.RESISTOR | 100 | 1/10W |
| R35 | NRVA02D-333 | M.F.RESISTOR | 33K | 1/10W |
| R36 | NRVA02D-183 | M.F.RESISTOR | 18K | 1/10W |
| R39 | NRSA02J-101 | M.G.RESISTOR | 100 | 1/10W |
| R40 | NRSA02J-472 | M.G.RESISTOR | 4.7K | 1/10W |
| R41 | NRSA02J-101 | M.G.RESISTOR | 100 | 1/10W |
| R42 | NRSA02J-392 | M.G.RESISTOR | 3.9K | 1/10W |
| R43 | NRSA02J-103 | M.G.RESISTOR | 10K | 1/10W |
| R44 | NRSA02J-472 | M.G.RESISTOR | 4.7K | 1/10W |
| R45 | NRSA02J-102 | M.G.RESISTOR | 1.0K | 1/10W |
| R46 | NRSA02J-472 | M.G.RESISTOR | 4.7K | 1/10W |
| R47 | NRSA02J-471 | M.G.RESISTOR | 470 | 1/10W |
| R48 | NRSA02J-333 | M.G.RESISTOR | 33K | 1/10W |
| R49 | NRSA02J-183 | M.G.RESISTOR | 18K | 1/10W |
| R50 | NRSA02J-222 | M.G.RESISTOR | 2.2K | 1/10W |
| R51 | NRSA02J-392 | M.G.RESISTOR | 3.9K | 1/10W |
| R52 | NRSA02J-105 | M.G.RESISTOR | 1.0M | 1/10W |
| R54 | NRVA02D-332 | M.F.RESISTOR | 3.3K | 1/10W |
| R55 | NRSA02J-103 | M.G.RESISTOR | 10K | 1/10W |
| R56 | NRSA02J-103 | M.G.RESISTOR | 10K | 1/10W |
| R57 | NRSA02J-473 | M.G.RESISTOR | 47K | 1/10W |
| R58 | NRSA02J-393 | M.G.RESISTOR | 39K | 1/10W |
| R61 | NRSA02J-101 | M.G.RESISTOR | 100 | 1/10W |
| R62 | NRSA02J-101 | M.G.RESISTOR | 100 | 1/10W |

| Symbol No. | Part No. | Part Name | Description | |
|---|---|---|---|---|
| R63 | NRSA02J-392 | M.G.RESISTOR | 3.9K | 1/10W |
| R64 | NRSA02J-272 | M.G.RESISTOR | 2.7K | 1/10W |
| R65 | NRSA02J-221 | M.G.RESISTOR | 220 | 1/10W |
| R66 | NRSA02J-222 | M.G.RESISTOR | 2.2K | 1/10W |
| R67 | NRSA02J-272 | M.G.RESISTOR | 2.7K | 1/10W |
| R68 | NRSA02J-102 | M.G.RESISTOR | 1.0K | 1/10W |
| R69 | NRVA02D-333 | M.F.RESISTOR | 33K | 1/10W |
| R70 | NRVA02D-183 | M.F.RESISTOR | 18K | 1/10W |
| R71 | NRSA02J-332 | M.G.RESISTOR | 3.3K | 1/10W |
| R74 | NRSA02J-101 | M.G.RESISTOR | 100 | 1/10W |
| R75 | NRSA02J-472 | M.G.RESISTOR | 4.7K | 1/10W |
| R76 | NRSA02J-101 | M.G.RESISTOR | 100 | 1/10W |
| R77 | NRSA02J-392 | M.G.RESISTOR | 3.9K | 1/10W |
| R78 | NRSA02J-103 | M.G.RESISTOR | 10K | 1/10W |
| R79 | NRSA02J-472 | M.G.RESISTOR | 4.7K | 1/10W |
| R80 | NRSA02J-102 | M.G.RESISTOR | 1.0K | 1/10W |
| R81 | NRSA02J-472 | M.G.RESISTOR | 4.7K | 1/10W |
| R82 | NRSA02J-471 | M.G.RESISTOR | 470 | 1/10W |
| R83 | NRSA02J-333 | M.G.RESISTOR | 33K | 1/10W |
| R84 | NRSA02J-183 | M.G.RESISTOR | 18K | 1/10W |
| R85 | NRSA02J-222 | M.G.RESISTOR | 2.2K | 1/10W |
| R86 | NRSA02J-392 | M.G.RESISTOR | 3.9K | 1/10W |
| R87 | NRSA02J-105 | M.G.RESISTOR | 1.0M | 1/10W |
| R89 | NRVA02D-332 | M.F.RESISTOR | 3.3K | 1/10W |
| R90 | NRSA02J-103 | M.G.RESISTOR | 10K | 1/10W |
| R91 | NRSA02J-103 | M.G.RESISTOR | 10K | 1/10W |
| R92 | NRSA02J-473 | M.G.RESISTOR | 47K | 1/10W |
| R93 | NRSA02J-393 | M.G.RESISTOR | 39K | 1/10W |
| R94 | NRSA02J-101 | M.G.RESISTOR | 100 | 1/10W |
| R95 | NRSA02J-101 | M.G.RESISTOR | 100 | 1/10W |
| R96 | NRSA02J-392 | M.G.RESISTOR | 3.9K | 1/10W |
| R97 | NRSA02J-272 | M.G.RESISTOR | 2.7K | 1/10W |
| R98 | NRSA02J-221 | M.G.RESISTOR | 220 | 1/10W |
| R99 | NRSA02J-222 | M.G.RESISTOR | 2.2K | 1/10W |
| R100 | NRSA02J-104 | M.G.RESISTOR | 100K | 1/10W |
| R101 | NRSA02J-333 | M.G.RESISTOR | 33K | 1/10W |
| R102 | NRSA02J-272 | M.G.RESISTOR | 2.7K | 1/10W |
| R103 | NRSA02J-102 | M.G.RESISTOR | 1.0K | 1/10W |
| R104 | NRSA02J-101 | M.G.RESISTOR | 100 | 1/10W |
| R105 | NRVA02D-333 | M.F.RESISTOR | 33K | 1/10W |
| R106 | NRVA02D-183 | M.F.RESISTOR | 18K | 1/10W |
| R107 | NRSA02J-332 | M.G.RESISTOR | 3.3K | 1/10W |
| R109 | NRSA02J-0R0 | M.G.RESISTOR | 0 | 1/10W |
| R110 | NRSA02J-222 | M.G.RESISTOR | 2.2K | 1/10W |
| R111 | NRSA02J-222 | M.G.RESISTOR | 2.2K | 1/10W |
| R112 | NRSA02J-223 | M.G.RESISTOR | 22K | 1/10W |
| R113 | NRSA02J-223 | M.G.RESISTOR | 22K | 1/10W |
| R114 | NRSA02J-222 | M.G.RESISTOR | 2.2K | 1/10W |
| R115 | NRSA02J-222 | M.G.RESISTOR | 2.2K | 1/10W |
| R116 | NRSA02J-154 | M.G.RESISTOR | 150K | 1/10W |
| R117 | NRSA02J-223 | M.G.RESISTOR | 22K | 1/10W |
| R118 | NRSA02J-104 | M.G.RESISTOR | 100K | 1/10W |
| R119 | NRSA02J-104 | M.G.RESISTOR | 100K | 1/10W |
| R120 | NRSA02J-222 | M.G.RESISTOR | 2.2K | 1/10W |
| R121 | NRSA02J-222 | M.G.RESISTOR | 2.2K | 1/10W |
| R122 | NRSA02J-273 | M.G.RESISTOR | 27K | 1/10W |
| R123 | NRSA02J-103 | M.G.RESISTOR | 10K | 1/10W |
| R125 | NRSA02J-272 | M.G.RESISTOR | 2.7K | 1/10W |
| R126 | NRSA02J-103 | M.G.RESISTOR | 10K | 1/10W |

| Symbol No. | Part No. | Part Name | Description | |
|---|---|---|---|---|
| R127 | NRSA02J-101 | M.G.RESISTOR | 100 | 1/10W |
| R128 | NRSA02J-101 | M.G.RESISTOR | 100 | 1/10W |
| R129 | NRSA02J-101 | M.G.RESISTOR | 100 | 1/10W |
| R130 | NRSA02J-104 | M.G.RESISTOR | 100K | 1/10W |
| R131 | NRSA02J-104 | M.G.RESISTOR | 100K | 1/10W |
| R132 | NRSA02J-104 | M.G.RESISTOR | 100K | 1/10W |
| R133 | NRSA02J-472 | M.G.RESISTOR | 4.7K | 1/10W |
| R134 | NRSA02J-472 | M.G.RESISTOR | 4.7K | 1/10W |
| R135 | NRSA02J-472 | M.G.RESISTOR | 4.7K | 1/10W |
| R136 | NRSA02J-101 | M.G.RESISTOR | 100 | 1/10W |
| R137 | NRSA02J-561 | M.G.RESISTOR | 560 | 1/10W |
| R138 | NRSA02J-102 | M.G.RESISTOR | 1.0K | 1/10W |
| R139 | NRSA02J-104 | M.G.RESISTOR | 100K | 1/10W |
| R140 | NRSA02J-103 | M.G.RESISTOR | 10K | 1/10W |
| R141 | NRSA02J-122 | M.G.RESISTOR | 1.2K | 1/10W |
| R143 | NRSA02J-332 | M.G.RESISTOR | 3.3K | 1/10W |
| R144 | NRSA02J-101 | M.G.RESISTOR | 100 | 1/10W |
| R145 | NRSA02J-561 | M.G.RESISTOR | 560 | 1/10W |
| R146 | NRSA02J-102 | M.G.RESISTOR | 1.0K | 1/10W |
| R147 | NRSA02J-104 | M.G.RESISTOR | 100K | 1/10W |
| R148 | NRSA02J-103 | M.G.RESISTOR | 10K | 1/10W |
| R149 | NRSA02J-122 | M.G.RESISTOR | 1.2K | 1/10W |
| R151 | NRSA02J-332 | M.G.RESISTOR | 3.3K | 1/10W |
| R152 | NRSA02J-332 | M.G.RESISTOR | 3.3K | 1/10W |
| R153 | NRSA02J-0R0 | M.G.RESISTOR | 0 | 1/10W |
| R154 | NRSA02J-0R0 | M.G.RESISTOR | 0 | 1/10W |
| R155 | NRSA02J-101 | M.G.RESISTOR | 100 | 1/10W |
| R156 | NRSA02J-101 | M.G.RESISTOR | 100 | 1/10W |
| R157 | NRSA02J-101 | M.G.RESISTOR | 100 | 1/10W |
| R158 | NRSA02J-102 | M.G.RESISTOR | 1.0K | 1/10W |
| R159 | NRSA02J-102 | M.G.RESISTOR | 1.0K | 1/10W |
| R160 | NRSA02J-102 | M.G.RESISTOR | 1.0K | 1/10W |
| R161 | NRSA02J-102 | M.G.RESISTOR | 1.0K | 1/10W |
| R162 | NRSA02J-102 | M.G.RESISTOR | 1.0K | 1/10W |
| R163 | NRSA02J-102 | M.G.RESISTOR | 1.0K | 1/10W |
| R164 | NRSA02J-103 | M.G.RESISTOR | 10K | 1/10W |
| R165 | NRSA02J-333 | M.G.RESISTOR | 33K | 1/10W |
| R168 | NRSA02J-102 | M.G.RESISTOR | 1.0K | 1/10W |
| R169 | NRSA02J-471 | M.G.RESISTOR | 470 | 1/10W |
| R170 | NRSA02J-102 | M.G.RESISTOR | 1.0K | 1/10W |
| R171 | NRSA02J-100 | M.G.RESISTOR | 10 | 1/10W |
| R172 | NRSA02J-102 | M.G.RESISTOR | 1.0K | 1/10W |
| R173 | NRSA02J-471 | M.G.RESISTOR | 470 | 1/10W |
| R174 | NRSA02J-102 | M.G.RESISTOR | 1.0K | 1/10W |
| R175 | NRSA02J-100 | M.G.RESISTOR | 10 | 1/10W |
| R176 | NRSA02J-102 | M.G.RESISTOR | 1.0K | 1/10W |
| R177 | NRSA02J-471 | M.G.RESISTOR | 470 | 1/10W |
| R178 | NRSA02J-102 | M.G.RESISTOR | 1.0K | 1/10W |
| R179 | NRSA02J-100 | M.G.RESISTOR | 10 | 1/10W |
| R180 | NRSA02J-104 | M.G.RESISTOR | 100K | 1/10W |
| R181 | NRSA02J-104 | M.G.RRSISTOR | 100K | 1/10W |
| R182 | NRSA02J-104 | M.G.RESISTOR | 100K | 1/10W |
| R183 | NRSA02J-221 | M.G.RESISTOR | 220 | 1/10W |
| R184 | NRSA02J-221 | M.G.RESISTOR | 220 | 1/10W |
| R185 | NRSA02J-221 | M.G.RESISTOR | 220 | 1/10W |
| R186 | NRSA02J-682 | M.G.RESISTOR | 6.8K | 1/10W |
| R187 | NRSA02J-221 | M.G.RESISTOR | 220 | 1/10W |
| R188 | NRSA02J-0R0 | M.G.RESISTOR | 0 | 1/10W |
| R189 | NRSA02J-392 | M.G.RESISTOR | 3.9K | 1/10W |

| Symbol No. | Part No. | Part Name | Description | |
|---|---|---|---|---|
| VR1 | NVP1416-502 | V RESISTOR | 5K | B INGAIN |
| VR2 | NVP1416-502 | V RESISTOR | 5K | G INGAIN |
| VR3 | NVP1416-502 | V RESISTOR | 5K | R INGAIN |
| VR4 | NVP1416-502 | V RESISTOR | 5K | B HI GAIN |
| VR5 | NVP1416-502 | V RESISTOR | 5K | G HI GAIN |
| VR6 | NVP1416-502 | V RESISTOR | 5K | R HI GAIN |
| VR7 | NVP1416-203 | V RESISTOR | 20K | R DY V PARA |
| VR8 | NVP1416-203 | V RESISTOR | 20K | G DY V PARA |
| VR9 | NVP1416-203 | V RESISTOR | 20K | R DY V SAW |
| VR10 | NVP1416-203 | V RESISTOR | 20K | G DY V SAW |
| VR11 | NVP1416-503 | V RESISTOR | 50K | B DC BAL |
| VR12 | NVP1416-503 | V RESISTOR | 50K | G DC BAL |
| VR13 | NVP1416-503 | V RESISTOR | 50K | R DC BAL |
| C1 | NEA10JM-337 | E CAP | 330 | 6.3V |
| C2 | NCF21EZ-104 | C CAP | 0.10 | 25V |
| C3 | NEA10JM-337 | E CAP | 330 | 6.3V |
| C4 | NEA10JM-337 | E CAP | 330 | 6.3V |
| C5 | NCF21EZ-104 | C CAP | 0.10 | 25V |
| C6 | NEA10JM-107 | E CAP | 100 | 6.3V |
| C7 | NCF21EZ-104 | C CAP | 0.10 | 25V |
| C8 | NCF21EZ-104 | C CAP | 0.10 | 25V |
| C9 | NCT03CH-390 | C CAP | 39P | 50V |
| C10 | NCF21EZ-104 | C CAP | 0.10 | 25V |
| C11 | NCT03CH-100 | C CAP | 10P | 50V |
| C12 | NCT03CH-470 | C CAP | 47P | 50V |
| C13 | NEN11HM-105 | NP E CAP | 1.0 | 50V |
| C14 | NEN11HM-105 | NP E CAP | 1.0 | 50V |
| C15 | NCF21EZ-104 | C CAP | 0.10 | 25V |
| C16 | NCF21HZ-103 | C CAP | 0.010 | 50V |
| C17 | NCT03CH-4R0 | C CAP | 4.0P | 50V |
| C18 | NCF21EZ-104 | C CAP | 0.10 | 25V |
| C19 | NCF21EZ-104 | C CAP | 0.10 | 25V |
| C20 | NCF21EZ-104 | C CAP | 0.10 | 25V |
| C21 | NCF21EZ-104 | C CAP | 0.10 | 25V |
| C22 | NCF21EZ-104 | C CAP | 0.10 | 25V |
| C23 | NCF21EZ-104 | C CAP | 0.10 | 25V |
| C24 | NEA10JM-107 | E CAP | 100 | 6.3V |
| C25 | NCF21EZ-104 | C CAP | 0.10 | 25V |
| C26 | NCF21EZ-104 | C CAP | 0.10 | 25V |
| C27 | NCT03CH-390 | C CAP | 39P | 50V |
| C28 | NCF21EZ-104 | C CAP | 0.10 | 25V |
| C30 | NCT03CH-470 | C CAP | 47P | 50V |
| C31 | NEN11HM-105 | NP E CAP | 1.0 | 50V |
| C32 | NEN11HM-105 | NP E CAP | 1.0 | 50V |
| C33 | NCF21EZ-104 | C CAP | 0.10 | 25V |
| C34 | NCF21HZ-103 | C CAP | 0.010 | 50V |
| C35 | NCT03CH-4R0 | C CAP | 4.0P | 50V |
| C36 | NCF21EZ-104 | C CAP | 0.10 | 25V |
| C37 | NCF21EZ-104 | C CAP | 0.10 | 25V |
| C38 | NCF21EZ-104 | C CAP | 0.10 | 25V |
| C39 | NCF21EZ-104 | C CAP | 0.10 | 25V |
| C40 | NCF21EZ-104 | C CAP | 0.10 | 25V |
| C41 | NEN10JM-476 | NP CAP | 47 | 6.3V |
| C42 | NEA10JM-107 | E CAP | 100 | 6.3V |
| C43 | NCF21EZ-104 | C CAP | 0.10 | 25V |
| C44 | NCF21EZ-104 | C CAP | 0.10 | 25V |
| C45 | NCT03CH-390 | C CAP | 39P | 50V |
| C46 | NCF21EZ-104 | C CAP | 0.10 | 25V |

| Symbol No. | Part No. | Part Name | Description | |
|---|---|---|---|---|
| C47 | NCT03CH-220 | C CAP | 22P | 50V |
| C48 | NCT03CH-470 | C CAP | 47P | 50V |
| C49 | NEN11HM-105 | NP E CAP | 1.0 | 50V |
| C50 | NEN11HM-105 | NP E CAP | 1.0 | 50V |
| C51 | NCF21EZ-104 | C CAP | 0.10 | 25V |
| C52 | NCF21HZ-103 | C CAP | 0.010 | 50V |
| C53 | NCT03CH-4R0 | C CAP | 4.0P | 50V |
| C54 | NCF21EZ-104 | C CAP | 0.10 | 25V |
| C55 | NCF21EZ-104 | C CAP | 0.10 | 25V |
| C56 | NCF21EZ-104 | C CAP | 0.10 | 25V |
| C57 | NCF21EZ-104 | C CAP | 0.10 | 25V |
| C58 | NCF21EZ-104 | C CAP | 0.10 | 25V |
| C59 | NCF21EZ-104 | C CAP | 0.10 | 25V |
| C60 | NEN10JM-476 | NP CAP | 47 | 6.3V |
| C61 | NCF21EZ-104 | C CAP | 0.10 | 25V |
| C62 | NCF21EZ-104 | C CAP | 0.10 | 25V |
| C63 | NCF21EZ-104 | C CAP | 0.10 | 25V |
| C64 | NEN11AM-106 | NP CAP | 10 | 10V |
| C65 | NEF11CM-105 | TA E CAP | 1.0 | 16V |
| C67 | NEN11AM-106 | NP CAP | 10 | 10V |
| C68 | NEF11CM-105 | TA E CAP | 1.0 | 16V |
| C69 | NCF21EZ-104 | C CAP | 0.10 | 25V |
| C70 | NCF21EZ-104 | C CAP | 0.10 | 25V |
| C71 | NCF21EZ-104 | C CAP | 0.10 | 25V |
| C72 | NCF21EZ-104 | C CAP | 0.10 | 25V |
| C73 | NCF21EZ-104 | C CAP | 0.10 | 25V |
| C74 | NCF21EZ-104 | C CAP | 0.10 | 25V |
| C76 | NEA10JM-107 | E CAP | 100 | 6.3V |
| C77 | NCF21EZ-104 | C CAP | 0.10 | 25V |
| C78 | NCF21EZ-104 | C CAP | 0.10 | 25V |
| C79 | NCF21EZ-104 | C CAP | 0.10 | 25V |
| C80 | NCF21EZ-104 | C CAP | 0.10 | 25V |
| C81 | NCF21EZ-104 | C CAP | 0.10 | 25V |
| C82 | NCF21EZ-104 | C CAP | 0.10 | 25V |
| C83 | NCF21EZ-104 | C CAP | 0.10 | 25V |
| C84 | NCF21EZ-104 | C CAP | 0.10 | 25V |
| C85 | NEA11AM-336 | E CAP | 33 | 10V |
| C86 | NEA11AM-336 | E CAP | 33 | 10V |
| C87 | NEA11AM-336 | E CAP | 33 | 10V |
| C88 | NEA10JM-107 | E CAP | 100 | 6.3V |
| C89 | NCF21EZ-104 | C CAP | 0.10 | 25V |
| C90 | NCF21EZ-104 | C CAP | 0.10 | 25V |
| C91 | NCF21EZ-104 | C CAP | 0.10 | 25V |
| C92 | NCF21EZ-104 | C CAP | 0.10 | 25V |
| C93 | NEF11AM-475 | TA E CAP | 4.7 | 10V |
| C94 | NCF21EZ-104 | C CAP | 0.10 | 25V |
| C95 | NEF11AM-475 | TA E CAP | 4.7 | 10V |
| C96 | NCF21EZ-104 | C CAP | 0.10 | 25V |
| C97 | NEF11AM-475 | TA E CAP | 4.7 | 10V |
| C98 | NCT03CH-9R0 | C CAP | 9.0P | 50V |
| C99 | NCT03CH-9R0 | C CAP | 9.0P | 50V |
| C100 | NCT03CH-9R0 | C CAP | 9.0P | 50V |
| C101 | NEF11CM-106 | TA E CAP | 10 | 16V |
| C102 | NEF11CM-106 | TA E CAP | 10 | 16V |
| C103 | NCF21HZ-103 | C CAP | 0.010 | 50V |
| C104 | NCF21HZ-103 | C CAP | 0.010 | 50V |
| C105 | NCF21HZ-103 | C CAP | 0.010 | 50V |
| C106 | NCT03CH-2R0 | C CAP | 2.0P | 50V |

## 7.8 PR2 board assembly list 08
## ⟨SCK2307-01-00A⟩

08□□□□□□□

| Symbol No. | Part No. | Part Name | Description |
|---|---|---|---|
| L1 | SSV1330-150 | COIL | 15μH |
| L2 | SSV1330-150 | COIL | 15μH |
| L3 | SCV1950-120 | PEAKING COIL | 12μH |
| L4 | SCV1950-120 | PEAKING COIL | 12μH |
| L5 | SCV1950-120 | PEAKING COIL | 12μH |
| DL1 | SCV1253-001 | DELAY LINE | 140nsec |
| DL2 | SCV1253-001 | DELAY LINE | 140nsec |
| CN1 | SCV0501-001 | CONNECTOR | 30PIN |
| CN36 | SCV1848-016 | CONNECTOR | 16PIN |
| CN37 | SCV1848-030 | CONNECTOR | 30PIN |
| TP1 | SCV1880-001 | TEST POINT | |
| TP2 | SCV1880-001 | TEST POINT | |
| TP3 | SCV1880-001 | TEST POINT | |
| TP4 | SCV1880-001 | TEST POINT | |

| Symbol No. | Part No. | Part Name | Description |
|---|---|---|---|
| IC1 | JCS0003 | I.C.(M) | JVC |
| IC2 | JCS0003 | I.C.(M) | JVC |
| IC3 | JCS0003 | I.C.(M) | JVC |
| IC4 | RC064M | I.C.(M) | JRC |
| IC5 | RC064M | I.C.(M) | JRC |
| IC6 | RC064M | I.C.(M) | JRC |
| IC7 | RC064M | I.C.(M) | JRC |
| IC8 | RC062M | I.C.(M) | JRC |
| IC9 | RC062M | I.C.(M) | JRC |
| IC10 | RC062M | I.C.(M) | JRC |
| IC11 | RC062M | I.C.(M) | JRC |
| IC12 | RC064M | I.C.(M) | JRC |
| IC13 | TC4S69F | I.C.(M) | TOSHIBA |
| IC14 | TC4S69F | I.C.(M) | TOSHIBA |
| Q1 | 2SB1219(QR) | TRANSISTOR | MATSUSHITA |
| Q2 | 2SD1820(QR) | TRANSISTOR | MATSUSHITA |
| Q3 | 2SD1820(QR) | TRANSISTOR | MATSUSHITA |
| Q4 | 2SK662(QR) | FET | MATSUSHITA |
| Q5 | 2SB1219(QR) | TRANSISTOR | MATSUSHITA |
| Q6 | 2SC3930(BC) | TRANSISTOR | MATSUSHITA |
| Q7 | 2SD1820(QR) | TRANSISTOR | MATSUSHITA |
| Q8 | 2SK662(QR) | FET | MATSUSHITA |
| Q9 | 2SB1219(QR) | TRANSISTOR | MATSUSHITA |
| Q10 | 2SD1820(QR) | TRANSISTOR | MATSUSHITA |
| Q11 | 2SD1820(QR) | TRANSISTOR | MATSUSHITA |
| Q12 | 2SK662(QR) | FET | MATSUSHITA |
| Q13 | 2SC3930(BC) | TRANSISTOR | MATSUSHITA |
| Q14 | 2SC3930(BC) | TRANSISTOR | MATSUSHITA |
| Q15 | 2SC3930(BC) | TRANSISTOR | MATSUSHITA |
| Q16 | 2SC3930(BC) | TRANSISTOR | MATSUSHITA |
| Q17 | 2SC3930(BC) | TRANSISTOR | MATSUSHITA |
| Q18 | 2SC3930(BC) | TRANSISTOR | MATSUSHITA |
| Q19 | DTC124EU | TRANSISTOR | ROHM |
| Q20 | 2SC3930(BC) | TRANSISTOR | MATSUSHITA |
| Q21 | 2SC3930(BC) | TRANSISTOR | MATSUSHITA |
| Q22 | 2SC3930(BC) | TRANSISTOR | MATSUSHITA |
| Q23 | 2SC3930(BC) | TRANSISTOR | MATSUSHITA |
| Q24 | 2SC3930(BC) | TRANSISTOR | MATSUSHITA |
| Q25 | 2SC3930(BC) | TRANSISTOR | MATSUSHITA |
| Q26 | 2SC3930(BC) | TRANSISTOR | MATSUSHITA |
| Q27 | 2SA1532(BC) | TRANSISTOR | MATSUSHITA |
| Q28 | DTC124EU | TRANSISTOR | ROHM |
| Q29 | DTA124EU | D.TRANSISTER | ROHM |
| Q30 | 2SC3930(BC) | TRANSISTOR | MATSUSHITA |
| Q31 | 2SC3930(BC) | TRANSISTOR | MATSUSHITA |
| Q32 | DTC124EU | TRANSISTOR | ROHM |
| Q33 | 2SA1532(BC) | TRANSISTOR | MATSUSHITA |
| Q34 | 2SA1532(BC) | TRANSISTOR | MATSUSHITA |
| Q35 | 2SA1532(BC) | TRANSISTOR | MSTAUSHITA |
| Q36 | 2SC3930(BC) | TRANSISTOR | MATSUSHITA |
| Q37 | 2SC3930(BC) | TRANSISTOR | MATSUSHITA |
| Q38 | 2SC3930(BC) | TRANSISTOR | MATSUSHITA |
| D1 | MA142A | SI DIODE | MATSUSHITA |
| D2 | MA165 | SI DIODE | MATSUSHITA |
| R1 | NRSA02J-103 | M.G.RESISTOR | 10K 1/10W |

| Symbol No. | Part No. | Part Name | Description | |
|---|---|---|---|---|
| R2 | NRSA02J-333 | M.G.RESISTOR | 33K | 1/10W |
| R3 | NRSA02J-103 | M.G.RESISTOR | 10K | 1/10W |
| R4 | NRSA02J-333 | M.G.RESISTOR | 33K | 1/10W |
| R5 | NRSA02J-272 | M.G.RESISTOR | 2.7K | 1/10W |
| R6 | NRSA02J-223 | M.G.RESISTOR | 22K | 1/10W |
| R7 | NRSA02J-273 | M.G.RESISTOR | 27K | 1/10W |
| R8 | NRSA02J-151 | M.G.RESISTOR | 150 | 1/10W |
| R9 | NRSA02J-332 | M.G.RESISTOR | 3.3K | 1/10W |
| R10 | NRSA02J-332 | M.G.RESISTOR | 3.3K | 1/10W |
| R11 | NRSA02J-332 | M.G.RESISTOR | 3.3K | 1/10W |
| R12 | NRSA02J-562 | M.G.RESISTOR | 5.6K | 1/10W |
| R13 | NRSA02J-101 | M.G.RESISTOR | 100 | 1/10W |
| R14 | NRSA02J-102 | M.G.RESISTOR | 1.0K | 1/10W |
| R15 | NRSA02J-472 | M.G.RESISTOR | 4.7K | 1/10W |
| R16 | NRSA02J-332 | M.G.RESISTOR | 3.3K | 1/10W |
| R17 | NRSA02J-102 | M.G.RESISTOR | 1.0K | 1/10W |
| R18 | NRSA02J-101 | M.G.RESISTOR | 100 | 1/10W |
| R19 | NRSA02J-103 | M.G.RESISTOR | 10K | 1/10W |
| R20 | NRSA02J-222 | M.G.RESISTOR | 2.2K | 1/10W |
| R21 | NRSA02J-223 | M.G.RESISTOR | 22K | 1/10W |
| R22 | NRSA02J-183 | M.G.RESISTOR | 18K | 1/10W |
| R23 | NRSA02J-101 | M.G.RESISTOR | 100 | 1/10W |
| R24 | NRSA02J-562 | M.G.RESISTOR | 5.6K | 1/10W |
| R25 | NRSA02J-472 | M.G.RESISTOR | 4.7K | 1/10W |
| R26 | NRSA02J-103 | M.G.RESISTOR | 10K | 1/10W |
| R27 | NRSA02J-333 | M.G.RESISTOR | 33K | 1/10W |
| R28 | NRSA02J-103 | M.G.RESISTOR | 10K | 1/10W |
| R29 | NRSA02J-333 | M.G.RESISTOR | 33K | 1/10W |
| R30 | NRSA02J-272 | M.G.RESISTOR | 2.7K | 1/10W |
| R31 | NRSA02J-223 | M.G.RESISTOR | 22K | 1/10W |
| R32 | NRSA02J-273 | M.G.RESISTOR | 27K | 1/10W |
| R33 | NRSA02J-151 | M.G.ESISTORR | 150 | 1/10W |
| R34 | NRSA02J-332 | M.G.RESISTOR | 3.3K | 1/10W |
| R35 | NRSA02J-332 | M.G.RESISTOR | 3.3K | 1/10W |
| R36 | NRSA02J-332 | M.G.RESISTOR | 3.3K | 1/10W |
| R37 | NRSA02J-562 | M.G.RESISTOR | 5.6K | 1/10W |
| R38 | NRSA02J-101 | M.G.RESISTOR | 100 | 1/10W |
| R39 | NRSA02J-102 | M.G.RESISTOR | 1.0K | 1/10W |
| R42 | NRSA02J-101 | M.G.RESISTOR | 100 | 1/10W |
| R43 | NRSA02J-103 | M.G.RESISTOR | 10K | 1/10W |
| R44 | NRSA02J-222 | M.G.RESISTOR | 2.2K | 1/10W |
| R45 | NRSA02J-223 | M.G.RESISTOR | 22K | 1/10W |
| R46 | NRSA02J-183 | M.G.RESISTOR | 18K | 1/10W |
| R47 | NRSA02J-101 | M.G.RESISTOR | 100 | 1/10W |
| R48 | NRSA02J-562 | M.G.RESISTOR | 5.6K | 1/10W |
| R49 | NRSA02J-472 | M.G.RESISTOR | 4.7K | 1/10W |
| R50 | NRSA02J-103 | M.G.RESISTOR | 10K | 1/10W |
| R51 | NRSA02J-333 | M.G.RESISTOR | 33K | 1/10W |
| R52 | NRSA02J-103 | M.G.RESISTOR | 10K | 1/10W |
| R53 | NRSA02J-333 | M.G.RESISTOR | 33K | 1/10W |
| R54 | NRSA02J-272 | M.G.RESISTOR | 2.7K | 1/10W |
| R55 | NRSA02J-223 | M.G.RESISTOR | 22K | 1/10W |
| R56 | NRSA02J-273 | M.G.RESISTOR | 27K | 1/10W |
| R57 | NRSA02J-151 | M.G.RESISTOR | 150 | 1/10W |
| R58 | NRSA02J-332 | M.G.RESISTOR | 3.3K | 1/10W |
| R59 | NRSA02J-332 | M.G.RESISTOR | 3.3K | 1/10W |
| R60 | NRSA02J-332 | M.G.RESISTOR | 3.3K | 1/10W |
| R61 | NRSA02J-562 | M.G.RESISTOR | 5.6K | 1/10W |
| R62 | NRSA02J-101 | M.G.RESISTOR | 100 | 1/10W |

| Symbol No. | Part No. | Part Name | Description | |
|---|---|---|---|---|
| R63 | NRSA02J-102 | M.G.RESISTOR | 1.0K | 1/10W |
| R64 | NRSA02J-472 | M.G.RESISTOR | 4.7K | 1/10W |
| R65 | NRSA02J-332 | M.G.RESISTOR | 3.3K | 1/10W |
| R66 | NRSA02J-102 | M.G.RESISTOR | 1.0K | 1/10W |
| R67 | NRSA02J-103 | M.G.RESISTOR | 10K | 1/10W |
| R68 | NRSA02J-222 | M.G.RESISTOR | 2.2K | 1/10W |
| R69 | NRSA02J-223 | M.G.RESISTOR | 22K | 1/10W |
| R70 | NRSA02J-183 | M.G.RESISTOR | 18K | 1/10W |
| R71 | NRSA02J-101 | M.G.RESISTOR | 100 | 1/10W |
| R72 | NRSA02J-562 | M.G.RESISTOR | 5.6K | 1/10W |
| R73 | NRSA02J-472 | M.G.RESISTOR | 4.7K | 1/10W |
| R74 | NRSA02J-222 | M.G.RESISTOR | 2.2K | 1/10W |
| R75 | NRSA02J-123 | M.G.RESISTOR | 12K | 1/10W |
| R76 | NRSA02J-123 | M.G.RESISTOR | 12K | 1/10W |
| R77 | NRSA02J-471 | M.G.RESISTOR | 470 | 1/10W |
| R78 | NRSA02J-471 | M.G.RESISTOR | 470 | 1/10W |
| R79 | NRSA02J-152 | M.G.RESISTOR | 1.5K | 1/10W |
| R80 | NRSA02J-123 | M.G.RESISTOR | 12K | 1/10W |
| R81 | NRSA02J-471 | M.G.RESISTOR | 470 | 1/10W |
| R82 | NRSA02J-471 | M.G.RESISTOR | 470 | 1/10W |
| R83 | NRSA02J-152 | M.G.RESISTOR | 1.5K | 1/10W |
| R84 | NRSA02J-153 | M.G.RESISTOR | 15K | 1/10W |
| R85 | NRSA02J-822 | M.G.RESISTOR | 8.2K | 1/10W |
| R86 | NRSA02J-472 | M.G.RESISTOR | 4.7K | 1/10W |
| R87 | NRSA02J-821 | M.G.RESISTOR | 820 | 1/10W |
| R88 | NRSA02J-472 | M.G.RESISTOR | 4.7K | 1/10W |
| R89 | NRSA02J-103 | M.G.RESISTOR | 10K | 1/10W |
| R90 | NRSA02J-472 | M.G.RESISTOR | 4.7K | 1/10W |
| R91 | NRSA02J-183 | M.G.RESISTOR | 18K | 1/10W |
| R92 | NRSA02J-472 | M.G.RESISTOR | 4.7K | 1/10W |
| R93 | NRSA02J-472 | M.G.RESISTOR | 4.7K | 1/10W |
| R94 | NRSA02J-392 | M.G.RESISTOR | 3.9K | 1/10W |
| R95 | NRSA02J-333 | M.G.RESISTOR | 33K | 1/10W |
| R96 | NRSA02J-683 | M.G.RESISTOR | 68K | 1/10W |
| R97 | NRSA02J-223 | M.G.RESISTOR | 22K | 1/10W |
| R98 | NRSA02J-472 | M.G.RESISTOR | 4.7K | 1/10W |
| R99 | NRSA02J-823 | M.G.RESISTOR | 82K | 1/10W |
| R100 | NRSA02J-223 | M.G.RESISTOR | 22K | 1/10W |
| R101 | NRSA02J-223 | M.G.RESISTOR | 22K | 1/10W |
| R102 | NRSA02J-103 | M.G.RESISTOR | 10K | 1/10W |
| R103 | NRSA02J-153 | M.G.RESISTOR | 15K | 1/10W |
| R104 | NRSA02J-332 | M.G.RESISTOR | 3.3K | 1/10W |
| R105 | NRSA02J-332 | M.G.RESISTOR | 3.3K | 1/10W |
| R106 | NRSA02J-332 | M.G.RESISTOR | 3.3K | 1/10W |
| R107 | NRSA02J-332 | M.G.RESISTOR | 3.3K | 1/10W |
| R108 | NRSA02J-332 | M.G.RESISTOR | 3.3K | 1/10W |
| R111 | NRSA02J-683 | M.G.RESISTOR | 68K | 1/10W |
| R112 | NRSA02J-103 | M.G.RESISTOR | 10K | 1/10W |
| R113 | NRSA02J-153 | M.G.RESISTOR | 15K | 1/10W |
| R114 | NRSA02J-103 | M.G.RESISTOR | 10K | 1/10W |
| R115 | NRSA02J-332 | M.G.RESISTOR | 3.3K | 1/10W |
| R116 | NRSA02J-332 | M.G.RESISTOR | 3.3K | 1/10W |
| R117 | NRSA02J-332 | M.G.RESISTOR | 3.3K | 1/10W |
| R118 | NRSA02J-332 | M.G.RESISTOR | 3.3K | 1/10W |
| R119 | NRSA02J-683 | M.G.RESISTOR | 68K | 1/10W |
| R120 | NRSA02J-103 | M.G.RESISTOR | 10K | 1/10W |
| R121 | NRSA02J-153 | M.G.RESISTOR | 15K | 1/10W |
| R122 | NRSA02J-103 | M.G.RESISTOR | 10K | 1/10W |
| R123 | NRSA02J-332 | M.G.RESISTOR | 3.3K | 1/10W |
| R124 | NRSA02J-332 | M.G.RESISTOR | 3.3K | 1/10W |

| Symbol No. | Part No. | Part Name | Description | |
|---|---|---|---|---|
| R125 | NRSA02J-332 | M.G.RESISTOR | 3.3K | 1/10W |
| R128 | NRSA02J-683 | M.G.RESISTOR | 68K | 1/10W |
| R129 | NRSA02J-103 | M.G.RESISTOR | 10K | 1/10W |
| R130 | NRSA02J-153 | M.G.RESISTOR | 15K | 1/10W |
| R131 | NRSA02J-103 | M.G.RESISTOR | 10K | 1/10W |
| R132 | NRSA02J-564 | M.G.RESISTOR | 560K | 1/10W |
| R133 | NRSA02J-564 | M.G.RESISTOR | 560K | 1/10W |
| R134 | NRSA02J-684 | M.G.RESISTOR | 680K | 1/10W |
| R135 | NRSA02J-124 | M.G.RESISTOR | 120K | 1/10W |
| R136 | NRSA02J-224 | M.G.RESISTOR | 220K | 1/10W |
| R137 | NRSA02J-683 | M.G.RESISTOR | 68K | 1/10W |
| R138 | NRSA02J-104 | M.G.RESISTOR | 100K | 1/10W |
| R139 | NRSA02J-104 | M.G.RESISTOR | 100K | 1/10W |
| R140 | NRSA02J-272 | M.G.RESISTOR | 2.7K | 1/10W |
| R141 | NRSA02J-332 | M.G.RESISTOR | 3.3K | 1/10W |
| R142 | NRSA02J-332 | M.G.RESISTOR | 3.3K | 1/10W |
| R143 | NRSA02J-183 | M.G.RESISTOR | 18K | 1/10W |
| R144 | NRSA02J-273 | M.G.RESISTOR | 27K | 1/10W |
| R145 | NRSA02J-332 | M.G.RESISTOR | 3.3K | 1/10W |
| R146 | NRSA02J-332 | M.G.RESISTOR | 3.3K | 1/10W |
| R147 | NRSA02J-183 | M.G.RESISTOR | 18K | 1/10W |
| R148 | NRSA02J-472 | M.G.RESISTOR | 4.7K | 1/10W |
| R149 | NRSA02J-273 | M.G.RESISTOR | 27K | 1/10W |
| R150 | NRSA02J-332 | M.G.RESISTOR | 3.3K | 1/10W |
| R151 | NRSA02J-332 | M.G.RESISTOR | 3.3K | 1/10W |
| R152 | NRSA02J-183 | M.G.RESISTOR | 18K | 1/10W |
| R153 | NRSA02J-273 | M.G.RESISTOR | 27K | 1/10W |
| R154 | NRSA02J-221 | M.G.RESISTOR | 220 | 1/10W |
| R155 | NRSA02J-562 | M.G.RESISTOR | 5.6K | 1/10W |
| R156 | NRSA02J-223 | M.G.RESISTOR | 22K | 1/10W |
| R157 | NRSA02J-332 | M.G.RESISTOR | 3.3K | 1/10W |
| R158 | NRSA02J-183 | M.G.RESISTOR | 18K | 1/10W |
| R159 | NRSA02J-153 | M.G.RESISTOR | 15K | 1/10W |
| R160 | NRSA02J-392 | M.G.RESISTOR | 3.9K | 1/10W |
| R162 | NRSA02J-563 | M.G.RESISTOR | 56K | 1/10W |
| R163 | NRSA02J-563 | M.G.RESISTOR | 56K | 1/10W |
| R164 | NRSA02J-332 | M.G.RESISTOR | 3.3K | 1/10W |
| R165 | NRSA02J-102 | M.G.RESISTOR | 1.0K | 1/10W |
| R166 | NRSA02J-102 | M.G.RESISTOR | 1.0K | 1/10W |
| R167 | NRSA02J-102 | M.G.RESISTOR | 1.0K | 1/10W |
| R168 | NRSA02J-0R0 | M.G.RESISTOR | 0 | 1/10W |
| R172 | NRSA02J-103 | M.G.RESISTOR | 10K | 1/10W |
| R173 | NRSA02J-102 | M.G.RESISTOR | 1.0K | 1/10W |
| R174 | NRSA02J-104 | M.G.RESISTOR | 100K | 1/10W |
| R177 | NRSA02J-392 | M.G.RESISTOR | 3.9K | 1/10W |
| R178 | NRSA02J-392 | M.G.RESISTOR | 3.9K | 1/10W |
| R179 | NRSA02J-392 | M.G.RESISTOR | 3.9K | 1/10W |
| R180 | NRSA02J-183 | M.G.RESISTOR | 18K | 1/10W |
| R181 | NRSA02J-104 | M.G.RESISTOR | 100K | 1/10W |
| R182 | NRSA02J-183 | M.G.RESISTOR | 18K | 1/10W |
| R183 | NRSA02J-104 | M.G.RESISTOR | 100K | 1/10W |
| R184 | NRSA02J-183 | M.G.RESISTOR | 18K | 1/10W |
| R185 | NRSA02J-104 | M.G.RESISTOR | 100K | 1/10W |
| VR1 | NVP1416-102 | V.RESISTOR | 1K | B OUT GAIN |
| VR2 | NVP1416-102 | V.RESISTOR | 1K | R OUT GAIN |
| VR3 | NVP1416-103 | V.RESISTOR | 10K | B GAMMA |
| VR4 | NVP1416-103 | V.RESISTOR | 10K | G GAMMA |
| VR5 | NVP1416-103 | V.RESISTOR | 10K | R GAMMA |

| Symbol No. | Part No. | Part Name | Description | |
|---|---|---|---|---|
| VR6 | NVP1416-103 | V.RESISTOR | 10K | B KNEE |
| VR7 | NVP1416-103 | V.RESISTOR | 10K | B BLACK |
| VR8 | NVP1416-103 | V.RESISTOR | 10K | G KNEE |
| VR9 | NVP1416-103 | V.RESISTOR | 10K | G BLACK |
| VR10 | NVP1416-103 | V.RESISTOR | 10K | R KNEE |
| VR11 | NVP1416-103 | V.RESISTOR | 10K | R BLACK |
| VR13 | NVP1416-103 | V.RESISTOR | 10K | B FLARE |
| VR14 | NVP1416-103 | V.RESISTOR | 10K | G FLARE |
| VR15 | NVP1416-103 | V.RESISTOR | 10K | R FLARE |
| VR16 | NVP1416-502 | V RESISTOR | 5K | B WHITE CLIP |
| VR17 | NVP1416-502 | V RESISTOR | 5K | G WHITE CLIP |
| VR18 | NVP1416-502 | V RESISTOR | 5K | R WHITE CLIP |
| VR19 | NVP1415-202 | V RESISTOR | 2K | B-R MATRIX |
| VR20 | NVP1415-202 | V RESISTOR | 2K | B-G MATRIX |
| VR21 | NVP1415-202 | V RESISTOR | 2K | G-B MATRIX |
| C1 | NEA10JM-337 | E CAP | 330 | 6.3V |
| C2 | NCF21EZ-104 | C CAP | 0.10 | 25V |
| C3 | NEA10JM-337 | E CAP | 330 | 6.3V |
| C4 | NCF21EZ-104 | C CAP | 0.10 | 25V |
| C5 | NCB21HK-333 | C CAP | 0.033 | 50V |
| C7 | NCF21EZ-104 | C CAP | 0.10 | 25V |
| C8 | NEA10JM-107 | E CAP | 100 | 6.3V |
| C9 | NEF11EM-475 | T CAP | 4.7 | 25V |
| C10 | NCF21EZ-104 | C CAP | 0.10 | 25V |
| C11 | NEA10JM-107 | E CAP | 100 | 6.3V |
| C12 | NEF11CM-105 | TA E CAP | 1.0 | 16V |
| C13 | NEF11CM-105 | TA E CAP | 1.0 | 16V |
| C14 | NCB21HK-333 | C CAP | 0.033 | 50V |
| C15 | NCB21HK-333 | C CAP | 0.033 | 50V |
| C16 | NCF21EZ-104 | C CAP | 0.10 | 25V |
| C17 | NCF21EZ-104 | C CAP | 0.10 | 25V |
| C18 | NCF21EZ-104 | C CAP | 0.10 | 25V |
| C19 | NEN11AM-106 | NP CAP | 10 | 10V |
| C20 | NEF11CM-105 | TA E CAP | 1.0 | 16V |
| C21 | NEN11HM-105 | NP E CAPA | 1.0 | 50V |
| C22 | NCF21EZ-104 | C CAP | 0.10 | 25V |
| C23 | NEN11HM-105 | NP E CAP | 1.0 | 50V |
| C24 | NCT03CH-470 | C CAP | 47P | 50V |
| C25 | NEF11CM-105 | TA E CAP | 1.0 | 16V |
| C26 | NEA10JM-107 | E CAP | 100 | 6.3V |
| C27 | NCF21EZ-104 | C CAP | 0.10 | 25V |
| C28 | NEA10JM-107 | E CAP | 100 | 6.3V |
| C29 | NCF21EZ-104 | C CAP | 0.10 | 25V |
| C30 | NCT03CH-821 | C CAP | 820P | 50V |
| C31 | NEF11CM-105 | TA E CAP | 1.0 | 16V |
| C32 | NCB21HK-333 | C CAP | 0.033 | 50V |
| C34 | NCF21EZ-104 | C CAP | 0.10 | 25V |
| C35 | NEA10JM-107 | E CAP | 100 | 6.3V |
| C36 | NEF11EM-475 | T CAP | 4.7 | 25V |
| C37 | NCF21EZ-104 | C CAP | 0.10 | 25V |
| C38 | NEA10JM-107 | E CAP | 100 | 6.3V |
| C39 | NEF11CM-105 | TA E CAP | 1.0 | 16V |
| C40 | NEF11CM-105 | TA E CAP | 1.0 | 16V |
| C41 | NCB21HK-333 | C CAP | 0.033 | 50V |
| C42 | NCB21HK-333 | C CAP | 0.033 | 50V |
| C43 | NCF21EZ-104 | C CAP | 0.10 | 25V |
| C44 | NCF21EZ-104 | C CAP | 0.10 | 25V |
| C45 | NCF21EZ-104 | C CAP | 0.10 | 25V |

| Symbol No. | Part No. | Part Name | Description | |
|---|---|---|---|---|
| C46 | NEN11AM-106 | NP CAP | 10 | 10V |
| C47 | NEF11CM-105 | TA E CAP | 1.0 | 16V |
| C48 | NEN11HM-105 | NP E CAP | 1.0 | 50V |
| C49 | NCF21EZ-104 | C CAP | 0.10 | 25V |
| C50 | NEN11HM-105 | NP E CAP | 1.0 | 50V |
| C51 | NCT03CH-470 | C CAP | 47P | 50V |
| C52 | NEF11CM-105 | TA E CAP | 1.0 | 16V |
| C53 | NEA10JM-107 | E CAP | 100 | 6.3V |
| C54 | NCF21EZ-104 | C CAP | 0.10 | 25V |
| C55 | NEA10JM-107 | E CAP | 100 | 6.3V |
| C56 | NCF21EZ-104 | C CAP | 0.10 | 25V |
| C57 | NCT03CH-821 | C CAP | 820P | 50V |
| C58 | NEF11CM-105 | TA E CAP | 1.0 | 16V |
| C59 | NCB21HK-333 | C CAP | 0.033 | 50V |
| C61 | NCF21EZ-104 | C CAP | 0.10 | 25V |
| C62 | NEA10JM-107 | E CAP | 100 | 6.3V |
| C63 | NEF11EM-475 | T CAP | 4.7 | 25V |
| C64 | NCF21EZ-104 | C CAP | 0.10 | 25V |
| C65 | NEA10JM-107 | E CAP | 100 | 6.3V |
| C66 | NEF11CM-105 | TA E CAP | 1.0 | 16V |
| C67 | NEF11CM-105 | TA E CAP | 1.0 | 16V |
| C68 | NCB21HK-333 | C CAP | 0.033 | 50V |
| C69 | NCB21HK-333 | C CAP | 0.033 | 50V |
| C70 | NCF21EZ-104 | C CAP | 0.10 | 25V |
| C71 | NCF21EZ-104 | C CAP | 0.10 | 25V |
| C72 | NCF21EZ-104 | C CAP | 0.10 | 25V |
| C73 | NEN11AM-106 | NP CAP | 10 | 10V |
| C74 | NCF21EZ-104 | C CAP | 0.10 | 25V |
| C75 | NEN11HM-105 | NP E CAP | 1.0 | 50V |
| C76 | NCF21EZ-104 | C CAP | 0.10 | 25V |
| C77 | NEN11HM-105 | NP E CAP | 1.0 | 50V |
| C78 | NCT03CH-470 | C CAP | 47P | 50V |
| C79 | NEF11CM-105 | TA E CAP | 1.0 | 16V |
| C80 | NEA10JM-107 | E CAP | 100 | 6.3V |
| C81 | NCF21EZ-104 | C CAP | 0.10 | 25V |
| C82 | NEA10JM-107 | E CAP | 100 | 6.3V |
| C83 | NCF21EZ-104 | C CAP | 0.10 | 25V |
| C84 | NCT03CH-821 | C CAP | 820P | 50V |
| C85 | NEF11CM-105 | TA E CAP | 1.0 | 16V |
| C86 | NEA11AM-336 | E CAP | 33 | 10V |
| C87 | NCF21EZ-104 | C CAP | 0.10 | 25V |
| C88 | NEA11EM-106 | E CAP | 10 | 25V |
| C89 | NCF21EZ-104 | C CAP | 0.10 | 25V |
| C90 | NEA11AM-336 | E CAP | 33 | 10V |
| C91 | NCF21EZ-104 | C CAP | 0.10 | 25V |
| C92 | NCF21EZ-104 | C CAP | 0.10 | 25V |
| C93 | NCF21EZ-104 | C CAP | 0.10 | 25V |
| C94 | NEN11AM-106 | NP CAP | 10 | 10V |
| C95 | NCF21EZ-104 | C CAP | 0.10 | 25V |
| C96 | NCF21EZ-104 | C CAP | 0.10 | 25V |
| C97 | NCF21EZ-104 | C CAP | 0.10 | 25V |
| C98 | NCF21EZ-104 | C CAP | 0.10 | 25V |
| C99 | NCF21EZ-104 | C CAP | 0.10 | 25V |
| C100 | NCF21EZ-104 | C CAP | 0.10 | 25V |
| C101 | NCF21EZ-104 | C CAP | 0.10 | 25V |
| C102 | NCF21EZ-104 | C CAP | 0.10 | 25V |
| C103 | NCF21EZ-104 | C CAP | 0.10 | 25V |
| C104 | NCF21EZ-104 | C CAP | 0.10 | 25V |
| C105 | NCF21EZ-104 | C CAP | 0.10 | 25V |

| Symbol No. | Part No. | Part Name | Description | |
|---|---|---|---|---|
| C106 | NCF21EZ-104 | C CAP | 0.10 | 25V |
| C107 | NEA11AM-336 | E CAP | 33 | 10V |
| C108 | NCF21EZ-104 | C CAP | 0.10 | 25V |
| C109 | NCF21EZ-104 | C CAP | 0.10 | 25V |
| C110 | NEF11DM-684 | T CAP | 0.68 | 20V |
| C111 | NCF21EZ-104 | C CAP | 0.10 | 25V |
| C112 | NCF21EZ-104 | C CAP | 0.10 | 25V |
| C113 | NCF21EZ-104 | C CAP | 0.10 | 25V |
| C114 | NCF21EZ-104 | C CAP | 0.10 | 25V |
| C115 | NCF21EZ-104 | C CAP | 0.10 | 25V |
| C116 | NEA11AM-336 | E CAP | 33 | 10V |
| C117 | NCF21EZ-104 | C CAP | 0.10 | 25V |
| C118 | NEN11AM-106 | NP CAP | 10 | 10V |
| C119 | NCT03CH-560 | C CAP | 56P | 50V |
| C120 | NCT03CH-560 | C CAP | 56P | 50V |
| C121 | NCT03CH-560 | C CAP | 56P | 50V |
| C122 | QCT25CH-100 | C CAP | 10P | 50V |
| L1 | SSV1330-150 | COIL | 15μH | |
| L2 | SSV1330-150 | COIL | 15μH | |
| L3 | SCV1950-221 | PEAKING COIL | 220μH | |
| L4 | SCV1950-221 | PEAKING COIL | 220μH | |
| L5 | SCV1950-221 | PEAKING COIL | 220μH | |
| S1 | QSRAA12-S01 | SWITCH | MATRIX ON/OFF | |
| S2 | QSRAA12-S01 | SWITCH | GAMMA ON/OFF | |
| CN37 | SCV1849-030 | CONNECTOR | 30PIN | |
| TP1 | SCV1880-001 | TEST POINT | | |
| TP2 | SCV1880-001 | TEST POINT | | |
| TP3 | SCV1880-001 | TEST POINT | | |
| TP4 | SCV1880-001 | TEST POINT | | |
| TP5 | SCV1880-001 | TEST POINT | | |
| TP6 | SCV1880-001 | TEST POINT | | |
| TP7 | SCV1880-001 | TEST POINT | | |
| TP8 | SCV1880-001 | TEST POINT | | |
| TP9 | SCV1880-001 | TEST POINT | | |

## 7.9 CC board assembly list 0 9
**for U version 〈SCK2307-02-N0A〉**
**for E version 〈SCK2308-02-P0A〉** 0 9 □ □ □ □ □ □

| Symbol No. | Part No. | Part Name | Description |
|---|---|---|---|
| IC1 | RC1496M | I.C.(M) | RAYTHEON |
| IC2 | UA733CNS | I.C.(M) | TEXAS |
| IC3 | RC062M | I.C.(M) | JRC |
| IC4 | UA733CNS | I.C.(M) | TEXAS |
| IC5 | RC062M | I.C.(M) | JRC |
| IC6 | UA733CNS | I.C.(M) | TEXAS |
| IC9 | RC1496M | I.C.(M) | RAYTHEON |
| Q1 | 2SC3930(BC) | TRANSISTOR | MATSUSHITA |
| Q2 | 2SC3930(BC) | TRANSISTOR | MATSUSHITA |
| Q3 | 2SA1622(M6) | TRANSISTOR | SANYO |
| Q4 | 2SA1532(BC) | TRANSISTOR | MATSUSHITA |
| Q5 | 2SD1820(QR) | TRANSISTOR | MATSUSHITA |
| Q6 | 2SK662(QR) | FET | MATSUSHITA |
| Q7 | 2SD1820(QR) | TRANSISTOR | MATSUSHITA |
| Q8 | 2SC3930(BC) | TRANSISTOR | MATSUSHITA |
| Q9 | 2SC3930(BC) | TRANSISTOR | MATSUSHITA |
| Q10 | 2SC3930(BC) | TRANSISTOR | MATSUSHITA |
| Q11 | 2SA1532(BC) | TRANSISTOR | MATSUSHITA |
| Q12 | 2SK662(QR) | FET | MATSUSHITA |
| Q13 | 2SA1532(BC) | TRANSISTOR | MATSUSHITA |
| Q14 | 2SA1532(BC) | TRANSISTOR | MATSUSHITA |
| Q15 | 2SC3930(BC) | TRANSISTOR | MATSUSHITA |
| Q16 | 2SD1820(QR) | TRANSISTOR | MATSUSHITA |
| Q17 | 2SK662(QR) | FET | MATSUSHITA |
| Q18 | 2SK662(QR) | FET | MATSUSHITA |
| Q19 | 2SK662(QR) | FET | MATSUSHITA |
| Q20 | 2SK662(QR) | FET | MATSUSHITA |
| Q21 | 2SK662(QR) | FET | MATSUSHITA |
| Q22 | 2SK662(QR) | FET | MATSUSHITA |
| Q23 | 2SD1820(QR) | TRANSISTOR | MATSUSHITA |
| Q24 | 2SC3930(BC) | TRANSISTOR | MATSUSHITA |
| Q25 | 2SC3930(BC) | TRANSISTOR | MATSUSHITA |
| Q26 | 2SC3930(BC) | TRANSISTOR | MATSUSHITA |
| Q27 | 2SA1532(BC) | TRANSISTOR | MATSUSHITA |
| Q28 | 2SK662(QR) | FET | MATSUSHITA |
| Q29 | 2SA1532(BC) | TRANSISTOR | MATSUSHITA |
| Q30 | 2SA1532(BC) | TRANSISTOR | MATSUSHITA |
| Q31 | 2SD1820(QR) | TRANSISTOR | MATSUSHITA |
| Q32 | 2SC3930(BC) | TRANSISTOR | MATSUSHITA |
| Q33 | 2SC3930(BC) | TRANSISTOR | MATSUSHITA |
| Q34 | 2SC3930(BC) | TRANSISTOR | MATSUSHITA |
| Q35 | 2SC3930(BC) | TRANSISTOR | MATSUSHITA |
| Q36 | 2SC3930(BC) | TRANSISTOR | MATSUSHITA |
| Q37 | 2SK662(QR) | FET | MATSUSHITA |
| Q38 | 2SA1532(BC) | TRANSISTOR | MATSUSHITA |
| Q39 | 2SA1532(BC) | TRANSISTOR | MATSUSHITA |
| Q40 | 2SA1532(BC) | TRANSISTOR | MATSUSHITA |
| Q41 | 2SA1532(BC) | TRANSISTOR | MATSUSHITA |
| Q42 | 2SC3930(BC) | TRANSISTOR | MATSUSHITA |
| Q43 | 2SC3930(BC) | TRANSISTOR | MATSUSHITA |
| Q44 | 2SK662(QR) | FET | MATSUSHITA |
| Q45 | 2SC3930(BC) | TRANSISTOR | MATSUSHITA |
| Q46 | 2SC3930(BC) | TRANSISTOR | MATSUSHITA |
| Q47 | DTC124EU | TRANSISTOR | ROHM |
| Q48 | 2SC3930(BC) | TRANSISTOR | MATSUSHITA |
| Q49 | 2SA1532(BC) | TRANSISTOR | MATSUSHITA |
| Q50 | 2SA1532(BC) | TRANSISTOR | MATSUSHITA |
| Q51 | 2SA1532(BC) | TRANSISTOR | MATSUSHITA |

| Symbol No. | Part No. | Part Name | Description | |
|---|---|---|---|---|
| Q52 | 2SC3930(BC) | TRANSISTOR | MATSUSHITA | |
| Q53 | 2SK662(QR) | FET | MATSUSHITA | |
| D1 | HSM88AS | SI DIODE | HITACHI | |
| D2 | HSM88AS | SI DIODE | HITACHI | |
| R1 | NRSA02J-101 | M.G.RESISTOR | 100 | 1/10W |
| R2 | NRSA02J-102 | M.G.RESISTOR | 1.0K | 1/10W |
| R5 | NRSA02J-222 | M.G.RESISTOR | 2.2K | 1/10W |
| R6 | NRSA02J-821 | M.G.RESISTOR | 820 | 1/10W |
| R7 | NRSA02J-563 | M.G.RESISTOR | 56K | 1/10W |
| R8 | NRSA02J-471 | M.G.RESISTOR | 470 | 1/10W |
| R9 | NRSA02J-272 | M.G.RESISTOR | 2.7K | 1/10W |
| R10 | NRSA02J-561 | M.G.RESISTOR | 560 | 1/10W |
| R12 | NRSA02J-472 | M.G.RESISTOR | 4.7K | 1/10W |
| R13 | NRSA02J-822 | M.G.RESISTOR | 8.2K | 1/10W |
| R14 | NRSA02J-102 | M.G.RESISTOR | 1.0K | 1/10W |
| R15 | NRSA02J-183 | M.G.RESISTOR | 18K | 1/10W |
| R16 | NRSA02J-682 | M.G.RESISTOR | 6.8K | 1/10W |
| R17 | NRSA02J-333 | M.G.RESISTOR | 33K | 1/10W |
| R18 | NRSA02J-822 | M.G.RESISTOR | 8.2K | 1/10W |
| R19 | NRSA02J-221 | M.G.RESISTOR | 220 | 1/10W |
| R20 | NRSA02J-105 | M.G.RESISTOR | 1.0M | 1/10W |
| R21 | NRSA02J-822 | M.G.RESISTOR | 8.2K | 1/10W |
| R23 | NRSA02J-102 | M.G.RESISTOR | 1.0K | 1/10W |
| R24 | NRSA02J-102 | M.G.RESISTOR | 1.0K | 1/10W |
| R25 | NRSA02J-222 | M.G.RESISTOR | 2.2K | 1/10W |
| R26 | NRSA02J-102 | M.G.RESISTOR | 1.0K | 1/10W |
| R27 | NRSA02J-471 | M.G.RESISTOR | 470 | 1/10W |
| R28 | NRSA02J-562 | M.G.RESISTOR | 5.6K | 1/10W |
| R29 | NRSA02J-222 | M.G.RESISTOR | 2.2K | 1/10W |
| R30 | NRSA02J-102 | M.G.RESISTOR | 1.0K | 1/10W |
| R34 | NRSA02J-4R7 | M.G.RESISTOR | 4.7 | 1/10W |
| R35 | NRSA02J-4R7 | M.G.RESISTOR | 4.7 | 1/10W |
| R36 | NRSA02J-100 | M.G.RESISTOR | 10 | 1/10W |
| R37 | NRSA02J-151 | M.G.RESISTOR | 150 | 1/10W |
| R38 | NRSA02J-123 | M.G.RESISTOR | 12K | 1/10W |
| R39 | NRSA02J-153 | M.G.RESISTOR | 15K | 1/10W |
| R40 | NRSA02J-470 | M.G.RESISTOR | 47 | 1/10W |
| R41 | NRSA02J-334 | M.G.RESISTOR | 330K | 1/10W |
| R43 | NRSA02J-121 | M.G.RESISTOR | 120 | 1/10W |
| R45 | NRSA02J-470 | M.G.RESISTOR | 47 | 1/10W |
| R46 | NRSA02J-222 | M.G.RESISTOR | 2.2K | 1/10W |
| R47 | NRSA02J-472 | M.G.RESISTOR | 4.7K | 1/10W |
| R48 | NRSA02J-331 | M.G.RESISTOR | 330 | 1/10W |
| R50 | NRSA02J-222 | M.G.RESISTOR | 2.2K | 1/10W |
| R51 | NRSA02J-103 | M.G.RESISTOR | 10K | 1/10W |
| R52 | NRSA02J-103 | M.G.RESISTOR | 10K | 1/10W |
| R54 | NRSA02J-332 | M.G.RESISTOR | 3.3K | 1/10W |
| R55 | NRSA02J-101 | M.G.RESISTOR | 100 | 1/10W |
| R56 | NRSA02J-222 | M.G.RESISTOR | 2.2K | 1/10W |
| R57 | NRSA02J-681 | M.G.RESISTOR | 680 | 1/10W |
| R58 | NRSA02J-333 | M.G.RESISTOR | 33K | 1/10W |
| R59 | NRSA02J-333 | M.G.RESISTOR | 33K | 1/10W |
| R60 | NRSA02J-333 | M.G.RESISTOR | 33K | 1/10W |
| R61 | NRSA02J-333 | M.G.RESISTOR | 33K | 1/10W |
| R62 | NRSA02J-333 | M.G.RESISTOR | 33K | 1/10W |
| R63 | NRSA02J-333 | M.G.RESISTOR | 33K | 1/10W |

| Symbol No. | Part No. | Part Name | Description | |
|---|---|---|---|---|
| R64 | NRSA02J-333 | M.G.RESISTOR | 33K | 1/10W |
| R65 | NRSA02J-563 | M.G.RESISTOR | 56K | 1/10W |
| R66 | NRSA02J-563 | M.G.RESISTOR | 56K | 1/10W |
| R67 | NRSA02J-563 | M.G.RESISTOR | 56K | 1/10W |
| R68 | NRSA02J-102 | M.G.RESISTOR | 1.0K | 1/10W |
| R69 | NRSA02J-682 | M.G.RESISTOR | 6.8K | 1/10W |
| R70 | NRSA02J-153 | M.G.RESISTOR | 15K | 1/10W |
| R71 | NRSA02J-222 | M.G.RESISTOR | 2.2K | 1/10W |
| R72 | NRSA02J-0R0 | M.G.RESISTOR | 0 | 1/10W |
| R73 | NRSA02J-0R0 | M.G.RESISTOR | 0 | 1/10W |
| R76 | NRSA02J-4R7 | M.G.RESISTOR | 4.7 | 1/10W |
| R77 | NRSA02J-4R7 | M.G.RESISTOR | 4.7 | 1/10W |
| R78 | NRSA02J-100 | M.G.RESISTOR | 10 | 1/10W |
| R79 | NRSA02J-680 | M.G.RESISTOR | 68 | 1/10W |
| R80 | NRSA02J-470 | M.G.RESISTOR | 47 | 1/10W |
| R81 | NRSA02J-470 | M.G.RESISTOR | 47 | 1/10W |
| R82 | NRSA02J-101 | M.G.RESISTOR | 100 | 1/10W |
| R83 | NRSA02J-334 | M.G.RESISTOR | 330K | 1/10W |
| R84 | NRSA02J-680 | M.G.RESISTOR | 68 | 1/10W |
| R85 | NRSA02J-101 | M.G.RESISTOR | 100 | 1/10W |
| R86 | NRSA02J-472 | M.G.RESISTOR | 4.7K | 1/10W |
| R87 | NRSA02J-472 | M.G.RESISTOR | 4.7K | 1/10W |
| R88 | NRSA02J-331 | M.G.RESISTOR | 330 | 1/10W |
| R90 | NRSA02J-103 | M.G.RESISTOR | 10K | 1/10W |
| R91 | NRSA02J-103 | M.G.RESISTOR | 10K | 1/10W |
| R92 | NRSA02J-222 | M.G.RESISTOR | 2.2K | 1/10W |
| R94 | NRSA02J-101 | M.G.RESISTOR | 100 | 1/10W |
| R95 | NRSA02J-332 | M.G.RESISTOR | 3.3K | 1/10W |
| R96 | NRSA02J-123 | M.G.RESISTOR | 12K | 1/10W |
| R97 | NRSA02J-392 | M.G.RESISTOR | 3.9K | 1/10W |
| R98 | NRSA02J-222 | M.G.RESISTOR | 2.2K | 1/10W |
| R99 | NRSA02J-472 | M.G.RESISTOR | 4.7K | 1/10W |
| R100 | NRSA02J-222 | M.G.RESISTOR | 2.2K | 1/10W |
| R101 | NRSA02J-472 | M.G.RESISTOR | 4.7K | 1/10W |
| R102 | NRSA02J-102 | M.G.RESISTOR | 1.0K | 1/10W |
| R103 | NRSA02J-102 | M.G.RESISTOR | 1.0K | 1/10W |
| R104 | NRSA02J-103 | M.G.RESISTOR | 10K | 1/10W |
| R105 | NRSA02J-122 | M.G.RESISTOR | 1.2K | 1/10W |
| R106 | NRSA02J-392 | M.G.RESISTOR | 3.9K | 1/10W |
| R107 | NRSA02J-562 | M.G.RESISTOR | 5.6K | 1/10W |
| R108 | NRSA02J-152 | M.G.RESISTOR | 1.5K | 1/10W |
| R109 | NRSA02J-222 | M.G.RESISTOR | 2.2K | 1/10W |
| R110 | NRSA02J-152 | M.G.RESISTOR | 1.5K | 1/10W |
| R111 | NRSA02J-562 | M.G.RESISTOR | 5.6K | 1/10W |
| R112 | NRSA02J-222 | M.G.RESISTOR | 2.2K | 1/10W |
| R113 | NRSA02J-471 | M.G.RESISTOR | 470 | 1/10W |
| R114 | NRSA02J-333 | M.G.RESISTOR | 33K | 1/10W |
| R115 | NRSA02J-272 | M.G.RESISTOR | 2.7K | 1/10W |
| R116 | NRSA02J-103 | M.G.RESISTOR | 10K | 1/10W |
| R117 | NRSA02J-152 | M.G.RESISTOR | 1.5K | 1/10W |
| R119 | NRSA02J-683 | M.G.RESISTOR | 68K | 1/10W |
| R120 | NRSA02J-682 | M.G.RESISTOR | 6.8K | 1/10W |
| R121 | NRSA02J-562 | M.G.RESISTOR | 5.6K | 1/10W |
| R122 | NRSA02J-682 | M.G.RESISTOR | 6.8K | 1/10W |
| R123 | NRSA02J-222 | M.G.RESISTOR | 2.2K | 1/10W |
| R124 | NRSA02J-122 | M.G.RESISTOR | 1.2K | 1/10W |
| R125 | NRSA02J-561 | M.G.RESISTOR | 560 | 1/10W |
| R126 | NRSA02J-332 | M.G.RESISTOR | 3.3K | 1/10W |
| R127 | NRSA02J-561 | M.G.RESISTOR | 560 | 1/10W |

| Symbol No. | Part No. | Part Name | Description | |
|---|---|---|---|---|
| R128 | NRSA02J-272 | M.G.RESISTOR | 2.7K | 1/10W |
| R129 | NRSA02J-101 | M.G.RESISTOR | 100 | 1/10W |
| R130 | NRSA02J-562 | M.G.RESISTOR | 5.6K | 1/10W |
| R131 | NRSA02J-273 | M.G.RESISTOR | 27K | 1/10W |
| R132 | NRSA02J-472 | M.G.RESISTOR | 4.7K | 1/10W |
| R133 | NRSA02J-682 | M.G.RESISTOR | 6.8K | 1/10W |
| R134 | NRSA02J-222 | M.G.RESISTOR | 2.2K | 1/10W |
| R135 | NRSA02J-152 | M.G.RESISTOR | 1.5K | 1/10W |
| R137 | NRSA02J-0R0 | M.G.RESISTOR | 0 | 1/10W |
| R138 | NRSA02J-102 | M.G.RESISTOR | 1.0K | 1/10W |
| R139 | NRSA02J-561 | M.G.RESISTOR | 560 | 1/10W |
| R140 | NRSA02J-102 | M.G.RESISTOR | 1.0K | 1/10W |
| R141 | NRSA02J-561 | M.G.RESISTOR | 560 | 1/10W |
| R142 | NRSA02J-102 | M.G.RESISTOR | 1.0K | 1/10W |
| R143 | NRSA02J-103 | M.G.RESISTOR | 10K | 1/10W |
| R144 | NRSA02J-223 | M.G.RESISTOR | 22K | 1/10W |
| R145 | NRSA02J-471 | M.G.RESISTOR | 470 | 1/10W |
| R146 | NRSA02J-471 | M.G.RESISTOR | 470 | 1/10W |
| R147 | NRSA02J-223 | M.G.RESISTOR | 22K | 1/10W |
| R148 | NRSA02J-103 | M.G.RESISTOR | 10K | 1/10W |
| R149 | NRSA02J-103 | M.G.RESISTOR | 10K | 1/10W |
| R150 | NRSA02J-0R0 | M.G.RESISTOR | 0 | 1/10W |
| R151 | NRSA02J-101 | M.G.RESISTOR | 100 | 1/10W |
| R152 | NRSA02J-472 | M.G.RESISTOR | 4.7K | 1/10W |
| R153 | NRSA02J-332 | M.G.RESISTOR | 3.3K | 1/10W |
| R154 | NRSA02J-683 | M.G.RESISTOR | 68K | 1/10W |
| R155 | NRSA02J-223 | M.G.RESISTOR | 22K | 1/10W |
| R156 | NRSA02J-183 | M.G.RESISTOR | 18K | 1/10W |
| R157 | NRSA02J-332 | M.G.RESISTOR | 3.3K | 1/10W |
| R158 | NRSA02J-332 | M.G.RESISTOR | 3.3K | 1/10W |
| R159 | NRSA02J-681 | M.G.RESISTOR | 680 | 1/10W |
| R160 | NRSA02J-332 | M.G.RESISTOR | 3.3K | 1/10W |
| R161 | NRSA02J-822 | M.G.RESISTOR | 8.2K | 1/10W |
| R162 | NRSA02J-103 | M.G.RESISTOR | 10K | 1/10W |
| R163 | NRSA02J-103 | M.G.RESISTOR | 10K | 1/10W |
| R164 | NRSA02J-471 | M.G.RESISTOR | 470 | 1/10W |
| R165 | NRSA02J-392 | M.G.RESISTOR | 3.9K | 1/10W |
| R166 | NRSA02J-392 | M.G.RESISTOR | 3.9K | 1/10W |
| R167 | NRSA02J-561 | M.G.RESISTOR | 560 | 1/10W |
| R168 | NRSA02J-562 | M.G.RESISTOR | 5.6K | 1/10W |
| R169 | NRSA02J-222 | M.G.RESISTOR | 2.2K | 1/10W |
| R170 | NRSA02J-221 | M.G.RESISTOR | 220 | 1/10W |
| R171 | NRSA02J-102 | M.G.RESISTOR | 1.0K | 1/10W |
| R172 | NRSA02J-223 | M.G.RESISTOR | 22K | 1/10W |
| R174 | NRSA02J-221 | M.G.RESISTOR | 220 | 1/10W |
| R175 | NRSA02J-682 | M.G.RESISTOR | 6.8K | 1/10W |
| R176 | NRSA02J-153 | M.G.RESISTOR | 15K | 1/10W |
| R177 | NRSA02J-153 | M.G.RESISTOR | 15K | 1/10W |
| R178 | NRSA02J-101 | M.G.RESISTOR | 100 | 1/10W |
| R179 | NRSA02J-101 | M.G.RESISTOR | 100 | 1/10W |
| R180 | NRSA02J-222 | M.G.RESISTOR | 2.2K | 1/10W |
| R181 | NRSA02J-471 | M.G.RESISTOR | 470 | 1/10W |
| R182 | NRSA02J-222 | M.G.RESISTOR | 2.2K | 1/10W |
| R183 | NRSA02J-222 | M.G.RESISTOR | 2.2K | 1/10W |
| R185 | NRSA02J-472 | M.G.RESISTOR | 4.7K | 1/10W |
| R188 | NRSA02J-392 | M.G.RESISTOR | 3.9K | 1/10W |
| R189 | NRSA02J-0R0 | M.G.RESISTOR | 0 | 1/10W |
| R190 | NRSA02J-0R0 | M.G.RESISTOR | 0 | 1/10W |

| Symbol No. | Part No. | Part Name | Description | |
|---|---|---|---|---|
| VR1 | NVP1416-202 | V.RESISTOR | 2K | G OUT GAIN |
| VR2 | NVP1416-202 | V.RESISTOR | 2K | VCC BAL |
| VR3 | NVP1416-202 | V.RESISTOR | 2K | V LEVEL |
| VR4 | NVP1416-502 | V RESISTOR | 5K | H LEVEL |
| VR5 | NVP1416-502 | V RESISTOR | 5K | NOISE SLICE |
| VR6 | NVP1416-202 | V.RESISTOR | 2K | M.CC LEVEL |
| VR7 | NVP1416-502 | V RESISTOR | 5K | LEVEL DEPEND |
| C1 | NEA10JM-337 | E CAP | 330 | 6.3V |
| C2 | NCF21EZ-104 | C CAP | 0.10 | 25V |
| C3 | NEA11AM-227 | E CAP | 220 | 10V |
| C4 | NCF21EZ-104 | C CAP | 0.10 | 25V |
| C5 | NEF11DM-684 | T CAP | 0.68 | 20V |
| C6 | NCT03CH-470 | C CAP | 47P | 50V |
| C7 | NEA11AM-336 | E CAP | 33 | 10V |
| C8 | NEA11AM-336 | E CAP | 33 | 10V |
| C9 | NCT03CH-220 | C CAP | 22P | 50V |
| C10 | NCT03CH-120 | C CAP | 12P | 50V |
| C11 | NCT03CH-220 | C CAP | 22P | 50V |
| C12 | NCF21EZ-104 | C CAP | 0.10 | 25V |
| C13 | NCF21EZ-104 | C CAP | 0.10 | 25V |
| C14 | NCF21EZ-104 | C CAP | 0.10 | 25V |
| C16 | NCF21EZ-104 | C CAP | 0.10 | 25V |
| C17 | NEF11CM-106 | TA E CAP | 10 | 16V |
| C18 | NEF11CM-106 | TA E CAP | 10 | 16V |
| C19 | NCT03CH-120 | C CAP | 12P | 50V |
| C20 | NCT03CH-120 | C CAP | 12P | 50V |
| C21 | NCF21EZ-104 | C CAP | 0.10 | 25V |
| C22 | NEA10JM-107 | E CAP | 100 | 6.3V |
| C23 | NEF11DM-684 | T CAP | 0.68 | 20V |
| C24 | NEF11DM-684 | T CAP | 0.68 | 20V |
| C25 | NEF11DM-684 | T CAP | 0.68 | 20V |
| C26 | NEN11HM-105 | NP E CAP | 1.0 | 50V |
| C27 | NEF11EM-475 | T CAP | 4.7 | 25V |
| C28 | NEN11HM-105 | NP E CAP | 1.0 | 50V |
| C29 | NCF21EZ-104 | C CAP | 0.10 | 25V |
| C30 | NCF21EZ-104 | C CAP | 0.10 | 25V |
| C31 | NCF21EZ-104 | C CAP | 0.10 | 25V |
| C32 | NCF21EZ-104 | C CAP | 0.10 | 25V |
| C33 | NCF21EZ-104 | C CAP | 0.10 | 25V |
| C35 | NCF21EZ-104 | C CAP | 0.10 | 25V |
| C36 | NEF11CM-106 | TA E CAP | 10 | 16V |
| C37 | NEF11CM-106 | TA E CAP | 10 | 16V |
| C38 | NCT03CH-100 | C CAP | 10P | 50V |
| C39 | NCT03CH-100 | C CAP | 10P | 50V |
| C41 | NCF21EZ-104 | C CAP | 0.10 | 25V |
| C42 | NCT03CH-101 | C CAP | 100P | 50V |
| C43 | NCT03CH-220 | C CAP | 22P | 50V |
| C44 | NEA11AM-336 | E CAP | 33 | 10V |
| C45 | NCF21EZ-104 | C CAP | 0.10 | 25V |
| C46 | NEF11DM-684 | T CAP | 0.68 | 20V |
| C47 | NEF11EM-475 | T CAP | 4.7 | 25V |
| C48 | NEA11AM-336 | E CAP | 33 | 10V |
| C49 | NEA10JM-337 | E CAP | 330 | 6.3V |
| C50 | NEF11EM-475 | T CAP | 4.7 | 25V |
| C51 | NCT03CH-100 | C CAP | 10P | 50V |
| C52 | NCF21EZ-104 | C CAP | 0.10 | 25V |
| C53 | NCT03CH-100 | C CAP | 10P | 50V |
| C54 | NCF21EZ-104 | C CAP | 0.10 | 25V |

| Symbol No. | Part No. | Part Name | Description | |
|---|---|---|---|---|
| C55 | NCF21EZ-104 | C CAP | 0.10 | 25V |
| C57 | NCF21EZ-104 | C CAP | 0.10 | 25V |
| C58 | NEA11AM-336 | E CAP | 33 | 10V |
| C59 | NEA11AM-336 | E CAP | 33 | 10V |
| C60 | NEA11AM-336 | E CAP | 33 | 10V |
| C61 | NEA11CM-226 | E .CA | 22 | 16V |
| C62 | NCF21EZ-104 | C CAP | 0.10 | 25V |
| C63 | NEN11AM-106 | NP CAP | 10 | 10V |
| C64 | NEA11CM-226 | E CAP | 22 | 16V |
| C65 | NEN11HM-105 | NP E CAP | 1.0 | 50V |
| C66 | NCT03CH-470 | C CAP | 47P | 50V |
| C67 | NCT03CH-330 | C CAP | 33P | 50V |
| C68 | NCT03CH-390 | C CAP | 39P | 50V |
| C69 | NCF21EZ-104 | C CAP | 0.10 | 25V |
| C70 | NCF21EZ-104 | C CAP | 0.10 | 25V |
| C71 | NEA11EM-106 | E CAP | 10 | 25V |
| C72 | NEA11EM-106 | E CAP | 10 | 25V |
| C73 | NCB21HK-102 | C CAP | 1000P | 50V |
| C74 | NCF21EZ-104 | C CAP | 0.10 | 25V |
| C75 | NEA10JM-107 | E CAP | 100 | 6.3V |
| C76 | NCF21EZ-104 | C CAP | 0.10 | 25V |
| C77 | NCF21EZ-104 | C CAP | 0.10 | 25V |
| C78 | NCF21EZ-104 | C CAP | 0.10 | 25V |
| C79 | NCF21EZ-104 | C CAP | 0.10 | 25V |
| C80 | NEA11AM-336 | E CAP | 33 | 10V |
| C81 | NEF11DM-684 | T CAP | 0.68 | 20V |
| C82 | NCT03CH-330 | C CAP | 33P | 50V |
| C83 | NCF21EZ-104 | C CAP | 0.10 | 25V |
| C84 | NCF21EZ-104 | C CAP | 0.10 | 25V |
| L1 | SSV1330-150 | COIL | 15μH | |
| L2 | SCV1950-2R2 | PEAKING COIL | 2.2μH | |
| L3 | SCV1950-120 | PEAKING COIL | 12μH | |
| L4 | SCV1950-120 | PEAKING COIL | 12μH | |
| L5 | SCV1950-121 | PEAKING COIL | 120μH | |
| L6 | SCV1950-330 | PEAKING COIL | 33μH | |
| L7 | SCV1950-330 | PEAKING COIL | 33μH | |
| L8 | SSV1330-150 | COIL | 15μH | |
| DL1 | SCV1810-001 | DELAY LINE | 63.577μsec | |
| DL2 | SCV1253-001 | DELAY LINE | 140nsec | |
| CN33 | SCV1770-003 | CONNECTOR | 3PIN | |
| CN36 | SCV1849-016 | CONNECTOR | 16PIN | |
| TP1 | SSV1096-001 | TEST POINT | | |
| TP2 | SSV1096-001 | TEST POINT | | |
| TP3 | SSV1096-001 | TEST POINT | | |
| TP4 | SSV1096-001 | TEST POINT | | |
| TP5 | SSV1096-001 | TEST POINT | | |

## 7.10 SE board assembly list [1][0]
**for U version 〈SCK2308-03-N0A〉**
**for E version 〈SCK2308-03-P0A〉** [1][0]□□□□□□□

| Symbol No. | Part No. | Part Name | Description | |
|---|---|---|---|---|
| IC1 | TC4S69F | I.C.(M) | TOSHIBA | |
| IC2 | TC7S00F | I.C.(M) | TOSHIBA | (U) |
| IC3 | RC062M | I.C.(M) | JRC | |
| IC4 | MC14053BF | I.C.(M) | MOTOROLA | |
| IC5 | TC50H000F | I.C.(M) | TOSHIBA | |
| IC6 | TC4S81F | I.C.(M) | TOSHIBA | |
| IC7 | AD847JR | I.C.(M) | ANALOG DIVAICES | |
| IC8 | AD847JR | I.C.(M) | ANALOG DIVAICES | |
| IC9 | AD847JR | I.C.(M) | ANALOG DIVAICES | |
| IC10 | UPC812G2 | I.C.(M) | NEC | |
| IC11 | UPC812G2 | I.C.(M) | NEC | |
| IC12 | AN2020S | I.C.(M) | MATSUSHITA | |
| IC13 | AD847JR | I.C.(M) | ANALOG DIVAICES | |
| IC14 | MC14053BF | I.C.(M) | MOTOROLA | |
| IC15 | JCS0001 | I.C.(M) | JVC | |
| IC16 | JCS0002 | I.C.(M) | JVC | |
| IC17 | MC74HC14AF | I.C.(M) | MOTOROLA | |
| IC18 | TC40H008F | I.C.(M) | TOSHIBA | |
| IC19 | TC40H008F | I.C.(M) | TOSHIBA | |
| IC20 | TC50H001F | I.C.(M) | TOSHIBA | |
| IC21 | TC7SU04F | I.C.(M) | TOSHIBA | |
| IC22 | TC7SU04F | I.C.(M) | TOSHIBA | |
| IC23 | MC14053BF | I.C.(M) | MOTOROLA | |
| IC24 | RC062M | I.C.(M) | JRC | |
| IC25 | TC4S66F | I.C.(M) | TOSHIBA | (E) |
| IC26 | UPC812G2 | I.C.(M) | NEC | |
| IC27 | MC74HC4538F | I.C.(M) | MOTOROLA | |
| IC28 | AN6367S | I.C.(M) | MATSUSHITA | |
| IC29 | NJM319M | I.C.(M) | JRC | |
| IC30 | TC4S81F | I.C.(M) | TOSHIBA | |
| IC31 | MC14577BF | I.C.(M) | MOTOROLA | |
| IC32 | TC4S69F | I.C.(M) | TOSHIBA | |
| IC33 | TC7SU04F | I.C.(M) | TOSHIBA | |
| IC34 | TC7SU04F | I.C.(M) | TOSHIBA | |
| IC35 | TC7S08F | I.C.(M) | TOSHIBA | |
| IC36 | TC7SU04F | I.C.(M) | TOSHIBA | (E) |
| IC37 | MC14577BF | I.C.(M) | MOTOROLA | |
| IC38 | TC7SU04F | I.C.(M) | TOSHIBA | (E) |
| Q1 | 2SA1748(QR) | TRANSISTOR | MATSUSHITA | |
| Q2 | 2SA1748(QR) | TRANSISTOR | MATSUSHITA | |
| Q3 | 2SC4562(QR) | TRANSISTOR | MATSUSHITA | |
| Q4 | 2SA1748(QR) | TRANSISTOR | MATSUSHITA | |
| Q5 | 2SA1748(QR) | TRANSISTOR | MATSUSHITA | |
| Q6 | 2SC4562(QR) | TRANSISTOR | MATSUSHITA | |
| Q7 | 2SA1748(QR) | TRANSISTOR | MATSUSHITA | |
| Q8 | 2SA1748(QR) | TRANSISTOR | MATSUSHITA | |
| Q9 | 2SC4562(QR) | TRANSISTOR | MATSUSHITA | |
| Q10 | 2SK198(Q.R) | F.E.T. | MATSUSHITA | (U) |
| Q11 | 2SK198(Q.R) | F.E.T. | MATSUSHITA | (U) |
| Q12 | 2SJ84(Q.R) | FET | MATSUSHITA | (U) |
| Q13 | 2SA1748(QR) | TRANSISTOR | MATSUSHITA | |
| Q14 | 2SB1219(QR) | TRANSISTOR | MATSUSHITA | |
| Q15 | 2SD1820(QR) | TRANSISTOR | MATSUSHITA | |
| Q16 | 2SD1820(QR) | TRANSISTOR | MATSUSHITA | |
| Q17 | 2SC4562(QR) | TRANSISTOR | MATSUSHITA | |
| Q18 | DTA124EU | D.TRANSISTER | ROHM | |
| Q19 | DTC124EU | TRANSISTOR | ROHM | |
| Q20 | 2SA1748(QR) | TRANSISTOR | MATSUSHITA | |

| Symbol No. | Part No. | Part Name | Description | |
|---|---|---|---|---|
| Q21 | 2SA1748(QR) | TRANSISTOR | MATSUSHITA | |
| Q22 | 2SA1748(QR) | TRANSISTOR | MATSUSHITA | |
| Q23 | 2SC4562(QR) | TRANSISTOR | MATSUSHITA | |
| Q28 | XN4509 | TRANSISTOR | MATSUSHITA | |
| Q29 | 2SC4562(QR) | TRANSISTOR | MATSUSHITA | |
| Q30 | XN4509 | TRANSISTOR | MATSUSHITA | |
| Q31 | XN4509 | TRANSISTOR | MATSUSHITA | |
| Q32 | 2SK198(Q.R) | F.E.T. | MATSUSHITA | |
| Q33 | 2SK198(Q.R) | F.E.T. | MATSUSHITA | |
| Q34 | 2SK198(Q.R) | F.E.T. | MATSUSHITA | |
| Q35 | 2SK198(Q.R) | F.E.T. | MATSUSHITA | |
| Q36 | XN4509 | TRANSISTOR | MATSUSHITA | |
| Q37 | 2SC4562(QR) | TRANSISTOR | MATSUSHITA | |
| Q38 | XN4509 | TRANSISTOR | MATSUSHITA | |
| Q39 | 2SC4562(QR) | TRANSISTOR | MATSUSHITA | |
| Q40 | 2SC4562(QR) | TRANSISTOR | MATSUSHITA | |
| Q41 | XN4509 | TRANSISTOR | MATSUSHITA | |
| Q42 | XN4509 | TRANSISTOR | MATSUSHITA | |
| Q43 | 2SJ84(Q.R) | FET | MATSUSHITA | |
| Q44 | 2SA1748(QR) | TRANSISTOR | MATSUSHITA | |
| Q45 | XN4509 | TRANSISTOR | MATSUSHITA | |
| Q46 | 2SC4562(QR) | TRANSISTOR | MATSUSHITA | |
| Q47 | 2SC4562(QR) | TRANSISTOR | MATSUSHITA | |
| Q48 | 2SB1219(QR) | TRANSISTOR | MATSUSHITA | |
| Q49 | 2SD1820(QR) | TRANSISTOR | MATSUSHITA | |
| Q50 | DTC124EU | TRANSISTOR | ROHM | |
| Q51 | DTA124EU | D.TRANSISTER | ROHM | |
| Q52 | 2SJ84(Q.R) | FET | MATSUSHITA | |
| Q53 | 2SJ84(Q.R) | FET | MATSUSHITA | |
| Q54 | 2SJ84(Q.R) | FET | MATSUSHITA | |
| Q57 | 2SD1820(QR) | TRANSISTOR | MATSUSHITA | (E) |
| Q58 | 2SC4562(QR) | TRANSISTOR | MATSUSHITA | |
| Q59 | 2SA1748(QR) | TRANSISTOR | MATSUSHITA | |
| Q60 | 2SA1748(QR) | TRANSISTOR | MATSUSHITA | |
| Q61 | 2SA1748(QR) | TRANSISTOR | MATSUSHITA | |
| D1 | MA335 | SI DIODE | MATSUSHITA | |
| D2 | MA335 | SI DIODE | MATSUSHITA | |
| D3 | MA335 | SI DIODE | MATSUSHITA | |
| D4 | MA143A | SI DIODE | MATSUSHITA | |
| D5 | MA335 | SI DIODE | MATSUSHITA | |
| D6 | MA143A | SI DIODE | MATSUSHITA | |
| D7 | MA143A | SI DIODE | MATSUSHITA | |
| R1 | NRVA02D-222 | MFR | 2.2K | 1/10W |
| R2 | NRVA02D-222 | MFR | 2.2K | 1/10W |
| R3 | NRVA02D-222 | MFR | 2.2K | 1/10W |
| R4 | NRVA02D-102 | MFR | 1.0K | 1/10W |
| R5 | NRVA02D-222 | MFR | 2.2K | 1/10W |
| R6 | NRVA02D-222 | MFR | 2.2K | 1/10W |
| R7 | NRVA02D-222 | MFR | 2.2K | 1/10W |
| R8 | NRVA02D-102 | MFR | 1.0K | 1/10W |
| R9 | NRVA02D-222 | MFR | 2.2K | 1/10W |
| R10 | NRVA02D-222 | MFR | 2.2K | 1/10W |
| R11 | NRVA02D-222 | MFR | 2.2K | 1/10W |
| R12 | NRVA02D-102 | MFR | 1.0K | 1/10W |
| R13 | NRVA02D-122 | MFR | 1.2K | 1/10W (U) |
| | NRVA02D-103 | MFR | 10K | 1/10W (E) |
| R14 | NRVA02D-823 | MFR | 82K | 1/10W (U) |

| Symbol No. | Part No. | Part Name | Description | |
|---|---|---|---|---|
| R15 | NRVA02D-823 | MFR | 82K | 1/10W (U) |
| R16 | NRVA02D-273 | MFR | 27K | 1/10W (U) |
| | NRVA02D-272 | MFR | 2.7K | 1/10W (E) |
| R17 | NRVA02D-332 | MFR | 3.3K | 1/10W (U) |
| | NRVA02D-221 | MFR | 220 | 1/10W (E) |
| R18 | NRVA02D-561 | MFR | 560 | 1/10W |
| R19 | NRVA02D-105 | MFR | 1.0M | 1/10W (U) |
| R20 | NRVA02D-105 | MFR | 1.0M | 1/10W (U) |
| R21 | NRVA02D-153 | MFR | 15K | 1/10W (U) |
| R22 | NRVA02D-103 | MFR | 10K | 1/10W (U) |
| R23 | NRVA02D-105 | MFR | 1.0M | 1/10W (U) |
| R24 | NRVA02D-102 | MFR | 1.0K | 1/10W |
| R25 | NRVA02D-102 | MFR | 1.0K | 1/10W |
| R26 | NRVA02D-562 | MFR | 5.6K | 1/10W |
| R27 | NRVA02D-102 | MFR | 1.0K | 1/10W |
| R28 | NRVA02D-223 | MFR | 22K | 1/10W |
| R29 | NRVA02D-333 | MFR | 33K | 1/10W |
| R32 | NRVA02D-333 | MFR | 33K | 1/10W |
| R33 | NRVA02D-223 | MFR | 22K | 1/10W |
| R34 | NRVA02D-334 | MFR | 330K | 1/10W |
| R35 | NRVA02D-561 | MFR | 560 | 1/10W |
| R36 | NRVA02D-101 | MFR | 100 | 1/10W |
| R37 | NRVA02D-222 | MFR | 2.2K | 1/10W |
| R38 | NRVA02D-101 | MFR | 100 | 1/10W |
| R39 | NRVA02D-222 | MFR | 2.2K | 1/10W |
| R40 | NRVA02D-101 | MFR | 100 | 1/10W |
| R41 | NRVA02D-222 | MFR | 2.2K | 1/10W |
| R42 | NRVA02D-562 | MFR | 5.6K | 1/10W |
| R43 | NRVA02D-122 | MFR | 1.2K | 1/10W |
| R44 | NRVA02D-822 | MFR | 8.2K | 1/10W |
| R45 | NRVA02D-561 | MFR | 560 | 1/10W |
| R46 | NRVA02D-152 | MFR | 1.5K | 1/10W |
| R47 | NRVA02D-472 | MFR | 4.7K | 1/10W |
| R48 | NRVA02D-333 | MFR | 33K | 1/10W |
| R49 | NRVA02D-123 | MFR | 12K | 1/10W |
| R50 | NRVA02D-562 | MFR | 5.6K | 1/10W |
| R51 | NRVA02D-274 | MFR | 270K | 1/10W (U) |
| R52 | NRVA02D-334 | MFR | 330K | 1/10W (U) |
| R53 | NRVA02D-472 | MFR | 4.7K | 1/10W (U) |
| | NRVA02D-562 | MFR | 5.6K | 1/10W (E) |
| R54 | NRVA02D-224 | MFR | 220K | 1/10W (U) |
| | NRVA02D-563 | MFR | 56K | 1/10W (E) |
| R56 | NRVA02D-272 | MFR | 2.7K | 1/10W |
| R57 | NRVA02D-123 | MFR | 12K | 1/10W |
| R58 | NRVA02D-563 | MFR | 56K | 1/10W (U) |
| | NRVA02D-103 | MFR | 10K | 1/10W (E) |
| R59 | NRVA02D-152 | MFR | 1.5K | 1/10W (U) |
| | NRVA02D-182 | MFR | 1.8K | 1/10W (E) |
| R60 | NRVA02D-472 | MFR | 4.7K | 1/10W |
| R61 | NRVA02D-124 | MFR | 120K | 1/10W |
| R62 | NRVA02D-562 | MFR | 5.6K | 1/10W |
| R63 | NRVA02D-562 | MFR | 5.6K | 1/10W |
| R64 | NRVA02D-223 | MFR | 22K | 1/10W (U) |
| | NRVA02D-472 | MFR | 4.7K | 1/10W (E) |
| R65 | NRVA02D-102 | MFR | 1.0K | 1/10W (U) |
| | NRVA02D-821 | MFR | 820 | 1/10W (E) |
| R66 | NRVA02D-682 | MFR | 6.8K | 1/10W (U) |
| | NRVA02D-152 | MFR | 1.5K | 1/10W (E) |
| R67 | NRVA02D-222 | MFR | 2.2K | 1/10W (U) |
| | NRVA02D-152 | MFR | 1.5K | 1/10W (E) |

| Symbol No. | Part No. | Part Name | Description | |
|---|---|---|---|---|
| R68 | NRVA02D-223 | MFR | 22K | 1/10W |
| R69 | NRVA02D-154 | MFR | 150K | 1/10W |
| R70 | NRVA02D-392 | MFR | 3.9K | 1/10W |
| R71 | NRVA02D-393 | MFR | 39K | 1/10W |
| R72 | NRVA02D-562 | MFR | 5.6K | 1/10W |
| R73 | NRVA02D-562 | MFR | 5.6K | 1/10W |
| R74 | NRVA02D-122 | MFR | 1.2K | 1/10W (U) |
| | NRVA02D-152 | MFR | 1.5K | 1/10W (E) |
| R75 | NRVA02D-102 | MFR | 1.0K | 1/10W (U) |
| | NRVA02D-821 | MFR | 820 | 1/10W (E) |
| R76 | NRVA02D-102 | MFR | 1.0K | 1/10W |
| R77 | NRVA02D-102 | MFR | 1.0K | 1/10W |
| R78 | NRSA02J-0R0 | MGR | 0 | 1/10W |
| R79 | NRVA02D-472 | MFR | 4.7K | 1/10W |
| R80 | NRVA02D-153 | MFR | 15K | 1/10W |
| R81 | NRVA02D-222 | MFR | 2.2K | 1/10W |
| R82 | NRVA02D-333 | MFR | 33K | 1/10W |
| R83 | NRVA02D-333 | MFR | 33K | 1/10W |
| R84 | NRSA02J-0R0 | MGR | 0 | 1/10W (E) |
| R85 | NRVA02D-472 | MFR | 4.7K | 1/10W (U) |
| | NRVA02D-392 | MFR | 3.9K | 1/10W (E) |
| R86 | NRVA02D-223 | MFR | 22K | 1/10W (U) |
| | NRVA02D-333 | MFR | 33K | 1/10W (E) |
| R87 | NRVA02D-222 | MFR | 2.2K | 1/10W |
| R88 | NRVA02D-472 | MFR | 4.7K | 1/10W |
| R89 | NRVA02D-392 | MFR | 3.9K | 1/10W |
| R90 | NRVA02D-152 | MFR | 1.5K | 1/10W |
| R91 | NRVA02D-821 | MFR | 820 | 1/10W |
| R92 | NRVA02D-682 | MFR | 6.8K | 1/10W |
| R93 | NRVA02D-823 | MFR | 82K | 1/10W (E) |
| R94 | NRVA02D-182 | MFR | 1.8K | 1/10W (U) |
| | NRVA02D-102 | MFR | 1.0K | 1/10W (E) |
| R95 | NRVA02D-392 | MFR | 3.9K | 1/10W (E) |
| R96 | NRVA02D-333 | MFR | 33K | 1/10W (E) |
| R97 | NRVA02D-152 | MFR | 1.5K | 1/10W |
| R98 | NRVA02D-152 | MFR | 1.5K | 1/10W |
| R99 | NRVA02D-103 | MFR | 10K | 1/10W |
| R100 | NRVA02D-392 | MFR | 3.9K | 1/10W |
| R101 | NRVA02D-152 | MFR | 1.5K | 1/10W |
| R102 | NRVA02D-821 | MFR | 820 | 1/10W |
| R103 | NRVA02D-682 | MFR | 6.8K | 1/10W |
| R104 | NRVA02D-333 | MFR | 33K | 1/10W |
| R105 | NRVA02D-102 | MFR | 1.0K | 1/10W |
| R106 | NRVA02D-105 | MFR | 1.0M | 1/10W |
| R107 | NRVA02D-333 | MFR | 33K | 1/10W |
| R108 | NRVA02D-102 | MFR | 1.0K | 1/10W |
| R109 | NRVA02D-105 | MFR | 1.0M | 1/10W |
| R110 | NRVA02D-273 | MFR | 27K | 1/10W |
| R111 | NRVA02D-153 | MFR | 15K | 1/10W |
| R112 | NRVA02D-273 | MFR | 27K | 1/10W |
| R113 | NRVA02D-153 | MFR | 15K | 1/10W |
| R114 | NRVA02D-393 | MFR | 39K | 1/10W |
| R115 | NRVA02D-333 | MFR | 33K | 1/10W |
| R116 | NRVA02D-272 | MFR | 2.7K | 1/10W (U) |
| | NRVA02D-182 | MFR | 1.8K | 1/10W (E) |
| R117 | NRVA02D-272 | MFR | 2.7K | 1/10W (U) |
| | NRVA02D-182 | MFR | 1.8K | 1/10W (E) |
| R118 | NRVA02D-152 | MFR | 1.5K | 1/10W (U) |
| | NRVA02D-102 | MFR | 1.0K | 1/10W (E) |
| R119 | NRSA02J-0R0 | MGR | 0 | 1/10W |

| Symbol No. | Part No. | Part Name | Description | |
|---|---|---|---|---|
| R120 | NRVA02D-332 | MFR | 3.3K | 1/10W |
| R121 | NRVA02D-682 | MFR | 6.8K | 1/10W |
| R122 | NRVA02D-222 | MFR | 2.2K | 1/10W |
| R123 | NRVA02D-331 | MFR | 330 | 1/10W |
| R124 | NRVA02D-181 | MFR | 180 | 1/10W |
| R125 | NRVA02D-104 | MFR | 100K | 1/10W |
| R126 | NRVA02D-222 | MFR | 2.2K | 1/10W |
| R127 | NRVA02D-222 | MFR | 2.2K | 1/10W |
| R128 | NRVA02D-682 | MFR | 6.8K | 1/10W |
| R129 | NRVA02D-153 | MFR | 15K | 1/10W |
| R130 | NRVA02D-222 | MFR | 2.2K | 1/10W |
| R131 | NRVA02D-153 | MFR | 15K | 1/10W |
| R132 | NRVA02D-153 | MFR | 15K | 1/10W |
| R134 | NRVA02D-104 | MFR | 100K | 1/10W |
| R135 | NRSA02J-0R0 | MGR | 0 | 1/10W |
| R136 | NRVA02D-562 | MFR | 5.6K | 1/10W |
| R137 | NRVA02D-562 | MFR | 5.6K | 1/10W |
| R138 | NRVA02D-750 | MFR | 75 | 1/10W |
| R139 | NRVA02D-222 | MFR | 2.2K | 1/10W |
| R140 | NRVA02D-222 | MFR | 2.2K | 1/10W |
| R141 | NRVA02D-222 | MFR | 2.2K | 1/10W |
| R142 | NRVA02D-104 | MFR | 100K | 1/10W |
| R143 | NRVA02D-104 | MFR | 100K | 1/10W |
| R144 | NRVA02D-153 | MFR | 15K | 1/10W |
| R145 | NRVA02D-153 | MFR | 15K | 1/10W |
| R146 | NRVA02D-334 | MFR | 330K | 1/10W |
| R147 | NRVA02D-392 | MFR | 3.9K | 1/10W |
| R148 | NRVA02D-392 | MFR | 3.9K | 1/10W |
| R149 | NRVA02D-471 | MFR | 470 | 1/10W |
| R150 | NRVA02D-392 | MFR | 3.9K | 1/10W |
| R151 | NRVA02D-105 | MFR | 1.0M | 1/10W |
| R152 | NRVA02D-104 | MFR | 100K | 1/10W |
| R153 | NRVA02D-104 | MFR | 100K | 1/10W |
| R154 | NRVA02D-223 | MFR | 22K | 1/10W |
| R155 | NRVA02D-223 | MFR | 22K | 1/10W |
| R156 | NRVA02D-223 | MFR | 22K | 1/10W(U) |
| | NRVA02D-472 | MFR | 4.7K | 1/10W(E) |
| R157 | NRVA02D-122 | MFR | 1.2K | 1/10W(U) |
| | NRVA02D-152 | MFR | 1.5K | 1/10W(E) |
| R158 | NRVA02D-682 | MFR | 6.8K | 1/10W(U) |
| | NRVA02D-152 | MFR | 1.5K | 1/10W(E) |
| R159 | NRSA02J-0R0 | MGR | 0 | 1/10W(U) |
| R160 | NRSA02J-0R0 | MGR | 0 | 1/10W(E) |
| R161 | NRVA02D-105 | MFR | 1.0M | 1/10W(E) |
| R162 | NRVA02D-221 | MFR | 220 | 1/10W |
| R163 | NRVA02D-105 | MFR | 1.0M | 1/10W |
| R164 | NRVA02D-104 | MFR | 100K | 1/10W |
| R165 | NRVA02D-104 | MFR | 100K | 1/10W |
| R166 | NRSA02J-0R0 | MGR | 0 | 1/10W(U) |
| R167 | NRSA02J-0R0 | MGR | 0 | 1/10W(E) |
| R168 | NRVA02D-272 | MFR | 2.7K | 1/10W |
| R169 | NRVA02D-104 | MFR | 100K | 1/10W |
| R170 | NRSA02J-0R0 | MGR | 0 | 1/10W |
| R171 | NRSA02J-0R0 | MGR | 0 | 1/10W |
| R172 | NRVA02D-105 | MFR | 1.0M | 1/10W |
| R173 | NRVA02D-221 | MFR | 220 | 1/10W |
| R174 | NRVA02D-392 | MFR | 3.9K | 1/10W |
| R175 | NRVA02D-182 | MFR | 1.8K | 1/10W |
| R176 | NRSA02J-0R0 | MGR | 0 | 1/10W |

| Symbol No. | Part No. | Part Name | Description | |
|---|---|---|---|---|
| R177 | NRSA02J-0R0 | MGR | 0 | 1/10W(U) |
| R178 | NRSA02J-0R0 | MGR | 0 | 1/10W(E) |
| R179 | NRSA02J-0R0 | MGR | 0 | 1/10W(U) |
| R180 | NRSA02J-0R0 | MGR | 0 | 1/10W(U) |
| R181 | NRVA02D-104 | MFR | 100K | 1/10W |
| R182 | NRVA02D-103 | MFR | 10K | 1/10W |
| R184 | NRVA02D-333 | MFR | 33K | 1/10W |
| R185 | NRVA02D-472 | MFR | 4.7K | 1/10W |
| R186 | NRVA02D-183 | MFR | 18K | 1/10W |
| R187 | NRSA02J-0R0 | MGR | 0 | 1/10W |
| R188 | NRSA02J-0R0 | MGR | 0 | 1/10W |
| R190 | NRVA02D-102 | MFR | 1.0K | 1/10W |
| R191 | NRVA02D-102 | MFR | 1.0K | 1/10W |
| R192 | NRVA02D-102 | MFR | 1.0K | 1/10W |
| R193 | NRVA02D-562 | MFR | 5.6K | 1/10W |
| R194 | NRSA02J-0R0 | MGR | 0 | 1/10W(U) |
| R195 | NRVA02D-334 | MFR | 330K | 1/10W |
| R196 | NRVA02D-334 | MFR | 330K | 1/10W |
| R197 | NRVA02D-334 | MFR | 330K | 1/10W |
| R198 | NRVA02D-333 | MFR | 33K | 1/10W |
| R199 | NRVA02D-333 | MFR | 33K | 1/10W |
| R200 | NRVA02D-822 | MFR | 8.2K | 1/10W |
| R202 | NRVA02D-104 | MFR | 100K | 1/10W |
| R203 | NRVA02D-222 | MFR | 2.2K | 1/10W |
| R204 | NRVA02D-222 | MFR | 2.2K | 1/10W |
| R205 | NRVA02D-222 | MFR | 2.2K | 1/10W |
| R206 | NRVA02D-222 | MFR | 2.2K | 1/10W |
| R210 | NRVA02D-472 | MFR | 4.7K | 1/10W |
| R211 | NRVA02D-472 | MFR | 4.7K | 1/10W |
| R213 | NRVA02D-472 | MFR | 4.7K | 1/10W |
| R214 | NRVA02D-472 | MFR | 4.7K | 1/10W |
| R216 | NRVA02D-472 | MFR | 4.7K | 1/10W |
| R217 | NRVA02D-472 | MFR | 4.7K | 1/10W |
| R218 | NRVA02D-104 | MFR | 100K | 1/10W |
| R219 | NRVA02D-104 | MFR | 100K | 1/10W |
| R221 | NRVA02D-392 | MFR | 3.9K | 1/10W |
| R222 | NRSA02J-0R0 | MGR | 0 | 1/10W |
| R223 | NRSA02J-0R0 | MGR | 0 | 1/10W |
| R224 | NRVA02D-100 | MFR | 10 | 1/10W |
| R225 | | JUMPER | SHORT | |
| R226 | NRVA02D-100 | MFR | 10 | 1/10W |
| R227 | NRVA02D-100 | MFR | 10 | 1/10W |
| R228 | NRVA02D-100 | MFR | 10 | 1/10W |
| R229 | NRVA02D-100 | MFR | 10 | 1/10W |
| R230 | NRVA02D-822 | MFR | 8.2K | 1/10W |
| R231 | NRVA02D-332 | MFR | 3.3K | 1/10W(U) |
| R232 | NRSA02J-0R0 | MGR | 0 | 1/10W |
| R233 | NRVA02D-564 | MFR | 560K | 1/10W |
| R234 | NRSA02J-0R0 | MGR | 0 | 1/10W |
| R235 | NRSA02J-0R0 | MGR | 0 | 1/10W |
| R236 | NRVA02D-104 | MFR | 100K | 1/10W |
| R237 | NRVA02D-223 | MFR | 22K | 1/10W |
| R238 | NRVA02D-333 | MFR | 33K | 1/10W(E) |
| R239 | NRVA02D-104 | MFR | 100K | 1/10W |
| R240 | NRVA02D-102 | MFR | 1.0K | 1/10W |
| R241 | NRVA02D-333 | MFR | 33K | 1/10W |
| R242 | NRVA02D-103 | MFR | 10K | 1/10W |
| R243 | NRVA02D-104 | MFR | 100K | 1/10W |
| R244 | NRVA02D-223 | MFR | 22K | 1/10W |

| Symbol No. | Part No. | Part Name | Description | |
|---|---|---|---|---|
| R245 | NRVA02D-391 | MFR | 390 | 1/10W |
| R246 | NRVA02D-223 | MFR | 22K | 1/10W |
| R247 | NRVA02D-472 | MFR | 4.7K | 1/10W |
| R248 | NRVA02D-823 | MFR | 82K | 1/10W |
| R249 | NRVA02D-104 | MFR | 100K | 1/10W |
| R253 | NRVA02D-103 | MFR | 10K | 1/10W |
| R254 | NRVA02D-561 | MFR | 560 | 1/10W |
| R261 | NRVA02D-105 | MFR | 1.0M | 1/10W |
| R262 | NRVA02D-683 | MFR | 68K | 1/10W |
| R264 | NRVA02D-332 | MFR | 3.3K | 1/10W |
| R265 | NRVA02D-105 | MFR | 1.0M | 1/10W(E) |
| R266 | NRVA02D-104 | MFR | 100K | 1/10W(E) |
| R267 | NRVA02D-821 | MFR | 820 | 1/10W(U) |
| | NRSA02J-0R0 | MGR | 0 | 1/10W(E) |
| R268 | NRVA02D-103 | MFR | 10K | 1/10W |
| R269 | NRVA02D-103 | MFR | 10K | 1/10W |
| R270 | NRVA02D-103 | MFR | 10K | 1/10W |
| R271 | NRVA02D-473 | MFR | 47K | 1/10W(U) |
| | NRVA02D-102 | MFR | 1.0K | 1/10W(E) |
| R272 | NRSA02J-0R0 | MGR | 0 | 1/10W |
| R273 | NRVA02D-474 | MFR | 470K | 1/10W(E) |
| R274 | NRSA02J-0R0 | MGR | 0 | 1/10W(U) |
| R275 | NRVA02D-104 | MFR | 100K | 1/10W |
| R276 | NRSA02J-0R0 | MGR | 0 | 1/10W(E) |
| R277 | NRSA02J-0R0 | MGR | 0 | 1/10W |
| R278 | NRVA02D-151 | MFR | 150 | 1/10W |
| VR2 | NVP1415-502 | TRIM.RESISTOR | 5K | B-Y CAR BAL |
| VR3 | NVP1415-502 | TRIM.RESISTOR | 5K | R-Y CAR BAL |
| VR4 | NVP1415-103 | TRIM.RESISTOR | 10K | B-Y GAIN |
| VR5 | NVP1415-103 | TRIM.RESISTOR | 10K | R-Y GAIN |
| VR6 | NVP1415-501 | TRIM.RESISTOR | 5K | QUAD |
| VR7 | NVP1415-503 | TRIM.RESISTOR | 50K | SC ADJ |
| VR8 | NVP1415-503 | TRIM.RESISTOR | 50K | H ADJ |
| VR10 | NVP1415-202 | TRIM.RESISTOR | 2K | SC H |
| VR11 | NVP1415-502 | TRIM.RESISTOR | 5K | ZEBRA SET |
| C4 | NCT03CH-470 | C CAP | 47P | 50V |
| C5 | NCT03CH-100 | C CAP | 10P | 50V |
| C8 | NCT03CH-470 | C CAP | 47P | 50V |
| C9 | NCT03CH-100 | C CAP | 10P | 50V |
| C10 | NCT03CH-390 | C CAP | 39P | 50V |
| C11 | NCT03CH-470 | C CAP | 47P | 50V |
| C12 | NCT03CH-100 | C CAP | 10P | 50V |
| C13 | NCT03CH-390 | C CAP | 39P | 50V |
| C14 | NCF21EZ-104 | C CAP | 0.10 | 25V |
| C15 | NCF21EZ-104 | C CAP | 0.10 | 25V |
| C16 | NCF21EZ-104 | C CAP | 0.10 | 25V |
| C17 | NCF21EZ-104 | C CAP | 0.10 | 25V |
| C18 | NCF21EZ-104 | C CAP | 0.10 | 25V |
| C20 | NCF21EZ-104 | C CAP | 0.10 | 25V |
| C22 | NCT03CH-151 | C CAP | 150P | 50V |
| C23 | NCT03CH-180 | C CAP | 18P | 50V(U) |
| | NCT03CH-390 | C CAP | 39P | 50V(E) |
| C24 | NCT03CH-270 | C CAP | 27P | 50V(U) |
| | NCT03CH-330 | CER.CAPACITOR | 33P | 50V(E) |
| C25 | NCT03CH-390 | C CAP | 39P | 50V(U) |
| | NCT03CH-180 | C CAP | 18P | 50V(E) |
| C26 | NCT03CH-101 | C CAP | 100P | 50V(U) |
| | NCT03CH-121 | C CAP | 120P | 50V(E) |

| Symbol No. | Part No. | Part Name | Description | |
|---|---|---|---|---|
| C29 | NCT03CH-101 | C CAP | 100P | 50V(U) |
| | NCT03CH-680 | C CAP | 68P | 50V(E) |
| C30 | NCT03CH-470 | C CAP | 47P | 50V(U) |
| | NCT03CH-330 | CER.CAPACITOR | 33P | 50V(E) |
| C31 | NCT03CH-390 | C CAP | 39P | 50V(U) |
| | NCT03CH-220 | C CAP | 22P | 50V(E) |
| C33 | NCT03CH-151 | C CAP | 150P | 50V(U) |
| | NCT03CH-121 | C CAP | 120P | 50V(E) |
| C34 | NCF21EZ-104 | C CAP | 0.10 | 25V |
| C35 | NCF21EZ-104 | C CAP | 0.10 | 25V |
| C36 | NEA11AM-336 | E.CAPACITOR | 33 | 10V |
| C37 | NCF21EZ-104 | C CAP | 0.10 | 25V |
| C38 | NEF11VM-104 | T CAP | 0.10 | 35V(U) |
| | NRVA02D-102 | MFR | 1.0K | 1/10W(E) |
| C39 | NCT03CH-222 | C CAP | 2200P | 50V |
| C41 | NCT03CH-102 | C CAP | 1000P | 50V |
| C43 | NCT03CH-102 | C CAP | 1000P | 50V |
| C45 | NCT03CH-102 | C CAP | 1000P | 50V |
| C47 | NCT03CH-102 | C CAP | 1000P | 50V |
| C48 | NCF21EZ-104 | C CAP | 0.10 | 25V |
| C49 | NEF11AM-475 | TA E.CAPACITOR | 4.7 | 10V |
| C52 | NCF21EZ-104 | C CAP | 0.10 | 25V |
| C53 | NCF21EZ-104 | C CAP | 0.10 | 25V |
| C54 | NCT03CH-222 | C CAP | 2200P | 50V |
| C55 | NCT03CH-180 | C CAP | 18P | 50V |
| C56 | NCF21EZ-104 | C CAP | 0.10 | 25V |
| C57 | NCT03CH-390 | C CAP | 39P | 50V(U) |
| | NCT03CH-220 | C CAP | 22P | 50V(E) |
| C58 | NCT03CH-470 | C CAP | 47P | 50V(U) |
| | NCT03CH-330 | CER.CAPACITOR | 33P | 50V(E) |
| C60 | NCT03CH-330 | CER.CAPACITOR | 33P | 50V |
| C61 | NCT03CH-330 | CER.CAPACITOR | 33P | 50V |
| C62 | NCT03CH-330 | CER.CAPACITOR | 33P | 50V(U) |
| | NCT03CH-100 | C CAP | 10P | 50V(E) |
| C64 | NEF11EM-474 | T CAP | 0.47 | 25V |
| C65 | NCF21EZ-104 | C CAP | 0.10 | 25V |
| C66 | NCF21EZ-104 | C CAP | 0.10 | 25V |
| C67 | NEF11AM-475 | TA E.CAPACITOR | 4.7 | 10V |
| C68 | NEF10GM-106 | T CAP | 10 | 4V |
| C69 | NCF21EZ-104 | C CAP | 0.10 | 25V |
| C70 | NCF21EZ-104 | C CAP | 0.10 | 25V |
| C71 | NEF11AM-475 | TA E.CAPACITOR | 4.7 | 10V |
| C72 | NEF11VM-104 | T CAP | 0.10 | 35V(U) |
| | NCT03CH-222 | C CAP | 2200P | 50V(E) |
| C73 | NEA11AM-336 | E.CAPACITOR | 33 | 10V |
| C74 | NCB21HK-332 | C CAP | 3300P | 50V |
| C76 | NEA11AM-336 | E.CAPACITOR | 33 | 10V |
| C77 | NCT03CH-561 | CER.CAPACITOR | 560P | 50V |
| C78 | NCF21EZ-104 | C CAP | 0.10 | 25V |
| C79 | NEA11AM-336 | E.CAPACITOR | 33 | 10V |
| C81 | NCF21EZ-104 | C CAP | 0.10 | 25V |
| C82 | NCF21EZ-104 | C CAP | 0.10 | 25V(U) |
| C83 | NCF21EZ-104 | C CAP | 0.10 | 25V |
| C84 | NCF21EZ-104 | C CAP | 0.10 | 25V |
| C85 | NCF21EZ-104 | C CAP | 0.10 | 25V |
| C86 | NCF21EZ-104 | C CAP | 0.10 | 25V |
| C87 | NCF21EZ-104 | C CAP | 0.10 | 25V |
| C88 | NCF21EZ-104 | C CAP | 0.10 | 25V |
| C89 | NCF21EZ-104 | C CAP | 0.10 | 25V |
| C90 | NCF21EZ-104 | C CAP | 0.10 | 25V |

| Symbol No. | Part No. | Part Name | Description | |
|---|---|---|---|---|
| C91 | NCF21EZ-104 | C CAP | 0.10 | 25V |
| C92 | NCF21EZ-104 | C CAP | 0.10 | 25V |
| C93 | NCF21EZ-104 | C CAP | 0.10 | 25V |
| C94 | NCF21EZ-104 | C CAP | 0.10 | 25V |
| C95 | NCF21EZ-104 | C CAP | 0.10 | 25V |
| C96 | NCF21EZ-104 | C CAP | 0.10 | 25V |
| C97 | NCF21EZ-104 | C CAP | 0.10 | 25V |
| C98 | NCF21EZ-104 | C CAP | 0.10 | 25V |
| C99 | NCF21EZ-104 | C CAP | 0.10 | 25V |
| C100 | NCF21EZ-104 | C CAP | 0.10 | 25V |
| C101 | NCF21EZ-104 | C CAP | 0.10 | 25V |
| C102 | NCF21EZ-104 | C CAP | 0.10 | 25V |
| C103 | NCF21EZ-104 | C CAP | 0.10 | 25V |
| C104 | NCF21EZ-104 | C CAP | 0.10 | 25V |
| C105 | NCF21EZ-104 | C CAP | 0.10 | 25V |
| C106 | NCF21EZ-104 | C CAP | 0.10 | 25V |
| C108 | NCF21EZ-104 | C CAP | 0.10 | 25V |
| C109 | NCF21EZ-104 | C CAP | 0.10 | 25V |
| C110 | NEA11AM-336 | E.CAPACITOR | 33 | 10V |
| C111 | NEA11AM-336 | E.CAPACITOR | 33 | 10V |
| C112 | NEN11HM-105 | NP CAP | 1.0 | 50V |
| C113 | NEA11AM-336 | E.CAPACITOR | 33 | 10V |
| C115 | NEA11AM-336 | E.CAPACITOR | 33 | 10V |
| C116 | NEA11AM-336 | E.CAPACITOR | 33 | 10V |
| C117 | NEA11AM-336 | E.CAPACITOR | 33 | 10V |
| C119 | NEA11AM-336 | E.CAPACITOR | 33 | 10V |
| C120 | NEA11AM-336 | E.CAPACITOR | 33 | 10V |
| C123 | NEA11AM-336 | E.CAPACITOR | 33 | 10V |
| C124 | NEA11AM-336 | E.CAPACITOR | 33 | 10V |
| C125 | NEA11AM-336 | E.CAPACITOR | 33 | 10V |
| C126 | NEA11AM-336 | E.CAPACITOR | 33 | 10V |
| C127 | NEA11AM-336 | E.CAPACITOR | 33 | 10V |
| C128 | NEA11AM-336 | E.CAPACITOR | 33 | 10V |
| C131 | NEA11AM-336 | E.CAPACITOR | 33 | 10V |
| C132 | NEA11AM-336 | E.CAPACITOR | 33 | 10V |
| C133 | NEA11AM-336 | E.CAPACITOR | 33 | 10V |
| C134 | NEA11AM-336 | E.CAPACITOR | 33 | 10V |
| C135 | NEA11AM-336 | E.CAPACITOR | 33 | 10V |
| C136 | NEA11AM-336 | E.CAPACITOR | 33 | 10V |
| C139 | NEA11AM-336 | E.CAPACITOR | 33 | 10V |
| C140 | NEA11AM-336 | E.CAPACITOR | 33 | 10V |
| C141 | NEA11AM-336 | E.CAPACITOR | 33 | 10V |
| C142 | NEA11AM-336 | E.CAPACITOR | 33 | 10V |
| C143 | NEA11AM-336 | E.CAPACITOR | 33 | 10V |
| C144 | NEA11AM-336 | E.CAPACITOR | 33 | 10V |
| C145 | NEA11AM-336 | E.CAPACITOR | 33 | 10V |
| C146 | NEA11AM-336 | E.CAPACITOR | 33 | 10V |
| C147 | NEA11AM-336 | E.CAPACITOR | 33 | 10V |
| C149 | NEA11AM-336 | E.CAPACITOR | 33 | 10V |
| C151 | NEA11AM-336 | E.CAPACITOR | 33 | 10V |
| C152 | NCF21EZ-104 | C CAP | 0.10 | 25V (E) |
| C154 | NEF11CM-105 | TA E.CAPACITOR | 1.0 | 16V (E) |
| C155 | NCT03CH-121 | C CAP | 120P | 50V (E) |
| C156 | NCF21EZ-104 | C CAP | 0.10 | 25V (E) |
| C157 | NCF21EZ-104 | C CAP | 0.10 | 25V (E) |
| C168 | NCF21EZ-104 | C CAP | 0.10 | 25V |
| L1 | SCV1950-470 | PEAKING COIL | 47UH | |
| L2 | SCV1950-470 | PEAKING COIL | 47UH | |

| Symbol No. | Part No. | Part Name | Description | |
|---|---|---|---|---|
| L3 | SCV1950-220 | PEAKING COIL | 22UH | (U) |
| | SCV1950-100 | PEAKING COIL | 10μH | (E) |
| L4 | SCV1950-560 | PEAKING COIL | 56UH | (U) |
| | SCV1950-390 | PEAKING COIL | 39μH | (E) |
| L5 | SCV1950-220 | PEAKING COIL | 22UH | |
| L6 | SCV1950-470 | PEAKING COIL | 47UH | |
| L7 | SCV1950-470 | PEAKING COIL | 47UH | |
| L8 | SCV1950-220 | PEAKING COIL | 22UH | |
| L9 | SCV1950-470 | PEAKING COIL | 47UH | |
| L10 | SCV1950-470 | PEAKING COIL | 47UH | |
| L11 | SCV1950-1R5 | P.COIL | 1.5UH | |
| LC1 | SCV2030-001 | DELAY LINE | 150nsec | |
| LC2 | SCV2031-001 | DELAY LINE | 150nsec | |
| X1 | SCV0347-002 | CRYSTAL | 14.31818MHz | (U) |
| | SCV0348-002 | CRYSTAL | 17.73447MHz | (E) |
| X2 | SCV2024-001 | CRYSTAL | 28.63636MHz | (U) |
| | SCV2026-001 | CRYSTAL | | (E) |
| CN26 | SCV1770-004 | CONNECTOR | 4PIN | |
| CN29 | SCV0495-004 | CONNECTOR | 4PIN | |
| CN30 | SCV0495-004 | CONNECTOR | 4PIN | |
| CN31 | SSV1321-020 | CONNECTOR | 20PIN | |
| CN32 | SSV1321-010 | CONNECTOR | 10PIN | |
| TP1 | SCV1880-001 | TEST POINT | | |
| TP2 | SCV1880-001 | TEST POINT | | |
| TP3 | SCV1880-001 | TEST POINT | | |
| TP4 | SCV1880-001 | TEST POINT | | |
| TP5 | SCV1880-001 | TEST POINT | | |
| TP6 | SCV1880-001 | TEST POINT | | |
| TP7 | SCV1880-001 | TEST POINT | | |

## 7.11 CP1 board assembly list 1 1
## ⟨SCK2308-01-N0A⟩

1 1 □ □ □ □ □ □

| Symbol No. | Part No. | Part Name | Description | |
|---|---|---|---|---|
| IC1 | MB89T715APF | I.C.(M) | FUJITSU | |
| IC2 | PLSC1064-V1-00 | I.C.(M) | JVC | |
| IC3 | LH5116NA-10 | I.C.(M) | SHARP | |
| IC4 | MB89251APF | I.C.(M) | FUJITSU | |
| IC5 | MC74HC373AF | I.C.(M) | MOTOROLA | |
| IC6 | MC74HC139AF | I.C.(M) | MOTOROLA | |
| IC7 | MB89012-109 | I.C.(M) | FUJITSU | |
| IC8 | MC74HC367F | I.C.(M) | MOTOROLA | |
| IC9 | JCS0005 | I.C.(M) | JVC | |
| IC10 | S-2914ARF10-TB | I.C.(M) | SEIKO | |
| IC11 | MC74HC04AF | I.C.(M) | MOTOROLA | |
| IC13 | MB88342PF | I.C.(M) | FUJITSU | |
| IC14 | RC062M | I.C.(M) | JRC | |
| IC15 | MC14053BF | I.C.(M) | MOTOROLA | |
| IC16 | RC062M | I.C.(M) | JRC | |
| IC17 | RC062M | I.C.(M) | JRC | |
| IC18 | RC062M | I.C.(M) | JRC | |
| IC19 | MC14052BF | I.C.(M) | MOTOROLA | |
| IC20 | RC062M | I.C.(M) | JRC | |
| IC21 | MC74HC74AF | I.C.(M) | MOTOROLA | |
| IC22 | S-8054HNCB | I.C.(M) | SEIKO | |
| IC23 | TC4066BF | I.C.(M) | TOSHIBA | |
| IC24 | TC7S00F | I.C.(M) | TOSHIBA | |
| IC28 | MC74HC138AF | I.C.(M) | MOTOROLA | |
| IC29 | MC74HC04AF | I.C.(M) | MOTOROLA | |
| IC31 | TC4S66F | I.C.(M) | TOSHIBA | |
| IC32 | TC7S08F | I.C.(M) | TOSHIBA | |
| Q3 | 2SC3930(BC) | TRANSISTOR | MATSUSHITA | |
| Q4 | 2SC3930(BC) | TRANSISTOR | MATSUSHITA | |
| Q5 | 2SC3930(BC) | TRANSISTOR | MATSUSHITA | |
| Q6 | 2SA1532(BC) | TRANSISTOR | MATSUSHITA | |
| Q7 | 2SC3930(BC) | TRANSISTOR | MATSUSHITA | |
| Q8 | DTC124EU | TRANSISTOR | ROHM | |
| Q9 | 2SB766(QR) | TRANSISTOR | MATSUSHITA | |
| Q10 | 2SC3930(BC) | TRANSISTOR | MATSUSHITA | |
| D3 | MA143A | SI DIODE | MATSUSHITA | |
| D4 | MA335 | SI DIODE | MATSUSHITA | |
| D5 | MA142A | SI DIODE | MATSUSHITA | |
| D6 | MA142A | SI DIODE | MATSUSHITA | |
| D7 | MA143A | SI DIODE | MATSUSHITA | |
| D8 | MA143A | SI DIODE | MATSUSHITA | |
| D9 | MA142A | SI DIODE | MATSUSHITA | |
| D10 | MA142A | SI DIODE | MATSUSHITA | |
| D11 | MA143A | SI DIODE | MATSUSHITA | |
| D12 | MA143A | SI DIODE | MATSUSHITA | |
| D13 | MA142A | SI DIODE | MATSUSHITA | |
| D14 | MA142A | SI DIODE | MATSUSHITA | |
| D15 | MA143A | SI DIODE | MATSUSHITA | |
| D18 | MA143A | SI DIODE | MATSUSHITA | |
| R1 | NRVA02D-102 | C.M.F.RESISTOR | 1.0K | 1/10W |
| R2 | NRVA02D-473 | C.M.F.RESISTOR | 47K | 1/10W |
| R3 | NRVA02D-101 | C.M.F.RESISTOR | 100 | 1/10W |
| R5 | NRVA02D-102 | C.M.F.RESISTOR | 1.0K | 1/10W |
| R6 | NRVA02D-104 | C.M.F.RESISTOR | 100K | 1/10W |
| R7 | NRVA02D-102 | C.M.F.RESISTOR | 1.0K | 1/10W |
| R8 | NRVA02D-104 | C.M.F.RESISTOR | 100K | 1/10W |
| R9 | NRVA02D-103 | C.M.F.RESISTOR | 10K | 1/10W |

| Symbol No. | Part No. | Part Name | Description | |
|---|---|---|---|---|
| R12 | NRVA02D-104 | C.M.F.RESISTOR | 100K | 1/10W |
| R13 | NRVA02D-102 | C.M.F.RESISTOR | 1.0K | 1/10W |
| R14 | NRVA02D-102 | C.M.F.RESISTOR | 1.0K | 1/10W |
| R15 | NRVA02D-101 | C.M.F.RESISTOR | 100 | 1/10W |
| R16 | NRVA02D-101 | C.M.F.RESISTOR | 100 | 1/10W |
| R17 | NRVA02D-472 | C.M.F.RESISTOR | 4.7K | 1/10W |
| R18 | NRVA02D-103 | C.M.F.RESISTOR | 10K | 1/10W |
| R19 | NRVA02D-223 | C.M.F.RESISTOR | 22K | 1/10W |
| R20 | NRVA02D-102 | C.M.F.RESISTOR | 1.0K | 1/10W |
| R21 | NRSA02J-0R0 | M.G.RESISTOR | 0 | 1/10W |
| R23 | NRVA02D-394 | C.M.F.RESISTOR | 390K | 1/10W |
| R24 | NRVA02D-124 | C.M.F.RESISTOR | 120K | 1/10W |
| R25 | NRVA02D-102 | C.M.F.RESISTOR | 1.0K | 1/10W |
| R26 | NRVA02D-104 | C.M.F.RESISTOR | 100K | 1/10W |
| R27 | NRVA02D-104 | C.M.F.RESISTOR | 100K | 1/10W |
| R28 | NRVA02D-220 | C.M.F.RESISTOR | 22 | 1/10W |
| R29 | NRVA02D-101 | C.M.F.RESISTOR | 100 | 1/10W |
| R30 | NRVA02D-101 | C.M.F.RESISTOR | 100 | 1/10W |
| R32 | NRVA02D-101 | C.M.F.RESISTOR | 100 | 1/10W |
| R33 | NRVA02D-101 | C.M.F.RESISTOR | 100 | 1/10W |
| R34 | NRVA02D-101 | C.M.F.RESISTOR | 100 | 1/10W |
| R35 | NRVA02D-102 | C.M.F.RESISTOR | 1.0K | 1/10W |
| R36 | NRVA02D-223 | C.M.F.RESISTOR | 22K | 1/10W |
| R37 | NRVA02D-103 | C.M.F.RESISTOR | 10K | 1/10W |
| R38 | NRVA02D-222 | C.M.F.RESISTOR | 2.2K | 1/10W |
| R39 | NRVA02D-101 | C.M.F.RESISTOR | 100 | 1/10W |
| R40 | NRVA02D-102 | C.M.F.RESISTOR | 1.0K | 1/10W |
| R41 | NRVA02D-223 | C.M.F.RESISTOR | 22K | 1/10W |
| R42 | NRVA02D-104 | C.M.F.RESISTOR | 100K | 1/10W |
| R43 | NRVA02D-104 | C.M.F.RESISTOR | 100K | 1/10W |
| R44 | NRVA02D-223 | C.M.F.RESISTOR | 22K | 1/10W |
| R45 | NRVA02D-332 | C.M.F.RESISTOR | 3.3K | 1/10W |
| R46 | NRVA02D-104 | C.M.F.RESISTOR | 100K | 1/10W |
| R47 | NRVA02D-103 | C.M.F.RESISTOR | 10K | 1/10W |
| R49 | NRVA02D-103 | C.M.F.RESISTOR | 10K | 1/10W |
| R50 | NRVA02D-123 | C.M.F.RESISTOR | 12K | 1/10W |
| R51 | NRVA02D-104 | C.M.F.RESISTOR | 100K | 1/10W |
| R52 | NRVA02D-104 | C.M.F.RESISTOR | 100K | 1/10W |
| R53 | NRVA02D-123 | C.M.F.RESISTOR | 12K | 1/10W |
| R54 | NRVA02D-104 | C.M.F.RESISTOR | 100K | 1/10W |
| R55 | NRVA02D-223 | C.M.F.RESISTOR | 22K | 1/10W |
| R56 | NRVA02D-224 | C.M.F.RESISTOR | 220K | 1/10W |
| R57 | NRVA02D-123 | C.M.F.RESISTOR | 12K | 1/10W |
| R58 | NRVA02D-334 | C.M.F.RESISTOR | 330K | 1/10W |
| R59 | NRVA02D-104 | C.M.F.RESISTOR | 100K | 1/10W |
| R61 | NRVA02D-102 | C.M.F.RESISTOR | 1.0K | 1/10W |
| R62 | NRVA02D-683 | C.M.F.RESISTOR | 68K | 1/10W |
| R63 | NRVA02D-274 | C.M.F.RESISTOR | 270K | 1/10W |
| R64 | NRVA02D-104 | C.M.F.RESISTOR | 100K | 1/10W |
| R65 | NRVA02D-102 | C.M.F.RESISTOR | 1.0K | 1/10W |
| R66 | NRVA02D-104 | C.M.F.RESISTOR | 100K | 1/10W |
| R67 | NRVA02D-223 | C.M.F.RESISTOR | 22K | 1/10W |
| R68 | NRVA02D-103 | C.M.F.RESISTOR | 10K | 1/10W |
| R69 | NRVA02D-153 | C.M.F.RESISTOR | 15K | 1/10W |
| R70 | NRVA02D-223 | C.M.F.RESISTOR | 22K | 1/10W |
| R71 | NRVA02D-473 | C.M.F.RESISTOR | 47K | 1/10W |
| R72 | NRVA02D-103 | C.M.F.RESISTOR | 10K | 1/10W |
| R73 | NRVA02D-472 | C.M.F.RESISTOR | 4.7K | 1/10W |
| R74 | NRVA02D-682 | C.M.F.RESISTOR | 6.8K | 1/10W |

| Symbol No. | Part No. | Part Name | Description | |
|---|---|---|---|---|
| R75 | NRVA02D-103 | C.M.F.RESISTOR | 10K | 1/10W |
| R76 | NRVA02D-183 | C.M.F.RESISTOR | 18K | 1/10W |
| R77 | NRVA02D-103 | C.M.F.RESISTOR | 10K | 1/10W |
| R78 | NRVA02D-183 | C.M.F.RESISTOR | 18K | 1/10W |
| R79 | NRVA02D-333 | C.M.F.RESISTOR | 33K | 1/10W |
| R80 | NRVA02D-683 | C.M.F.RESISTOR | 68K | 1/10W |
| R81 | NRVA02D-103 | C.M.F.RESISTOR | 10K | 1/10W |
| R82 | NRVA02D-474 | C.M.F.RESISTOR | 470K | 1/10W |
| R83 | NRVA02D-474 | C.M.F.RESISTOR | 470K | 1/10W |
| R84 | NRVA02D-101 | C.M.F.RESISTOR | 100 | 1/10W |
| R85 | NRVA02D-102 | C.M.F.RESISTOR | 1.0K | 1/10W |
| R87 | NRVA02D-223 | C.M.F.RESISTOR | 22K | 1/10W |
| R88 | NRVA02D-273 | C.M.F.RESISTOR | 27K | 1/10W |
| R89 | NRVA02D-392 | C.M.F.RESISTOR | 3.9K | 1/10W |
| R90 | NRVA02D-104 | C.M.F.RESISTOR | 100K | 1/10W |
| R91 | NRVA02D-101 | C.M.F.RESISTOR | 100 | 1/10W |
| R92 | NRVA02D-103 | C.M.F.RESISTOR | 10K | 1/10W |
| R93 | NRVA02D-182 | C.M.F.RESISTOR | 1.8K | 1/10W |
| R94 | NRVA02D-101 | C.M.F.RESISTOR | 100 | 1/10W |
| R95 | NRVA02D-101 | C.M.F.RESISTOR | 100 | 1/10W |
| R96 | NRVA02D-101 | C.M.F.RESISTOR | 100 | 1/10W |
| R97 | NRVA02D-153 | C.M.F.RESISTOR | 15K | 1/10W |
| R98 | NRVA02D-472 | C.M.F.RESISTOR | 4.7K | 1/10W |
| R99 | NRVA02D-223 | C.M.F.RESISTOR | 22K | 1/10W |
| R100 | NRVA02D-222 | C.M.F.RESISTOR | 2.2K | 1/10W |
| R101 | NRVA02D-151 | C.M.F.RESISTOR | 150 | 1/10W |
| R102 | NRVA02D-101 | C.M.F.RESISTOR | 100 | 1/10W |
| R103 | NRSA02J-0R0 | M.G.RESISTOR | 0 | 1/10W |
| R104 | NRVA02D-101 | C.M.F.RESISTOR | 100 | 1/10W |
| R105 | NRVA02D-101 | C.M.F.RESISTOR | 100 | 1/10W |
| R106 | NRVA02D-220 | C.M.F.RESISTOR | 22 | 1/10W |
| R107 | NRVA02D-101 | C.M.F.RESISTOR | 100 | 1/10W |
| R108 | NRVA02D-101 | C.M.F.RESISTOR | 100 | 1/10W |
| R109 | NRVA02D-101 | C.M.F.RESISTOR | 100 | 1/10W |
| R110 | NRVA02D-101 | C.M.F.RESISTOR | 100 | 1/10W |
| R111 | NRVA02D-101 | C.M.F.RESISTOR | 100 | 1/10W |
| R112 | NRVA02D-104 | C.M.F.RESISTOR | 100K | 1/10W |
| R113 | NRVA02D-103 | C.M.F.RESISTOR | 10K | 1/10W |
| R114 | NRVA02D-473 | C.M.F.RESISTOR | 47K | 1/10W |
| R115 | NRVA02D-223 | C.M.F.RESISTOR | 22K | 1/10W |
| R116 | NRVA02D-273 | C.M.F.RESISTOR | 27K | 1/10W |
| R117 | NRVA02D-183 | C.M.F.RESISTOR | 18K | 1/10W |
| R118 | NRVA02D-101 | C.M.F.RESISTOR | 100 | 1/10W |
| R119 | NRVA02D-471 | C.M.F.RESISTOR | 470 | 1/10W |
| R120 | NRVA02D-101 | C.M.F.RESISTOR | 100 | 1/10W |
| R121 | NRVA02D-101 | C.M.F.RESISTOR | 100 | 1/10W |
| R122 | NRVA02D-101 | C.M.F.RESISTOR | 100 | 1/10W |
| R123 | NRVA02D-223 | C.M.F.RESISTOR | 22K | 1/10W |
| R124 | NRVA02D-223 | C.M.F.RESISTOR | 22K | 1/10W |
| R125 | NRVA02D-472 | C.M.F.RESISTOR | 4.7K | 1/10W |
| R126 | NRVA02D-103 | C.M.F.RESISTOR | 10K | 1/10W |
| VR1 | NVP1415-502 | TRIM.RESISTOR | 5K | B-G |
| VR2 | NVP1415-502 | TRIM.RESISTOR | 5K | R-G |
| VR3 | NVP1415-503 | V RESISTOR | 50K | NAM LEVEL |
| VR5 | NVP1415-104 | V RESISTOR | 100K | A/D OFFSET |
| C1 | NCB21EK-473 | C CAP | 0.047 | 25V |
| C2 | NCB21HK-562 | C CAP | 5600P | 50V |
| C3 | NEF11CM-105 | TA E CAP | 1.0 | 16V |

| Symbol No. | Part No. | Part Name | Description | |
|---|---|---|---|---|
| C5 | NCT03CH-820 | C CAP | 82P | 50V |
| C7 | NCT03CH-150 | C CAP | 15P | 50V |
| C8 | NCB21EK-473 | C CAP | 0.047 | 25V |
| C9 | NCT03CH-821 | C CAP | 820P | 50V |
| C10 | NCB21EK-473 | C CAP | 0.047 | 25V |
| C11 | NCT03CH-181 | C CAP | 180P | 50V |
| C12 | NCT03CH-151 | C CAP | 150P | 50V |
| C14 | NCB21EK-473 | C CAP | 0.047 | 25V |
| C15 | NCB21EK-473 | C CAP | 0.047 | 25V |
| C16 | NCB21EK-473 | C CAP | 0.047 | 25V |
| C17 | NCB21EK-473 | C CAP | 0.047 | 25V |
| C18 | NEF11AM-156 | TA E.CAP | 15 | 10V |
| C19 | NCB21EK-473 | C CAP | 0.047 | 25V |
| C20 | NCB21EK-473 | C CAP | 0.047 | 25V |
| C21 | NCB21EK-473 | C CAP | 0.047 | 25V |
| C22 | NCB21EK-473 | C CAP | 0.047 | 25V |
| C23 | NCB21EK-473 | C CAP | 0.047 | 25V |
| C24 | NCB21EK-473 | C CAP | 0.047 | 25V |
| C25 | NCB21EK-473 | C CAP | 0.047 | 25V |
| C26 | NCB21EK-473 | C CAP | 0.047 | 25V |
| C27 | NCB21EK-473 | C CAP | 0.047 | 25V |
| C28 | NCB21EK-473 | C CAP | 0.047 | 25V |
| C29 | NCB21EK-473 | C CAP | 0.047 | 25V |
| C31 | NCB21EK-393 | C CAP | 0.039 | 25V |
| C33 | NEF11CM-105 | TA E.CAP | 1.0 | 16V |
| C34 | NEN11HM-105 | NP E.CAP | 1.0 | 50V |
| C35 | NCT03CH-150 | C CAP | 15P | 50V |
| C36 | NCB21EK-473 | C CAP | 0.047 | 25V |
| C37 | NEF11AM-475 | TA E.CAP | 4.7 | 10V |
| C38 | NEF11CM-105 | TA E.CAP | 1.0 | 16V |
| C39 | NCB21EK-473 | C CAP | 0.047 | 25V |
| C40 | NCB21EK-473 | C CAP | 0.047 | 25V |
| C41 | NEA11EM-106 | E.CAP | 10 | 25V |
| C42 | NCB21EK-473 | C CAP | 0.047 | 25V |
| C43 | NEA11CM-476 | E.CAP | 47 | 16V |
| C44 | NEA10JM-107 | E.CAP | 100 | 6.3V |
| C45 | NEA10JM-107 | E.CAP | 100 | 6.3V |
| C46 | NEA10JM-107 | E.CAP | 100 | 6.3V |
| C47 | NEN11HM-105 | NP E.CAP | 1.0 | 50V |
| C52 | NCB21EK-473 | C CAP | 0.047 | 25V |
| C53 | QEZ0171-224 | E CAP | 0.22 | |
| C54 | NCB21EK-473 | C CAP | 0.047 | 25V |
| C56 | NCT03CH-221 | C CAP | 220P | 50V |
| C57 | NFV11EJ-104 | F.M. CAP | 0.1 | 25V |
| C58 | NEF11AM-156 | E CAP | 15 | 10V |
| C59 | NFV11EJ-104 | F.M. CAP | 0.1 | 25V |
| C60 | NEF11EM-475 | T CAP | 4.7 | 25V |
| L1 | SSV1330-150 | COIL | 15μH | |
| L2 | SSV1330-150 | COIL | 15μH | |
| L3 | SCV1950-220 | PEAKING COIL | 22μH | |
| L4 | SCV1950-4R7 | PEAKING COIL | 4.7μH | |
| X1 | SCV2029-001 | CRYSTAL | 7.373MHz | |
| S1 | SCV1919-004 | DIP SWITCH | CHECK | |

| Symbol No. | Part No. | Part Name | Description |
|---|---|---|---|
| CN18 | SCV1770-009 | CONNECTOR | 9PIN |
| CN27 | SSV1321-020 | CONNECTOR | 20PIN |
| CN28 | SSV1321-020 | CONNECTOR | 20PIN |
| CN43 | SCV1770-004 | CONNECTOR | 4PIN |
| CN44 | SCV1814-008 | CONNECTOR | 8PIN |
| CN45 | SCV1814-008 | CONNECTOR | 8PIN |
| CN46 | SCV1814-008 | CONNECTOR | 8PIN |
| CN47 | SCV1814-008 | CONNECTOR | 8PIN |

## 7.12 CP2 board assembly list 1 2 ⟨SCK2308-02-00A⟩

1 2 □ □ □ □ □ □

| Symbol No. | Part No. | Part Name | Description | |
|---|---|---|---|---|
| IC1 | MC74HC165F | I.C.(M) | MOTOROLA | |
| IC2 | MC74HC367F | I.C.(M) | MOTOROLA | |
| R1 | NRVA02D-223 | C.M.F.RESISTOR | 22K | 1/10W |
| R2 | NRVA02D-223 | C.M.F.RESISTOR | 22K | 1/10W |
| R3 | NRVA02D-223 | C.M.F.RESISTOR | 22K | 1/10W |
| R4 | NRVA02D-223 | C.M.F.RESISTOR | 22K | 1/10W |
| R5 | NRVA02D-223 | C.M.F.RESISTOR | 22K | 1/10W |
| R6 | NRVA02D-223 | C.M.F.RESISTOR | 22K | 1/10W |
| R7 | NRVA02D-223 | C.M.F.RESISTOR | 22K | 1/10W |
| R8 | NRVA02D-223 | C.M.F.RESISTOR | 22K | 1/10W |
| R9 | NRVA02D-223 | C.M.F.RESISTOR | 22K | 1/10W |
| C1 | NCB21EK-473 | C CAP | 0.047 | 25V |
| C2 | NCB21EK-473 | C CAP | 0.047 | 25V |
| S1 | SCV2162-001 | TACT SWITCH | SET | |
| S2 | SCV2162-001 | TACT SWITCH | UP | |
| S3 | SCV2162-001 | TACT SWITCH | DOWN | |
| CN44 | SCV1821-008 | CONNECTOR | 8PIN | |
| CN45 | SCV1821-008 | CONNECTOR | 8PIN | |
| CN46 | SCV1821-008 | CONNECTOR | 8PIN | |
| CN47 | SCV1821-008 | CONNECTOR | 8PIN | |

## 7.13 PS board assembly list 1 3 ⟨SCK2306-03-00A⟩

1 3 □ □ □ □ □ □

| Symbol No. | Part No. | Part Name | Description | |
|---|---|---|---|---|
| IC1 | TL1451CNS | I.C.(M) | TEXAS | |
| IC2 | LM2904M | I.C.(M) | TEXAS | |
| IC3 | LM2904M | I.C.(M) | TEXAS | |
| IC4 | MC74HC02AF | I.C.(M) | MOTOROLA | |
| IC5 | MC74HC74AF | I.C.(M) | MOTOROLA | |
| Q1 | 2SA1244(Y) | TRANSISTOR | TOSHIBA | |
| Q2 | 2SA1244(Y) | TRANSISTOR | TOSHIBA | |
| Q3 | 2SA1532(BC) | TRANSISTOR | MATSUSHITA | |
| ⚠Q4 | 2SA1244(Y) | TRANSISTOR | TOSHIBA | |
| Q5 | 2SD1820(QR) | TRANSISTOR | MATSUSHITA | |
| Q6 | 2SA1244(Y) | TRANSISTOR | TOSHIBA | |
| Q7 | 2SA1532(BC) | TRANSISTOR | MATSUSHITA | |
| ⚠Q8 | 2SA1244(Y) | TRANSISTOR | TOSHIBA | |
| Q9 | 2SD1820(QR) | TRANSISTOR | MATSUSHITA | |
| Q10 | 2SC3930(BC) | TRANSISTOR | MATSUSHITA | |
| Q11 | 2SA1532(BC) | TRANSISTOR | MATSUSHITA | |
| Q12 | 2SC3930(BC) | TRANSISTOR | MATSUSHITA | |
| Q13 | 2SA1532(BC) | TRANSISTOR | MATSUSHITA | |
| Q14 | 2SC3303(Y) | TRANSISTOR | TOSHIBA | |
| Q15 | 2SC3303(Y) | TRANSISTOR | TOSHIBA | |
| ⚠Q16 | 2SC3303(Y) | TRANSISTOR | TOSHIBA | |
| Q17 | DTC124EU | TRANSISTOR | ROHM | |
| Q18 | 2SC3930(BC) | TRANSISTOR | MATSUSHITA | |
| Q19 | DTC124EU | TRANSISTOR | ROHM | |
| Q20 | 2SC3930(BC) | TRANSISTOR | MATSUSHITA | |
| D1 | SB540 | SI DIODE | GENERAL INST | |
| D2 | SB140 | SI DIODE | GENERAL INST | |
| D3 | MA142WA | SI DIODE | MATSUSHITA | |
| ⚠D4 | ERA82-004 | SI DIODE | FUJIELECTRIC | |
| ⚠D5 | ERA82-004 | SI DIODE | FUJIELECTRIC | |
| ⚠D6 | ERA82-004 | SI DIODE | FUJIELECTRIC | |
| ⚠D7 | ERA82-004 | SI DIODE | FUJIELECTRIC | |
| ⚠D8 | ERA82-004 | SI DIODE | FUJIELECTRIC | |
| ⚠D9 | ERA82-004 | SI DIODE | FUJIELECTRIC | |
| D10 | MA143A | SI DIODE | MATSUSHITA | |
| R1 | NRSA02J-103 | M.G.RESISTOR | 10K | 1/10W |
| R2 | NRSA02J-103 | M.G.RESISTOR | 10K | 1/10W |
| R3 | NRSA02J-103 | M.G.RESISTOR | 10K | 1/10W |
| R4 | NRSA02J-103 | M.G.RESISTOR | 10K | 1/10W |
| R5 | NRSA02J-103 | M.G.RESISTOR | 10K | 1/10W |
| R6 | NRSA02J-224 | M.G.RESISTOR | 220K | 1/10W |
| R7 | NRSA02J-104 | M.G.RESISTOR | 100K | 1/10W |
| R8 | NRSA02J-103 | M.G.RESISTOR | 10K | 1/10W |
| R9 | NRSA02J-104 | M.G.RESISTOR | 100K | 1/10W |
| R10 | NRSA02J-271 | M.G.RESISTOR | 270 | 1/10W |
| R11 | NRSA02J-271 | M.G.RESISTOR | 270 | 1/10W |
| R12 | NRSA02J-102 | M.G.RESISTOR | 1.0K | 1/10W |
| R13 | NRSA02J-102 | M.G.RESISTOR | 1.0K | 1/10W |
| R14 | NRSA02J-102 | M.G.RESISTOR | 1.0K | 1/10W |
| R15 | NRSA02J-102 | M.G.RESISTOR | 1.0K | 1/10W |
| R16 | NRSA02J-103 | M.G.RESISTOR | 10K | 1/10W |
| R17 | NRSA02J-272 | M.G.RESISTOR | 2.7K | 1/10W |
| R18 | NRSA02J-224 | M.G.RESISTOR | 220K | 1/10W |
| R19 | NRSA02J-101 | M.G.RESISTOR | 100 | 1/10W |
| R20 | NRSA02J-121 | M.G.RESISTOR | 120 | 1/10W |
| R21 | NRSA02J-124 | M.G.RESISTOR | 120K | 1/10W |

| Symbol No. | Part No. | Part Name | Description | |
|---|---|---|---|---|
| R22 | NRSA02J-100 | M.G.RESISTOR | 10 | 1/10W |
| R23 | NRSA02J-153 | M.G.RESISTOR | 15K | 1/10W |
| R24 | NRSA02J-153 | M.G.RESISTOR | 15K | 1/10W |
| R25 | NRSA02J-103 | M.G.RESISTOR | 10K | 1/10W |
| R26 | NRSA02J-271 | M.G.RESISTOR | 270 | 1/10W |
| R27 | NRSA02J-102 | M.G.RESISTOR | 1.0K | 1/10W |
| R28 | NRSA02J-102 | M.G.RESISTOR | 1.0K | 1/10W |
| R29 | NRSA02J-153 | M.G.RESISTOR | 15K | 1/10W |
| R30 | NRSA02J-222 | M.G.RESISTOR | 2.2K | 1/10W |
| R31 | NRSA02J-101 | M.G.RESISTOR | 100 | 1/10W |
| R32 | NRSA02J-222 | M.G.RESISTOR | 2.2K | 1/10W |
| R33 | NRSA02J-104 | M.G.RESISTOR | 100K | 1/10W |
| R34 | NRSA02J-153 | M.G.RESISTOR | 15K | 1/10W |
| R35 | NRSA02J-562 | M.G.RESISTOR | 5.6K | 1/10W |
| R36 | NRSA02J-101 | M.G.RESISTOR | 100 | 1/10W |
| R37 | NRSA02J-101 | M.G.RESISTOR | 100 | 1/10W |
| R38 | NRSA02J-221 | M.G.RESISTOR | 220 | 1/10W |
| R39 | NRSA02J-221 | M.G.RESISTOR | 220 | 1/10W |
| R40 | QRD161J-180 | C.RESISTOR | 18 | 1/6W |
| ⚠R41 | QRD161J-220 | C.RESISTOR | 22 | 1/6W |
| ⚠R42 | QRD161J-220 | C.RESISTOR | 22 | 1/6W |
| R43 | NRSA02J-103 | M.G.RESISTOR | 10K | 1/10W |
| R44 | NRSA02J-103 | M.G.RESISTOR | 10K | 1/10W |
| R45 | NRSA02J-223 | M.G.RESISTOR | 22K | 1/10W |
| R46 | NRSA02J-822 | M.G.RESISTOR | 8.2K | 1/10W |
| R47 | NRSA02J-223 | M.G.RESISTOR | 22K | 1/10W |
| VR1 | QVPB612-102 | TRIM RESISTOR | 1K | +5V ADJ |
| C2 | NEF11CM-106 | TA E CAP | 10 | 16V |
| C3 | QEPA1HM-105 | NP CAP | 1.0 | 50V |
| C4 | NCT03CH-471 | C CAP | 470P | 50V |
| C5 | QFN41HJ-222 | MY CAP | 2200P | 50V |
| C6 | NCT03CH-471 | C CAP | 470P | 50V |
| C7 | QEPA1HM-105 | NP CAP | 1.0 | 50V |
| C8 | QETA0JM-108 | E CAP | 1000 | 6.3V |
| C9 | QETA0JM-108 | E CAP | 1000 | 6.3V |
| C10 | QEX41AK-226 | E CAP | 22 | 10V |
| C11 | QEX41AK-226 | E CAP | 22 | 10V |
| C12 | QEX41AK-226 | E CAP | 22 | 10V |
| C13 | QEJ41VM-474 | T CAP | 0.47 | 35V |
| C14 | NEF11EM-475 | T CAP | 4.7 | 25V |
| C15 | QETA1AM-477 | E CAP | 470 | 10V |
| C16 | QETA1CM-477 | E CAP | 470 | 16V |
| C17 | QETA1CM-477 | E CAP | 470 | 16V |
| C18 | QEX41CM-156 | E CAP | 15 | 16V |
| C19 | QEX41CM-156 | E CAP | 15 | 16V |
| C20 | QEX41CM-156 | E CAP | 15 | 16V |
| C23 | QETA1AM-477 | E CAP | 470 | 10V |
| C24 | NCB21EK-473 | C CAP | 0.047 | 25V |
| C25 | QER41EM-106 | E CAP | 10 | 25V |
| C26 | QER41EM-106 | E CAP | 10 | 25V |
| C27 | QETA1CM-477 | E CAP | 470 | 16V |
| C28 | QFN41HJ-102 | MYLAR CAP | 1000P | 50V |
| ⚠C29 | QETA1EM-477 | E CAP | 470 | 25V |
| ⚠C30 | QETA1EM-477 | E CAP | 470 | 25V |
| ⚠C31 | QETA1AM-477 | E CAP | 470 | 10V |
| ⚠C32 | QETA1AM-477 | E CAP | 470 | 10V |
| ⚠C33 | QETA1CM-477 | E CAP | 470 | 16V |

| Symbol No. | Part No. | Part Name | Description | |
|---|---|---|---|---|
| ⚠C34 | QETA1CM-477 | E CAP | 470 | 16V |
| C35 | QETA1AM-477 | E CAP | 470 | 10V |
| C36 | QEM41EM-108 | E CAP | 1000 | 25V |
| C37 | QETA1EM-108 | E CAP | 1000 | 25V |
| C38 | NEF11CM-106 | TA E CAP | 10 | 16V |
| C39 | NEF11CM-106 | TA E CAP | 10 | 16V |
| L1 | SCV0390-025 | CHOKE COIL | 25μH | |
| L2 | SCV1957-001 | PEAKING COIL | 120μH | |
| L3 | SCV0390-025 | CHOKE COIL | 25μH | |
| L4 | SCV0391-250 | CHOKE COIL | 25μH | |
| L5 | SCV0390-025 | CHOKE COIL | 25μH | |
| L6 | SCV0983-500 | PEAKING COIL | 50μH | |
| ⚠L7 | SCV0983-500 | PEAKING COIL | 50μH | |
| ⚠L8 | SCV0983-500 | PEAKING COIL | 50μH | |
| ⚠L9 | SCV0983-500 | PEAKING COIL | 50μH | |
| CN2 | SCV0501-001 | CONNECTOR | 30PIN | |
| TP1 | SCV1397 | TEST POINT | | |
| TP2 | SCV1397 | TEST POINT | | |
| TP3 | SCV1397 | TEST POINT | | |
| ⚠CP1 | ICP-F25 | I.C.PROTECTOR | | |
| ⚠CP2 | ICP-F10 | I.C.PROTECTOR | | |
| ⚠CP3 | ICP-F10 | I.C.PROTECTOR | | |
| ⚠T1 | SCV2032-001 | TRANSFORMER | | |

## 7.14 IF board assembly list 14
## 〈SCK2306-02-00A〉

14□□□□□□□

| Symbol No. | Part No. | Part Name | Description | |
|---|---|---|---|---|
| D1 | MA143A | SI DIODE | MATSUSHITA | |
| D2 | MA143A | SI DIODE | MATSUSHITA | |
| D3 | MA143A | SI DIODE | MATSUSHITA | |
| D4 | MA143A | SI DIODE | MATSUSHITA | |
| D5 | MA143A | SI DIODE | MATSUSHITA | |
| D6 | MA143A | SI DIODE | MATSUSHITA | |
| D7 | MA143A | SI DIODE | MATSUSHITA | |
| D8 | MA143A | SI DIODE | MATSUSHITA | |
| D9 | MA143A | SI DIODE | MATSUSHITA | |
| D10 | MA143A | SI DIODE | MATSUSHITA | |
| D11 | MA143A | SI DIODE | MATSUSHITA | |
| D12 | MA143A | SI DIODE | MATSUSHITA | |
| D13 | MA143A | SI DIODE | MATSUSHITA | |
| D14 | MA143A | SI DIODE | MATSUSHITA | |
| D15 | MA143A | SI DIODE | MATSUSHITA | |
| D16 | MA143A | SI DIODE | MATSUSHITA | |
| D17 | MA143A | SI DIODE | MATSUSHITA | |
| R1 | NRSA02J-153 | M.G.RESISTOR | 15K | 1/10W |
| R2 | NRSA02J-473 | M.G.RESISTOR | 47K | 1/10W |
| R3 | NRSA02J-153 | M.G.RESISTOR | 15K | 1/10W |
| R4 | NRSA02J-473 | M.G.RESISTOR | 47K | 1/10W |
| C1 | QER41AM-476 | E. CAP | 47 | 10V |
| C2 | QER41AM-476 | E. CAP | 47 | 10V |
| ⚠LC1 | EXC-EMT271BC | EMI FILTER | | |
| CN11 | SSV1591-L03 | CONNECTOR | 3PIN | |
| CN34 | SCV1766-020 | CONNECTOR | 20PIN | |
| CN35 | SCV1766-020 | CONNECTOR | 20PIN | |
| ⚠CN39 | SCV1259-50P | CONNECTOR | 50PIN | |
| CN42 | SCV1978-L02 | CONNECTOR | 2PIN | |

## 7.15 MT1 board assembly list 15
## 〈SCK2306-01-00A〉

15□□□□□□□

| Symbol No. | Part No. | Part Name | Description | |
|---|---|---|---|---|
| IC1 | MC14053BF | I.C.(M) | MOTOROLA | |
| IC3 | RC2068MD | I.C.(M) | RAYTHEON | |
| IC5 | MC14053BF | I.C.(M) | MOTOROLA | |
| IC6 | MC14094BF | I.C.(M) | MOTOROLA | |
| IC7 | MC14094BF | I.C.(M) | MOTOROLA | |
| IC8 | MC74HC4053F | I.C.(M) | MOTOROLA | |
| Q1 | 2SC4562(QR) | TRANSISTOR | MATSUSHITA | |
| Q2 | 2SC4562(QR) | TRANSISTOR | MATSUSHITA | |
| Q3 | 2SC4562(QR) | TRANSISTOR | MATSUSHITA | |
| Q4 | 2SC4562(QR) | TRANSISTOR | MATSUSHITA | |
| Q5 | DTA124EU | D.TRANSISTER | ROHM | |
| Q6 | DTA124EU | D.TRANSISTER | ROHM | |
| D1 | MA143A | SI DIODE | MATSUSHITA | |
| D2 | MA143A | SI DIODE | MATSUSHITA | |
| D3 | MA143A | SI DIODE | MATSUSHITA | |
| D4 | MA143A | SI DIODE | MATSUSHITA | |
| D5 | MA143A | SI DIODE | MATSUSHITA | |
| D6 | MA142A | DIODE | MATSUSHITA | |
| R1 | NRSA02J-101 | MGR | 100 | 1/10W |
| R2 | NRSA02J-332 | MGR | 3.3K | 1/10W |
| R3 | NRSA02J-103 | MGR | 10K | 1/10W |
| R4 | NRSA02J-102 | MGR | 1.0K | 1/10W |
| R5 | NRSA02J-392 | MGR | 3.9K | 1/10W |
| R6 | NRSA02J-392 | MGR | 3.9K | 1/10W |
| R7 | NRSA02J-392 | MGR | 3.9K | 1/10W |
| R8 | NRSA02J-272 | MGR | 2.7K | 1/10W |
| R9 | NRSA02J-101 | MGR | 100 | 1/10W |
| R10 | NRSA02J-101 | MGR | 100 | 1/10W |
| R11 | NRSA02J-101 | MGR | 100 | 1/10W |
| R12 | NRSA02J-471 | MGR | 470 | 1/10W |
| R13 | NRSA02J-223 | MGR | 22K | 1/10W |
| R14 | NRSA02J-561 | MGR | 560 | 1/10W |
| R15 | NRSA02J-181 | MGR | 180 | 1/10W |
| R16 | NRSA02J-220 | MGR | 22 | 1/10W |
| R17 | NRSA02J-220 | MGR | 22 | 1/10W |
| R18 | NRSA02J-101 | MGR | 100 | 1/10W |
| R19 | NRSA02J-471 | MGR | 470 | 1/10W |
| R20 | NRSA02J-223 | MGR | 22K | 1/10W |
| R21 | NRSA02J-222 | MGR | 2.2K | 1/10W |
| R22 | NRSA02J-181 | MGR | 180 | 1/10W |
| R23 | NRSA02J-101 | MGR | 100 | 1/10W |
| R24 | NRSA02J-474 | MGR | 470K | 1/10W |
| R25 | NRSA02J-104 | MGR | 100K | 1/10W |
| R26 | NRSA02J-104 | MGR | 100K | 1/10W |
| R27 | NRSA02J-104 | MGR | 100K | 1/10W |
| R28 | NRSA02J-104 | MGR | 100K | 1/10W |
| R29 | NRSA02J-104 | MGR | 100K | 1/10W |
| R30 | NRSA02J-222 | MGR | 2.2K | 1/10W |
| R31 | NRSA02J-153 | MGR | 15K | 1/10W |
| R32 | NRSA02J-153 | MGR | 15K | 1/10W |
| R33 | NRSA02J-104 | MGR | 100K | 1/10W |
| C1 | QEPA1CM-106 | NP E.CAPACITOR | 10 | 16V |
| C2 | QEJ41AM-476 | T CAP | 47 | 10V |
| C3 | QEJ41AM-476 | T CAP | 47 | 10V |

## 7.16 MT2 board assembly list 1 6
## 〈SCK2306-12-00A〉

1 6 □ □ □ □ □ □

| Symbol No. | Part No. | Part Name | Description | |
|---|---|---|---|---|
| C4 | QER41EM-106 | E CAP | 10 | 25V |
| C5 | QEPA1CM-106 | NP E.CAPACITOR | 10 | 16V |
| C6 | NCT03CH-331 | C CAP | 330P | 50V |
| C7 | NCT03CH-681 | CER.CAPACITOR | 680P | 50V |
| C8 | QER40JM-476 | E CAP | 47 | 6.3V |
| C9 | QER40JM-476 | E CAP | 47 | 6.3V |
| C10 | QER41EM-106 | E CAP | 10 | 25V |
| C11 | QEPA1CM-106 | NP E.CAPACITOR | 10 | 16V |
| C12 | NCT03CH-331 | C CAP | 330P | 50V |
| C13 | NCT03CH-681 | CER.CAPACITOR | 680P | 50V |
| C14 | QER40JM-476 | E CAP | 47 | 6.3V |
| C15 | QER40JM-476 | E CAP | 47 | 6.3V |
| C16 | NCF21EZ-104 | C CAP | 0.10 | 25V |
| C17 | NCF21EZ-104 | C CAP | 0.10 | 25V |
| C18 | NEF11CM-105 | TA E.CAPACITOR | 1.0 | 16V |
| C19 | NCF21EZ-104 | C CAP | 0.10 | 25V |
| C20 | NCF21EZ-104 | C CAP | 0.10 | 25V |
| C21 | NCF21EZ-104 | C CAP | 0.10 | 25V |
| C22 | NCF21EZ-104 | C CAP | 0.10 | 25V |
| S1 | QSRAA22-S01 | ROTARY SWITCH | MIC/AUDIO1 | |
| S2 | QSRAA22-S01 | ROTARY SWITCH | MIC/AUDIO2 | |
| CN1 | SCV0500-001 | CONNECTOR | 30PIN | |
| CN2 | SCV0500-001 | CONNECTOR | 30PIN | |
| CN12 | SCV1766-006 | CONNECTOR | 6PIN | |
| CN13 | SCV1978-L05 | CONNECTOR | 5PIN | |
| CN19 | SCV1978-S12 | CONNECTOR | 12PIN | |
| CN20 | SCV1766-020 | CONNECTOR | 20PIN | |
| CN21 | SCV1978-S10 | CONNECTOR | 10PIN | |
| CN24 | SCV1978-S07 | CONNECTOR | 7PIN | |
| CN25 | SCV1978-S06 | CONNECTOR | 6PIN | |
| CN27 | SCV2019-020 | CONNECTOR | 20PIN | |
| CN28 | SCV2019-020 | CONNECTOR | 20PIN | |
| CN29 | SCV0494-004 | CONNECTOR | 4PIN | |
| CN30 | SCV0494-004 | CONNECTOR | 4PION | |
| CN31 | SCV1766-020 | CONNECTOR | 20PIN | |
| CN32 | SCV1766-010 | CONNECTOR | 10PIN | |
| CN34 | SCV2019-020 | CONNECTOR | 20PIN | |
| CN35 | SCV2019-020 | CONNECTOR | 20PIN | |
| CN48 | SCV1978-S03 | CONNECTOR | 3PIN | |
| CN49 | SCV1978-S02 | CONNECTOR | 2PIN | |
| TP1 | SCV1880-001 | TEST POINT | | |

| Symbol No. | Part No. | Part Name | Description | |
|---|---|---|---|---|
| IC1 | MC74HC165F | I.C.(M) | MOTOROLA | |
| IC2 | MC74HC165F | I.C.(M) | MOTOROLA | |
| D1 | HZ6(2C)L | ZENER DIODE | HITACHI | |
| D2 | HZ3BLL | ZENER DIODE | HITACHI | |
| D3 | HZ6(2C)L | ZENER DIODE | HITACHI | |
| D4 | MA142WA | SI DIODE | MATSUSHITA | |
| D5 | MA142A | SI DIODE | MATSUSHITA | |
| D6 | MA143A | SI DIODE | MATSUSHITA | |
| D7 | MA143A | SI DIODE | MATSUSHITA | |
| D8 | MA143A | SI DIODE | MATSUSHITA | |
| D9 | MA143A | SI DIODE | MATSUSHITA | |
| R1 | NRSA02J-103 | M.G.RESISTOR | 10K | 1/10W |
| R2 | QRD161J-152 | CARBON RESISTOR | 1.5K | 1/6W |
| R3 | NRSA02J-123 | M.G.RESISTOR | 12K | 1/10W |
| R4 | NRSA02J-563 | M.G.RESISTOR | 56K | 1/10W |
| RA1 | NRB151J-223 | RESISTOR ARRAY | 22K | |
| C1 | QETA1EM-108 | E CAP | 1000 | 25V |
| C2 | NCF21EZ-104 | C CAP | 0.10 | 25V |
| C3 | QER40JM-476 | E CAP | 47 | 6.3V |
| C4 | NCF21EZ-104 | C CAP | 0.10 | 25V |
| C5 | NCF21EZ-104 | C CAP | 0.10 | 25V |
| CN14 | SCV1978-S08 | CONNECTOR | 8PIN | |
| CN15 | SCV1978-S05 | CONNECTOR | 5PIN | |
| CN16 | SCV1978-S08 | CONNECTOR | 8PIN | |
| CN17 | SSV1591-S06 | CONNECTOR | 6PIN | |
| CN20 | SCV1766-020 | CONNECTOR | 20PIN | |

## 7.17 CN1 board assembly list 17
## 〈SCK2306-10-00A〉

17□□□□□□□

| Symbol No. | Part No. | Part Name | Description |
|---|---|---|---|
| CN13 | SCV1978-S05 | CONNECTOR | 5PIN |
| JK2 | Refer to the section 5.1 "Color video camera assembly" item No. ⑯. | | 6PIN, RM |

## 7.18 CN2 board assembly list 18
## 〈SCK2306-11-00A〉

18□□□□□□□

| Symbol No. | Part No. | Part Name | Description |
|---|---|---|---|
| R10 | NRSA02J-750 | MGR | 75 1/10W |
| CN26 | SCV1978-L04 | CONNECTOR | 4PIN |
| CN42 | SCV1978-L02 | CONNECTOR | 2PIN |
| JK3 | Refer to the section 5.1 "Color video camera assembly" item No. ⑳. | | VIDEO OUTPUT |
| JK4 | | | GENLOCK INPUT |

## 7.19 SW1 board assembly list 19
## 〈SCK2306-04-00A〉

19□□□□□□□

| Symbol No. | Part No. | Part Name | Description |
|---|---|---|---|
| S7 | SCV0516-A18JB2 | TOGGLE SWITCH | AUTO.SET/WHITE |
| S8 | SCV1639-001 | PUSH SWITCH | VTR.TRIG1 |
| S9 | SCV0337-002 | TOGGLE SWITCH | ZEBRA |
| CN15 | SCV1978-L05 | CONNECTOR | 5PIN |

## 7.20 SW2 board assembly list 20
## 〈SCK2306-05-00A〉

20□□□□□□□

| Symbol No. | Part No. | Part Name | Description |
|---|---|---|---|
| Q1 | 2SK662(QR) | FET | MATSUSHITA |
| LD1 | SLB-26UR5 | LED | ROHM |
| R1 | NRSA02J-332 | M.G.RESISTOR | 3.3K 1/10W |
| R2 | NRSA02J-152 | M.G.RESISTOR | 1.5K 1/10W |
| R3 | NRSA02J-473 | M.G.RESISTOR | 47K 1/10W |
| R4 | NRSA02J-564 | M.G.RESISTOR | 560K 1/10W |
| ⚠S1 | SCV1313-001 | TOGGLE SWITCH | POWER |
| CN11 | SSV1591-L03 | CONNECTOR | 3PIN |
| CN17 | SSV1591-S06 | CONNECTOR | 6PIN |
| CN38 | SCV1978-S02 | CONNECTOR | 2PIN |

## 7.21 SW3 board assembly list 21
## 〈SCK2306-06-00A〉

21□□□□□□□

| Symbol No. | Part No. | Part Name | Description |
|---|---|---|---|
| S2 | SCV1639-001 | PUSH SWITCH | VTR TRIG.2 |
| CN38 | SCV1978-L02 | CONNECTOR | 2PIN |

## 7.22 SW4 board assembly list 22
## 〈SCK2306-07-00A〉 22□□□□□□

| Symbol No. | Part No. | Part Name | Description |
|---|---|---|---|
| R6 | NRSA02J-103 | M.G.RESISTOR | 10K 1/10W |
| R7 | NRSA02J-103 | M.G.RESISTOR | 10K 1/10W |
| C1 | NCF21EZ-104 | C CAP | 0.10 25V |
| S3 | SCV0516-A13HB2 | TOGGLE SWITCH | GAIN |
| S4 | SCV0516-A18JB2 | TOGGLE SWITCH | DISPLAY |
| S5 | SCV0337-002 | TOGGLE SWITCH | MODE |
| S6 | SCV0338-002 | TOGGLE SWITCH | W. BAL |
| CN16 | SCV1978-L08 | CONNECTOR | 8PIN |

## 7.23 SW5 board assembly list 23
## 〈SCK2306-08-00A〉 23□□□□□□

| Symbol No. | Part No. | Part Name | Description |
|---|---|---|---|
| LD2 | GL3HS44 | LED | SHARP |
| S10 | SCV1639-001 | PUSH SWITCH | AUTO SHOOT |
| S11 | SCV1639-001 | PUSH SWITCH | LOLUX |
| S12 | QSS1A13-S01 | SLIDE SWITCH | IRIS OVER/UNDER |
| S13 | QSS1A13-S01 | SLIDE SWITCH | SHUTTER/C.VIEW |
| CN18 | SCV1978-L09 | CONNECTOR | 9PIN |

## 7.24 SW6 board assembly list 24
## 〈SCK2306-09-00A〉 24□□□□□□

| Symbol No. | Part No. | Part Name | Description |
|---|---|---|---|
| R8 | NRSA02J-103 | M.G.RESISTOR | 10K 1/10W |
| R9 | NRSA02J-0R0 | M.G.RESISTOR | 0 1/10W |
| VR1 | QVPB613-203 | TRIM RESISTOR | 20K H.PHASE |
| VR2 | QVPB613-503 | TRIM RESISTOR | 50K SC.PHASE |
| S14 | SCV0403-001 | SLIDE SWITCH | STREO/MONO |
| S15 | SCV0403-001 | SLIDE SWITCH | RET |
| CN12 | SCV1766-006 | CONNECTOR | 6PIN |